DATE 04/20/2009

Columbia County Building Permit

This Permit Must Be Prominently Posted on Premises During Construction

PERMIT
000027755

APPLICANT TRAVIS WILLIAMS PHONE 365-4614

ADDRESS 23488 NE 1ST AVE HIGH SPRINGS FL 32643

OWNER DANIELLA FAZZINO PHONE

ADDRESS 913 SW COLES COURT FT. WHITE FL 32038

CONTRACTOR TRAVIS WILLIAMS PHONE 365-4614

LOCATION OF PROPERTY 47S, TR WILSON SPRINGS ROAD, TR ON COLES COURT, TO THE END DRIVE ON RIGHT

TYPE DEVELOPMENT SFD,UTILITY ESTIMATED COST OF CONSTRUCTION 130700.00

HEATED FLOOR AREA 1607.00 TOTAL AREA 2614.00 HEIGHT STORIES 1

FOUNDATION CONC WALLS FRAMED ROOF PITCH 6/12 FLOOR SLAB

LAND USE & ZONING A-3 MAX. HEIGHT

Minimum Set Back Requirments: STREET-FRONT 30.00 REAR 25.00 SIDE 25.00

NO. EX.D.U. 1 FLOOD ZONE X DEVELOPMENT PERMIT NO.

PARCEL ID 06-7S-16-04145-103 SUBDIVISION COLE'S UNREC

LOT 3 BLOCK PHASE UNIT 0 TOTAL ACRES 10.10

Culvert Permit No.	Culvert Waiver	Contractor's License Number	Applicant/Owner/Contractor	
		CBC1256897		
EXISTING	09-169	BK	HD	N
Driveway Connection	Septic Tank Number	LU & Zoning checked by	Approved for Issuance	New Resident

COMMENTS: NOC OF FILE, ONE FOOT ABOVE THE ROAD, EXISTING MH TO BE REMOVED 45 DAYS AFTER CO IS ISSUED

Check # or Cash 11045

FOR BUILDING & ZONING DEPARTMENT ONLY

(footer/Slab)

Temporary Power _____ date/app. by Foundation _____ date/app. by Monolithic _____ date/app. by

Under slab rough-in plumbing _____ date/app. by Slab _____ date/app. by Sheathing/Nailing _____ date/app. by

Framing _____ date/app. by Insulation _____ date/app. by

Rough-in plumbing above slab and below wood floor _____ date/app. by Electrical rough-in _____ date/app. by

Heat & Air Duct _____ date/app. by Peri. beam (Lintel) _____ date/app. by Pool _____ date/app. by

Permanent power _____ date/app. by C.O. Final _____ date/app. by Culvert _____ date/app. by

Pump pole _____ date/app. by Utility Pole _____ date/app. by M/H tie downs, blocking, electricity and plumbing _____ date/app. by

Reconnection _____ date/app. by RV _____ date/app. by Re-roof _____ date/app. by

BUILDING PERMIT FEE $ 655.00 CERTIFICATION FEE $ 13.07 SURCHARGE FEE $ 13.07

MISC. FEES $ 0.00 ZONING CERT. FEE $ 50.00 FIRE FEE $ 0.00 WASTE FEE $

FLOOD DEVELOPMENT FEE $ FLOOD ZONE FEE $ 25.00 CULVERT FEE $ **TOTAL FEE** 756.14

INSPECTORS OFFICE _____ CLERKS OFFICE CH

NOTICE: IN ADDITION TO THE REQUIREMENTS OF THIS PERMIT, THERE MAY BE ADDITIONAL RESTRICTIONS APPLICABLE TO THIS PROPERTY THAT MAY BE FOUND IN THE PUBLIC RECORDS OF THIS COUNTY. AND THERE MAY BE ADDITIONAL PERMITS REQUIRED FROM OTHER GOVERNMENTAL ENTITIES SUCH AS WATER MANAGEMENT DISTRICTS, STATE AGENCIES, OR FEDERAL AGENCIES.

"WARNING TO OWNER: YOUR FAILURE TO RECORD A NOTICE OF COMMENCEMENT MAY RESULT IN YOUR PAYING TWICE FOR IMPROVEMENTS TO YOUR PROPERTY. IF YOU INTEND TO OBTAIN FINANCING, CONSULT WITH YOUR LENDER OR AN ATTORNEY BEFORE RECORDING YOUR NOTICE OF COMMENCEMENT."

EVERY PERMIT ISSUED SHALL BECOME INVALID UNLESS THE WORK AUTHORIZED BY SUCH PERMIT IS COMMENCED WITHIN 180 DAYS AFTER ITS ISSUANCE, OR IF THE WORK AUTHORIZED BY SUCH PERMIT IS SUSPENDED OR ABANDONED FOR A PERIOD OF 180 DAYS AFTER THE TIME THE WORK IS COMMENCED. A VALID PERMIT RECIEVES AN APPROVED INSPECTION EVERY 180 DAYS. WORK SHALL BE CONSIDERED NOT SUSPENDED, ABANDONED OR INVALID WHEN THE PERMIT HAS RECIEVED AN APPROVED INSPECTION WITHIN 180 DAYS OT THE PREVIOUS INSPECTION.

The Issuance of this Permit Does Not Waive Compliance by Permittee with Deed Restrictions.

NOTICE OF TREATMENT

#27755

Applicator Name: McCall Service

Address: 415 NW 250st Suite 1

City: Newberry

Time: 10:25 Date: 4-22-09

SITE LOCATION

Lot # _____ Block # _____ Permit # 000027755

Subdivision: Cole's Unrec

Address: 913 SW Coles Ct

Name of Chemical Applied: Premise Pro Const Used .05 %

Area Treated: 2614 sq ft 214 LN ft

Gallons Used: 262 gals

Remarks: Mono slab

Applicator - White Permit File - Canary Permit Holder - Pink

M 1043

Columbia County Building Permits Application

Application #_____

Property ID Number 06-7S-16-04145-103 ~~04145-103~~ Septic Permit No. _____

Subdivision Name N/A Coles unrec. @ Wilson Springs Lot 3 Block _____ Unit _____ Phase _____

Construction of Block SFD Cost of Construction 130,000.00

Mobile Home Permit - New or Used (Circle One) Year _____ Length _____ Width _____

Name of the Authorized Person Signing the Permit Travis Williams

Phone 386-365-4614 Fax 386-454-3557

Address 234 NE 1st Ave High Springs FL 32643

Owners Name Daniela Fazzino Phone _____

911 Address 913 SW Coles Court Ft White FL 32038

Relationship to Property Owner Builder Is this Home Replacing an Existing Home Yes/Mobile

Contractors Name Travis C. Williams Phone 386-365-4614

Company Name Innovative Home Builders Fax 386-~~365~~-454-3557

Address 234 NE 1st Ave High Springs FL 32643

Fee Simple Owner Name & Address _____

Bonding Co. Name & Address _____

Architect/Engineer Name & Address _____

Mortgage Lenders Name & Address First Federal Bank of Florida

Driving Directions to the Property take 47 South to Ft white go through light. Take Rt on Wilson Springs Rd. Cont past sharp lf take Rt on Coles Court. Follow to last Driveway, Driveway is straight to end

Lot Size _____ Total Acreage 10.1 Building across lot numbers _____

Actual Distance of Structure from Property Lines – Front/Road ____ Left Side ____ Right Side ____ Rear 100

Number of Stories 1 Heated Floor Area 1607 Total Floor Area 2614 Roof Pitch 6/12

Circle the correct power company – FL Power & Light – Clay Elec. – Suwannee Valley Elec.

Progress Energy – Slash Pine Electric

Do you currently have an Existing Drive or Private Drive or need a Culvert Permit or Culvert Waiver

(Currently using) (Blue Road Sign) (Putting in a Culvert) (No Culvert but do not need a Culvert)

left message w/ Travis 3/30/09

Both Pages Must be Submitted to obtain a Building Permit.

Revised 12-30-08

Columbia County Building Permits Application Application #_____

TIME LIMITATIONS OF *APPLICATIONS*: An application for a permit for any proposed work shall be deemed to have been abandoned 180 days after the date of filing, unless such application has been pursued in good faith or a permit has been issued; except that the building official is authorized to grant one or more extensions of time for additional periods not exceeding 90 days each. The extension shall be requested in writing and justifiable cause demonstrated.

TIME LIMITATIONS OF *PERMITS*: Every permit issued shall become invalid unless the work authorized by such permit is commenced within 180 days after its issuance, or if the work authorized by such permit is suspended or abandoned for a period of 180 days after the time work is commenced. A valid permit receives an approved inspection every 180 days. Work shall be considered not suspended, abandoned or invalid when the permit has received an approved inspection within 180 days of the previous approved inspection.

FLORIDA'S CONSTRUCTION LIEN LAW: Protect Yourself and Your Investment: According to Florida Law, those who work on your property or provide materials, and are not paid-in-full, have a right to enforce their claim for payment against your property. This claim is known as a construction lien. If your contractor fails to pay subcontractors or material suppliers or neglects to make other legally required payments, the people who are owed money may look to your property for payment, even if you have paid your contractor in full. This means if a lien is filed against your property, it could be sold against your will to pay for labor, materials or other services which your contractor may have failed to pay.

NOTICE OF RESPONSIBILITY TO BUILDING PERMITEE: YOU ARE HEREBY NOTIFIED: as the recipient of a building permit from Columbia County, Florida, you will be held responsible to the County for any damage to sidewalks and/or road curbs and gutters, concrete features and structures, together with damage to drainage facilities, removal of sod, major changes to lot grades that result in ponding of water, or other damage to roadway and other public infrastructure facilities caused by you or your contractor, subcontractors, agents or representatives in the construction and/or improvement of the building and lot for which this permit is issued. No certificate of occupancy will be issued until all corrective work to these public infrastructures and facilities has been corrected.

WARNING TO OWNER: YOUR FAILURE TO RECORD A NOTICE OF COMMENCMENT MAY RESULT IN YOU PAYING TWICE FOR IMPROVEMENTS TO YOUR PROPERTY. A NOTICE OF COMMENCEMENT MUST BE RECORDED AND POSTED ON THE JOB SITE BEFORE THE FIRST INSPECTION. IF YOU INTEND TO OBTAIN FINANCING, CONSULT WITH YOUR LENDER OR ATTORNEY BEFORE RECORDING YOUR NOTICE OF COMMENCEMENT.

OWNERS CERTIFICATION: I hereby certify that all the foregoing information is accurate and all work will be done in compliance with all applicable laws and regulating construction and zoning. I further understand the above written responsibilities in Columbia County for obtaining this Building Permit.

X_____
Owners Signature

CONTRACTORS AFFIDAVIT: By my signature I understand and agree that I have informed and provided this written statement to the owner of all the above written responsibilities in Columbia County for obtaining this Building Permit including all application and permit time limitations.

_____
Contractor's Signature (Permitee)

Contractor's License Number CBC-1256897
Columbia County
Competency Card Number 000020

Affirmed under penalty of perjury to by the Contractor and subscribed before me this 16th **day of** March **20**09

Personally known_____ **or Produced Identification** DL

_____ **SEAL:**
State of Florida Notary Signature (For the Contractor)

GALE TEDDER
MY COMMISSION # DD 805686
EXPIRES: July 14, 2012
Bonded Thru Notary Public Underwriters

Both Pages Must be Submitted to obtain a Building Permit.

Revised 12-30-08

AC# 4008667

STATE OF FLORIDA
DEPARTMENT OF BUSINESS AND PROFESSIONAL REGULATION

CBC1256897 09/17/08 080102986

CERTIFIED BUILDING CONTRACTOR
WILLIAMS, TRAVIS CLAYTON
INNOVATIVE HOME BUILDERS OF NORT

IS CERTIFIED under the provisions of Ch.489 FS
Expiration date: AUG 31, 2010 L08091700114

Daniela Fazzino

Parcel ID #06-7S-16-04145-103

BEG AT NW COR OF S1/2 OF NE 1/4, RUN E 676.52 FT, S 649.36 FT, W 676.57 FT, N 651.67 FT TO POB (AKA LOT 3 COLE'S UNR S/D @ WILSON SPGS) ORB 1033- 2566

THIS INSTRUMENT PREPARED BY
AND RETURN TO:
NORTH CENTRAL FLORIDA TITLE, LLC
343 NW COLE TERRACE
SUITE 101
LAKE CITY, FLORIDA 32055

Parcel I.D. #: ***04145-103***
Permit No.

094-0103

Inst.200912003526 Date 3/5/2009 Time.12:55 PM
102 DC,P DeWitt Cason,Columbia County Page 1 of 2 B 1168 P 1565

SPACE ABOVE THIS LINE FOR PROCESSING DATA — *SPACE ABOVE THIS LINE FOR RECORDING DATA*

NOTICE OF COMMENCEMENT

STATE OF FLORIDA
COUNTY OF COLUMBIA

THE UNDERSIGNED hereby gives notice that improvement will be made to certain real property, and in accordance with Chapter 713, Florida Statutes, the following information is provided in this Notice of Commencement. This Notice shall be void and of no force and effect if construction is not commenced within ninety (90) days after recordation.

1. Description of property: (Legal description of property, and street address if available)

   913 SW COLES COURT, FT WHITE, FL 32038
   A PART OF THE S ½ OF THE NE ¼ OF SECTION 6, TOWNSHIP 7 SOUTH, RANGE 16 EAST, COLUMBIA COUNTY, FLORIDA BEING MORE PARTICULARLY DESCRIBED AS FOLLOWS:
   BEGIN AT THE NW CORNER OF SAID S ½ OF THE NE ¼ AND RUN N 87°39'45" E, ALONG THE NORTH LINE THEREOF, 676.52 FEET; THENCE S 01°05'14" E, 649.36 FEET; THENCE S 87°28'02" W, 676.57 FEET TO THE WEST LINE OF SAID NE ¼; THENCE N 01°05'14" W, 651.67 FEET TO THE POINT OF BEGINNING.

   TOGETHER WITH A 60 FOOT INGRESS AND EGRESS EASEMENT, SAID EASEMENT LYING 30 FOOT ON EACH SIDE OF THE FOLLOWING DESCRIBED CENTERLINE:
   COMMENCE AT THE SE CORNER OF SECTION 6, TOWNSHIP 7 SOUTH, RANGE 16 EAST, COLUMBIA COUNTY, FLORIDA AND RUN S 86°45'53" W, ALONG THE SOUTH LINE THEREOF, 561.24 FEET TO THE POINT OF BEGINNING OF SAID CENTERLINE; THENCE N 01°01'11" W, 2512.31 FEET; THENCE N 33°19'52" W, 820.98 FEET; THENCE S 87°28'20" W, 964.53 FEET TO THE POINT OF TERMINATION.

   SUBJECT TO EASEMENTS OF TEN (10) FEET IN WIDTH RUNNING ALONG ALL INTERIOR PARCEL LINES, AND ROAD OR ROAD EASEMENT LINES AND TWENTY (20) FEET IN WIDTH ALONG ALL EXTERIOR PARCEL BOUNDARY LINES FOR THE PURPOSE OF PUBLIC UTILITY UTILIZATION, DRAINAGE, AND/OR INGRESS AND EGRESS.

2. General description of improvement: **CONSTRUCTION OF A SINGLE FAMILY SWELLING**

3. Owner information:
   a. Name and address:
      DANIELA A. FAZZINO
      913 SW COLES COURT, FT WHITE, FL 32038
   b. Interest in property: **Fee Simple**
   c. Name and Address of Fee Simple Titleholder (if other than owner):

4. Contractor: (Name and Address)
   INNOVATIVE HOME BUILDERS OF NORTH FLORIDA
   234 NE 1ST AVENUE, HIGH SPRINGS, FL 32643
   Telephone Number: _____

5. Surety (if any):
   a. Name and Address:
      Telephone Number: _____
   b. Amount of Bond $_____

6. Lender: (Name and Address)
   FIRST FEDERAL BANK OF FLORIDA
   4705 WEST U.S. HWY 90, P.O. BOX 2029, LAKE CITY, FL 32056
   Telephone Number: 755-0600

7. Persons within the State of Florida designated by Owner upon whom notice or other documents may be served as provided by Section 713.13(1)(a)(7), Florida Statutes: (Name and Address)
   N/A

8. In addition to himself, Owner designates the following person(s) to receive a copy of the Lienor's Notice as provided in Section 713.13(1)(b), Florida Statutes: (Name and Address)
   FIRST FEDERAL BANK OF FLORIDA
   4705 WEST U.S. HWY 90, P.O. BOX 2029, LAKE CITY, FL 32056

Telephone Number: 755-0600

9. Expiration date of Notice of Commencement (the expiration date is 1 year from the date of recording unless a different date is specified) _____.

WARNING TO OWNER: ANY PAYMENTS MADE BY THE OWNER AFTER THE EXPIRATION OF THE NOTICE OF COMMENCEMENT ARE CONSIDERED IMPROPER PAYMENTS UNDER CHAPTER 713, PART I, SECTION 713.13, FLORIDA STATUTES, AND CAN RESULT IN YOUR PAYING TWICE FOR IMPROVEMENTS TO YOUR PROPERTY. A NOTICE OF COMMENCEMENT MUST BE RECORDED AND POSTED ON THE JOB SITE BEFORE THE FIRST INSPECTION. IF YOU INTEND TO OBTAIN FINANCING, CONSULT WITH YOUR LENDER OR AN ATTORNEY BEFORE COMMENCING WORK OR RECORDING YOUR NOTICE OF COMMENCEMENT.

Signature of Owner(s) or Owner's Authorized Officer/Director/Partner/Manager:

_____{SEAL} _____{SEAL}
DANIELA A. FAZZINO

The foregoing instrument was acknowledged before me this **27th** day of **February, 2009**, by **DANIELA A. FAZZINO**, who is personally known to me or who has produced *Driver's License* as identification.

_____
Notary Public
My Commission Expires: _____

MARY SANDAGE
MY COMMISSION # DD847494
EXPIRES December 23, 2012
(407) 398-0153 FloridaNotaryService.com

Columbia County Tax Collector

generated on 3/18/2009 2:37:03 PM EDT

Tax Record

Last Update: 3/18/2009 2:39:36 PM EDT

Ad Valorem Taxes and Non-Ad Valorem Assessments

The information contained herein does not constitute a title search and should not be relied on as such.

Account Number	Tax Type	Tax Year
R04145-103	REAL ESTATE	2008

Mailing Address
FAZZINO DANIELA A
913 SW COLE CT
FT WHITE FL 32038

Property Address
913 COLES CT SW FTW

GEO Number
167S06-04145-103

Assessed Value	Exempt Amount	Taxable Value
$104,841.00	See Below	See Below

Exemption Detail
H3 25000
HX 25000

Millage Code
003

Escrow Code
024

Legal Description (click for full description)
06-7S-16 0200/0200 10.10 Acres BEG AT NW COR OF S1/2 OF NE 1/4, RUN E 676.52 FT, S 649.36 FT, W 676.57 FT, N 651.67 FT TO POB (AKA LOT 3 COLE'S UNR S/D @ WILSON SPGS) ORB 1033- 2566

Ad Valorem Taxes

Taxing Authority	Rate	Exemption Amount	Taxable Value	Taxes Levied
BOARD OF COUNTY COMMISSIONERS	7.8910	50,000	$54,841	$432.75
COLUMBIA COUNTY SCHOOL BOARD				
DISCRETIONARY	0.7480	25,000	$79,841	$59.72
LOCAL	5.2220	25,000	$79,841	$416.93
CAPITAL OUTLAY	1.7500	25,000	$79,841	$139.72
SUWANNEE RIVER WATER MGT DIST	0.4399	50,000	$54,841	$24.12
LAKE SHORE HOSPITAL AUTHORITY	2.0160	50,000	$54,841	$110.56
COLUMBIA COUNTY INDUSTRIAL	0.1240	50,000	$54,841	$6.80

Total Millage	18.1909	Total Taxes	$1,190.60

Non-Ad Valorem Assessments

Code	Levying Authority	Amount
FFIR	FIRE ASSESSMENTS	$146.58
GGAR	SOLID WASTE - ANNUAL	$201.00

Total Assessments	$347.58
Taxes & Assessments	$1,538.18

If Paid By	Amount Due
	$0.00

Date Paid	Transaction	Receipt	Item	Amount Paid
11/29/2008	PAYMENT	9971721.0001	2008	$1,476.65

Prior Years Payment History

Prior Year Taxes Due
NO DELINQUENT TAXES

STATE OF FLORIDA
DEPARTMENT OF HEALTH

APPLICATION FOR ONSITE SEWAGE DISPOSAL SYSTEM CONSTRUCTION PERMIT

Permit Application Number _____

PART II - SITE PLAN

Scale: Each block represents 5 feet and 1 inch = 50 feet.

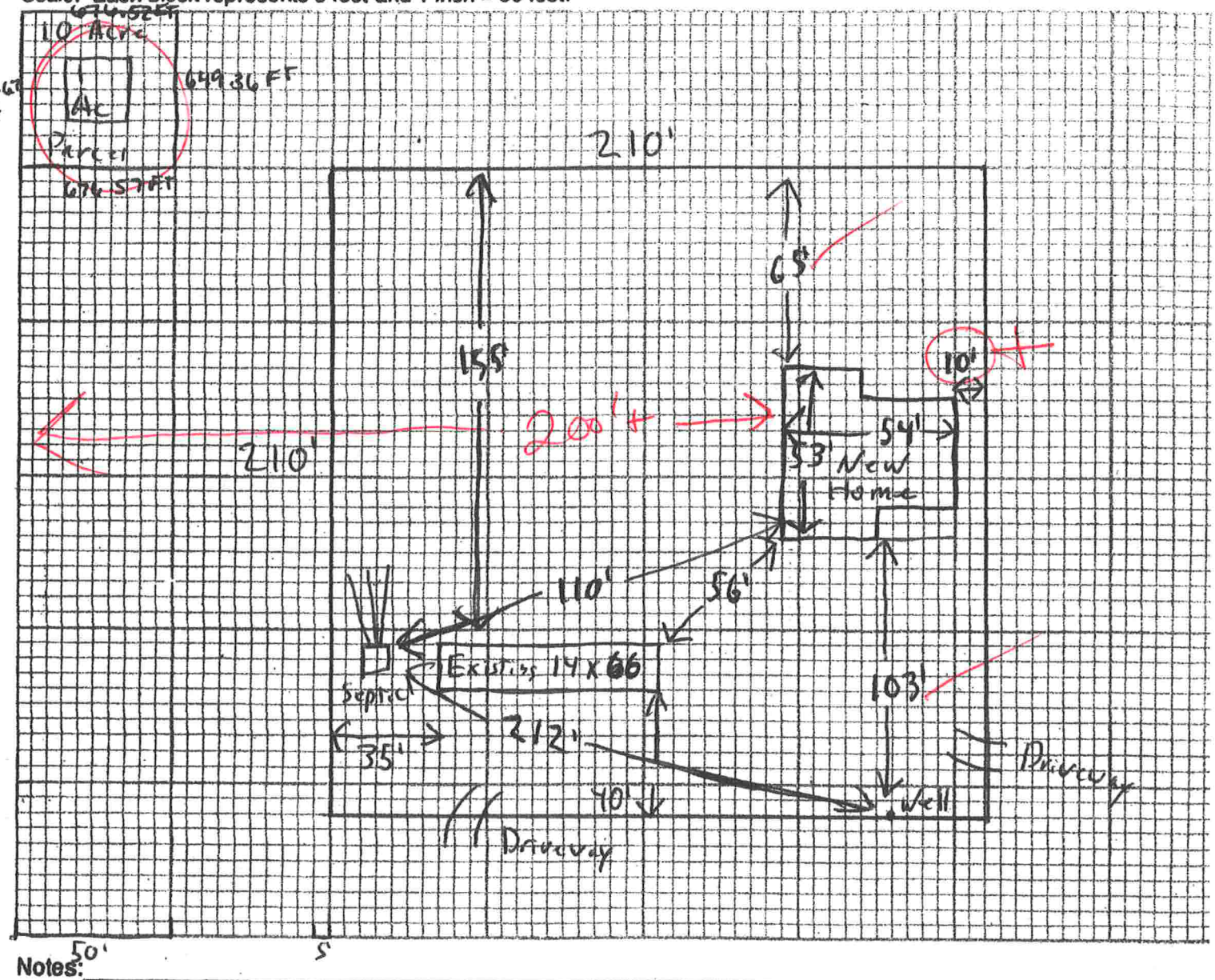

Notes: 1 acre shown out of 10 / All features shown

Site Plan submitted by: _____ Signature _____ Title

Plan Approved _____ Not Approved _____ Date _____

By _____ County Health Depar

ALL CHANGES MUST BE APPROVED BY THE COUNTY HEALTH DEPARTMENT

DH 4015, 10/96 (Replaces HRS-H Form 4015 which may be used)

IMPACT FEE OCCUPANCY AFFIDAVIT

This affidavit is given for the purpose of obtaining an exemption pursuant to Article VIII, Section 8.01, Columbia County Comprehensive Impact Fee Ordinance No. 2007-40, adopted October 18, 2007, as may be amended.

STATE OF FLORIDA
COUNTY OF COLUMBIA

BEFORE ME, the undersigned authority, personally appeared Travis Williams who, after being duly sworn, deposes and says:

1. Except as otherwise stated herein, Affiant has personal knowledge of the facts and matters set forth in this affidavit regarding property identified below as:

(a) Parcel No.: 06-7S-16-04145-103.
(b) Legal description (may be attached): Beg at NW Cor of S1/2 of NE1/4, run E 676.52 ft, S 649.36 ft, W 676.57 ft, N 651.67 ft to POB (AKA Lot 5 Cole's UNR S/D @ Wilson Spgs) ORB 1033-2566.

2. Based upon Affiant's personal knowledge, a non-residential building or a residential dwelling has existed on the above referenced property. Said building or dwelling unit was last occupied on 2/18/09 / Current (date.)

3. This Affidavit is made and given by Affiant with full knowledge that the facts contained herein are accurate and complete, and with full knowledge that the penalties under Florida law for perjury include conviction of a felony of the third degree.

Further Affiant sayeth naught.

Print: Travis C Williams

Address: 234 NE 1st Ave
High Springs FL 32643

SWORN TO AND SUBSCRIBED before me this _____ day of _____, 20__, by _____ who is personally known to me or who has produced _____ as identification.

Notary Public, State of Florida

(NOTARY SEAL)

My Commission Expires:

FORM 1100A-08

FLORIDA ENERGY EFFICIENCY CODE FOR BUILDING CONSTRUCTION

Florida Department of Community Affairs Residential Performance Method A

Project Name:	902052InnovativeHomeBuildersFazzinoRes2007	Builder Name:	Innovative Home Builders
Street:	913 SW Coles Court	Permit Office:	Columbia
City, State, Zip:	Ft. White , FL ,	Permit Number:	27755
Owner:	Fazzino	Jurisdiction:	221000
Design Location:	FL, Gainesville		

1. New construction or existing	New (From Plans)
2. Single family or multiple family	Single-family
3. Number of units, if multiple family	1
4. Number of Bedrooms	3
5. Is this a worst case?	Yes
6. Conditioned floor area (ft²)	1607

7. Windows	Description	Area
a. U-Factor:	Dbl, U=0.30	164.50 ft²
SHGC:	SHGC=0.50	
b. U-Factor:	N/A	ft²
SHGC:		
c. U-Factor:	N/A	ft²
SHGC:		
d. U-Factor:	N/A	ft²
SHGC:		
e. U-Factor:	N/A	ft²
SHGC:		

8. Floor Types	Insulation	Area
a. Slab-On-Grade Edge Insulation	R=0.0	1607.00 ft²
b. N/A	R=	ft²
c. N/A	R=	ft²

9. Wall Types	Insulation	Area
a. Concrete Block - Int Insul, Exterior	R=4.0	1398.00 ft²
b. Frame - Wood, Adjacent	R=13.0	264.75 ft²
c. N/A	R=	ft²
d. N/A	R=	ft²

10. Ceiling Types	Insulation	Area
a. Under Attic (Vented)	R=30.0	1607.00 ft²
b. N/A	R=	ft²
c. N/A	R=	ft²

11. Ducts
a. Sup: Attic Ret: Attic AH: Garage Sup. R= 6, 140 ft²

12. Cooling systems
a. Central Unit — Cap: 33 kBtu/hr, SEER: 14

13. Heating systems
a. Electric Heat Pump — Cap: 33 kBtu/hr, HSPF: 8

14. Hot water systems
a. Electric — Cap: 40 gallons, EF: 0.93

b. Conservation features
None

15. Credits — None

Glass/Floor Area: 0.102

Total As-Built Modified Loads: 30.27
Total Baseline Loads: 36.09

PASS

I hereby certify that the plans and specifications covered by this calculation are in compliance with the Florida Energy Code.

PREPARED BY: _____
DATE: 3/26/09 EVAN BERNSLEY

I hereby certify that this building, as designed, is in compliance with the Florida Energy Code.

OWNER/AGENT: _____
DATE: _____

Review of the plans and specifications covered by this calculation indicates compliance with the Florida Energy Code. Before construction is completed this building will be inspected for compliance with Section 553.908 Florida Statutes.

GREAT SEAL OF THE STATE OF FLORIDA — IN GOD WE TRUST

BUILDING OFFICIAL: _____
DATE: _____

PROJECT

Title:	902052InnovativeHomeBuilde	Bedrooms:	3	Adress Type:	Street Address
Building Type:	FLAsBuilt	Bathrooms:	0	Lot #	
Owner:	Fazzino	Conditioned Area:	1607	SubDivision:	
# of Units:	1	Total Stories:	1	PlatBook:	
Builder Name:	Innovative Home Builders	Worst Case:	Yes	Street:	913 SW Coles Court
Permit Office:		Rotate Angle:	45	County:	Columbia
Jurisdiction:		Cross Ventilation:	No	City, State, Zip:	Ft. White ,
Family Type:	Single-family	Whole House Fan:	No		FL ,
New/Existing:	New (From Plans)				
Comment:					

CLIMATE

√	Design Location	TMY Site	IECC Zone	Design Temp 97.5 %	Design Temp 2.5 %	Int Design Temp Winter	Int Design Temp Summer	Heating Degree Days	Design Moisture	Daily Temp Range
_____	FL, Gainesville	FL_GAINESVILLE_REGI	2	32	92	75	70	1305.5	51	Medium

FLOORS

√	#	Floor Type	Perimeter	R-Value	Area	Tile	Wood	Carpet
_____	1	Slab-On-Grade Edge Insulatio	184 ft	0	1607 ft²	0.3	0.2	0.5

ROOF

√	#	Type	Materials	Roof Area	Gable Area	Roof Color	Solar Absor.	Tested	Deck Insul.	Pitch
_____	1	Hip	Metal	1797 ft²	0 ft²	Dark	0.96	No	0	26.6 deg

ATTIC

√	#	Type	Ventilation	Vent Ratio (1 in)	Area	RBS	IRCC
_____	1	Full attic	Vented	303	1607 ft²	N	N

CEILING

√	#	Ceiling Type	R-Value	Area	Framing Frac	Truss Type
_____	1	Under Attic (Vented)	30	1607 ft²	0.11	Wood

WALLS

√	#	Ornt	Adjacent To	Wall Type	Cavity R-Value	Area	Sheathing R-Value	Framing Fraction	Solar Absor.
_____	1	N	Exterior	Concrete Block - Int Insul	4	481.5 ft²	0	0	0.75
_____	2	S	Exterior	Concrete Block - Int Insul	4	286.5 ft²	0	0	0.75
_____	3	E	Exterior	Concrete Block - Int Insul	4	347.25 ft²	0	0	0.75
_____	4	W	Exterior	Concrete Block - Int Insul	4	282.75 ft²	0	0	0.75
_____	5	N	Garage	Frame - Wood	13	264.75 ft²		0.23	0.01

DOORS

√	#	Ornt	Door Type	Storms	U-Value	Area
_____	1	N	Insulated	None	0.4	7 ft²
_____	2	S	Insulated	None	0.4	20 ft²
_____	3	N	Insulated	None	0.4	20 ft²
_____	4	N	Insulated	None	0.4	7 ft²

WINDOWS

Window orientation below is as entered. Actual orientation is modified by rotate angle shown in "Project" section above.

√	#	Ornt	Frame	Panes	NFRC	U-Factor	SHGC	Storms	Area	Overhang Depth	Overhang Separation	Int Shade	Screening
_____	1	N	Metal	Double (Clear)	Yes	0.3	0.5	N	16 ft²	0 ft 18 in	2 ft 0 in	HERS 2006	None
_____	2	N	Metal	Double (Clear)	Yes	0.3	0.5	N	20 ft²	0 ft 90 in	2 ft 0 in	HERS 2006	None
_____	3	N	Metal	Double (Clear)	Yes	0.3	0.5	N	15 ft²	0 ft 90 in	2 ft 0 in	HERS 2006	None
_____	4	S	Metal	Double (Clear)	Yes	0.3	0.5	N	60 ft²	0 ft 108 in	2 ft 0 in	HERS 2006	None
_____	5	W	Metal	Double (Clear)	Yes	0.3	0.5	N	30 ft²	0 ft 18 in	2 ft 0 in	HERS 2006	None
_____	6	W	Metal	Double (Clear)	Yes	0.3	0.5	N	7.5 ft²	0 ft 18 in	2 ft 0 in	HERS 2006	None
_____	7	W	Metal	Double (Clear)	Yes	0.3	0.5	N	16 ft²	0 ft 18 in	2 ft 0 in	HERS 2006	None

INFILTRATION & VENTING

√	Method	SLA	CFM 50	ACH 50	ELA	EqLA	---- Forced Ventilation ---- Supply CFM	Exhaust CFM	Run Time Fraction	Fan Watts
_____	Default	0.00036	1517	6.30	83.3	156.7	0 cfm	0 cfm	0	0

GARAGE

√	#	Floor Area	Ceiling Area	Exposed Wall Perimeter	Avg. Wall Height	Exposed Wall Insulation
_____	1	528.999996 ft²	528.999996 ft²	60.5 ft	9 ft	11

COOLING SYSTEM

√	#	System Type	Subtype	Efficiency	Capacity	Air Flow	SHR	Ductless
_____	1	Central Unit	Split	SEER: 14	33 kBtu/hr	990 cfm	0.75	

HEATING SYSTEM

√	#	System Type	Subtype	Efficiency	Capacity	Ductless
_____	1	Electric Heat Pump	None	HSPF: 8	33 kBtu/hr	

HOT WATER SYSTEM

√	#	System Type	EF	Cap	Use	SetPnt	Conservation
_____	1	Electric	0.93	40 gal	60 gal	120 deg	None

SOLAR HOT WATER SYSTEM

√	FSEC Cert #	Company Name	System Model #	Collector Model #	Collector Area	Storage Volume	FEF
_____	None	None			ft²		

DUCTS

√	#	---- Supply ---- Location	R-Value	Area	---- Return ---- Location	Area	Leakage Type	Air Handler	CFM 25	Percent Leakage	QN	RLF
_____	1	Attic	6	140 ft²	Attic	100 ft²	Default Leakage	Garage				

TEMPERATURES

Programable Thermostat: N

Ceiling Fans:

	Jan	Feb	Mar	Apr	May	Jun	Jul	Aug	Sep	Oct	Nov	Dec
Cooling	[X]	[X]	[X]	[X]	[X]	[X]	[X]	[X]	[X]	[X]	[X]	[X]
Heating	[X]	[X]	[X]	[X]	[X]	[X]	[X]	[X]	[X]	[X]	[X]	[X]
Venting	[X]	[X]	[X]	[X]	[X]	[X]	[X]	[X]	[X]	[X]	[X]	[X]

Thermostat Schedule: HERS 2006 Reference

Schedule Type		Hours 1	2	3	4	5	6	7	8	9	10	11	12
Cooling (WD)	AM	78	78	78	78	78	78	78	78	78	78	78	78
	PM	78	78	78	78	78	78	78	78	78	78	78	78
Cooling (WEH)	AM	78	78	78	78	78	78	78	78	78	78	78	78
	PM	78	78	78	78	78	78	78	78	78	78	78	78
Heating (WD)	AM	68	68	68	68	68	68	68	68	68	68	68	68
	PM	68	68	68	68	68	68	68	68	68	68	68	68
Heating (WEH)	AM	68	68	68	68	68	68	68	68	68	68	68	68
	PM	68	68	68	68	68	68	68	68	68	68	68	68

FORM 1100A-08

Code Compliance Cheklist

Residential Whole Building Performance Method A - Details

ADDRESS: 913 SW Coles Court Ft. White, FL,	PERMIT #:

INFILTRATION REDUCTION COMPLIANCE CHECKLIST

COMPONENTS	SECTION	REQUIREMENTS FOR EACH PRACTICE	CHECK
Exterior Windows & Doors	N1106.AB.1.1	Maximum: .3 cfm/sq.ft. window area; .5 cfm/sq.ft. door area.	
Exterior & Adjacent Walls	N1106.AB.1.2.1	Caulk, gasket, weatherstrip or seal between: windows/doors & frames, surrounding wall; foundation & wall sole or sill plate; joints between exterior wall panels at corners; utility penetrations; between wall panels & top/bottom plates; between walls and floor. EXCEPTION: Frame walls where a continuous infiltration barrier is installed that extends from, and is sealed to, the foundation to the top plate.	
Floors	N1106.AB.1.2.2	Penetrations/openings > 1/8" sealed unless backed by truss or joint members. EXCEPTION: Frame floors where a continuous infiltration barrier is installed that is sealed to the perimeter, penetrations and seams.	
Ceilings	N1106.AB.1.2.3	Between walls & ceilings; penetrations of ceiling plane to top floor; around shafts, chases, soffits, chimneys, cabinets sealed to continuous air barrier; gaps in gyp board & top plate; attic access. EXCEPTION: Frame ceilings where a continuous infiltration barrier is installed that is sealed at the perimeter, at penetrations and seams.	
Recessed Lighting Fixtures	N1106.AB.1.2.4	Type IC rated with no penetrations, sealed; or Type IC or non-IC rated, installed inside a sealed box with 1/2" clearance & 3" from insulation; or Type IC with < 2.0 cfm from conditioned space, tested.	
Multi-story Houses	N1106.AB.1.2.5	Air barrier on perimeter of floor cavity between floors.	
Additional Infiltration reqts	N1106.AB.1.3	Exhaust fans vented to outdoors, dampers; combustion space heaters comply with NFPA, have combustion air.	

OTHER PRESCRIPTIVE MEASURES (must be met or exceeded by all residences.)

COMPONENTS	SECTION	REQUIREMENTS	CHECK
Water Heaters	N1112.AB.3	Comply with efficiency requirements in Table N112.ABC.3. Switch or clearly marked circuit breaker (electric) or cutoff (gas) must be provided. External or built-in heat trap required.	
Swimming Pools & Spas	N1112.AB.2.3	Spas & heated pools must have covers (except solar heated). Non-commercial pools must have a pump timer. Gas spa & pool heaters must have a minimum thermal efficiency of 78%. Heat pump pool heaters shall have a minimum COP of 4.0.	
Shower heads	N1112.AB.2.4	Water flow must be restricted to no more than 2.5 gallons per minute at 80 PSIG.	
Air Distribution Systems	N1110.AB	All ducts, fittings, mechanical equipment and plenum chambers shall be mechanically attached, sealed, insulated and installed in accordance with the criteria of Section N1110.AB. Ducts in unconditioned attics: R-6 min. insulation.	
HVAC Controls	N1107.AB.2	Separate readily accessible manual or automatic thermostat for each system.	
Insulation	N1104.AB.1 N1102.B.1.1	Ceilings-Min. R-19. Common walls-frame R-11 or CBS R-3 both sides. Common ceiling & floors R-11.	

ENERGY PERFORMANCE LEVEL (EPL) DISPLAY CARD

ESTIMATED ENERGY PERFORMANCE INDEX* = 84

The lower the EnergyPerformance Index, the more efficient the home.

1. New construction or existing	New (From Plans)
2. Single family or multiple family	Single-family
3. Number of units, if multiple family	1
4. Number of Bedrooms	3
5. Is this a worst case?	Yes
6. Conditioned floor area (ft²)	1607

7. Windows**	Description	Area
a. U-Factor:	Dbl, U=0.30	164.50 ft²
SHGC:	SHGC=0.50	
b. U-Factor:	N/A	ft²
SHGC:		
c. U-Factor:	N/A	ft²
SHGC:		
d. U-Factor:	N/A	ft²
SHGC:		
e. U-Factor:	N/A	ft²
SHGC:		

8. Floor Types	Insulation	Area
a. Slab-On-Grade Edge Insulation	R=0.0	1607.00 ft²
b. N/A	R=	ft²
c. N/A	R=	ft²

9. Wall Types	Insulation	Area
a. Concrete Block - Int Insul, Exterior	R=4.0	1398.00 ft²
b. Frame - Wood, Adjacent	R=13.0	264.75 ft²
c. N/A	R=	ft²
d. N/A	R=	ft²

10. Ceiling Types	Insulation	Area
a. Under Attic (Vented)	R=30.0	1607.00 ft²
b. N/A	R=	ft²
c. N/A	R=	ft²

11. Ducts
a. Sup: Attic Ret: Attic AH: Garage Sup. R= 6, 140 ft²

12. Cooling systems
a. Central Unit — Cap: 33 kBtu/hr, SEER: 14

13. Heating systems
a. Electric Heat Pump — Cap: 33 kBtu/hr, HSPF: 8

14. Hot water systems
a. Electric — Cap: 40 gallons, EF: 0.93

b. Conservation features
None

15. Credits — None

I certify that this home has complied with the Florida Energy Efficiency Code for Building Construction through the above energy saving features which will be installed (or exceeded) in this home before final inspection. Otherwise, a new EPL Display Card will be completed based on installed Code compliant features.

Builder Signature: _____ Date: _____

Address of New Home: _____ City/FL Zip: _____

*Note: The home's estimated Energy Performance Index is only available through the EnergyGauge USA - FlaRes2008 computer program. This is not a Building Energy Rating. If your Index is below 100, your home may qualify for incentives if you obtain a Florida Energy Gauge Rating. Contact the Energy Gauge Hotline at (321) 638-1492 or see the Energy Gauge web site at energygauge.com for information and a list of certified Raters. For information about Florida's Energy Efficiency Code for Building Construction, contact the Department of Community Affairs at (850) 487-1824.

**Label required by Section 13-104.4.5 of the Florida Building Code, Building, or Section B2.1.1 of Appendix G of the Florida Building Code, Residential, if not DEFAULT.

Residential System Sizing Calculation

Summary

Fazzino
913 SW Coles Court
Ft. White, FL

Project Title:
902052InnovativeHomeBuildersFazzinoResMANJ

Class 3 Rating
Registration No. 0
Climate: North

3/26/2009

Location for weather data: Gainesville - Defaults: Latitude(29) Altitude(152 ft.) Temp Range(M)
Humidity data: Interior RH (50%) Outdoor wet bulb (77F) Humidity difference(54gr.)

Winter design temperature	33	F	Summer design temperature	92	F
Winter setpoint	70	F	Summer setpoint	75	F
Winter temperature difference	37	F	Summer temperature difference	17	F
Total heating load calculation	**27651**	**Btuh**	**Total cooling load calculation**	**23852**	**Btuh**
Submitted heating capacity	% of calc	Btuh	Submitted cooling capacity	% of calc	Btuh
Total (Electric Heat Pump)	119.3	33000	Sensible (SHR = 0.75)	130.6	24750
Heat Pump + Auxiliary(0.0kW)	119.3	33000	Latent	168.4	8250
			Total (Electric Heat Pump)	138.4	33000

WINTER CALCULATIONS

Winter Heating Load (for 1607 sqft)

Load component			Load	
Window total	165	sqft	1826	Btuh
Wall total	1438	sqft	7387	Btuh
Door total	54	sqft	699	Btuh
Ceiling total	1607	sqft	1894	Btuh
Floor total	184	sqft	8033	Btuh
Infiltration	193	cfm	7811	Btuh
Duct loss			0	Btuh
Subtotal			**27651**	**Btuh**
Ventilation	0	cfm	0	Btuh
TOTAL HEAT LOSS			**27651**	**Btuh**

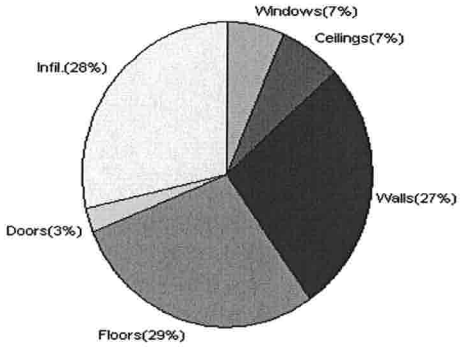

SUMMER CALCULATIONS

Summer Cooling Load (for 1607 sqft)

Load component			Load	
Window total	165	sqft	6651	Btuh
Wall total	1438	sqft	3447	Btuh
Door total	54	sqft	529	Btuh
Ceiling total	1607	sqft	2661	Btuh
Floor total			0	Btuh
Infiltration	101	cfm	1884	Btuh
Internal gain			3780	Btuh
Duct gain			0	Btuh
Sens. Ventilation	0	cfm	0	Btuh
Total sensible gain			**18952**	**Btuh**
Latent gain(ducts)			0	Btuh
Latent gain(infiltration)			3700	Btuh
Latent gain(ventilation)			0	Btuh
Latent gain(internal/occupants/other)			1200	Btuh
Total latent gain			**4900**	**Btuh**
TOTAL HEAT GAIN			**23852**	**Btuh**

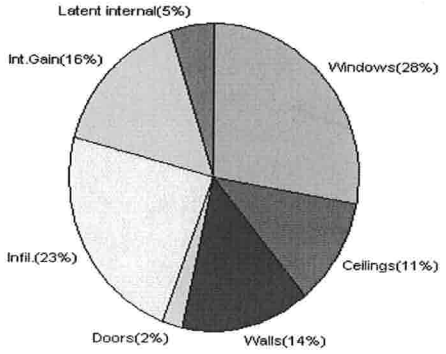

For Florida residences only

EnergyGauge® System Sizing
PREPARED BY: _____
DATE: 3/26/09 EVAN BEAMSLEY

System Sizing Calculations - Winter

Residential Load - Whole House Component Details

Fazzino
913 SW Coles Court
Ft. White, FL

Project Title:
902052InnovativeHomeBuildersFazzinoResMANJ

Class 3 Rating
Registration No. 0
Climate: North

Reference City: Gainesville (Defaults) Winter Temperature Difference: 37.0 F

3/26/2009

This calculation is for Worst Case. The house has been rotated 315 degrees.

Component Loads for Whole House

Window	Panes/SHGC/Frame/U	Orientation	Area(sqft) X	HTM=	Load
1	2, SHGC=0.5, Metal, 0.30	NW	16.0	11.1	178 Btuh
2	2, SHGC=0.5, Metal, 0.30	NW	20.0	11.1	222 Btuh
3	2, SHGC=0.5, Metal, 0.30	NW	15.0	11.1	166 Btuh
4	2, SHGC=0.5, Metal, 0.30	SE	60.0	11.1	666 Btuh
5	2, SHGC=0.5, Metal, 0.30	SW	30.0	11.1	333 Btuh
6	2, SHGC=0.5, Metal, 0.30	SW	7.5	11.1	83 Btuh
7	2, SHGC=0.5, Metal, 0.30	SW	16.0	11.1	178 Btuh
	Window Total		165(sqft)		1826 Btuh
Walls	Type	R-Value	Area X	HTM=	Load
1	Concrete Blk,Hollow - Ext(0.15)	4.0	1179	5.5	6537 Btuh
2	Frame - Wood - Adj(0.09)	13.0	259	3.3	851 Btuh
	Wall Total		1438		7387 Btuh
Doors	Type		Area X	HTM=	Load
1	Insulated - Adjacent		20	12.9	259 Btuh
2	Insulated - Exterior		20	12.9	259 Btuh
3	Insulated - Exterior		14	12.9	181 Btuh
	Door Total		54		699Btuh
Ceilings	Type/Color/Surface	R-Value	Area X	HTM=	Load
1	Vented Attic/D/Shin)	30.0	1607	1.2	1894 Btuh
	Ceiling Total		1607		1894Btuh
Floors	Type	R-Value	Size X	HTM=	Load
1	Slab On Grade	0	184.0 ft(p)	43.7	8033 Btuh
	Floor Total		184		8033 Btuh
			Zone Envelope Subtotal:		19840 Btuh
Infiltration	Type	ACH X	Zone Volume	CFM=	
	Natural	0.80	14463	192.8	7811 Btuh
Ductload	Partially sealed, R6.0, Supply(Attic), Return(Attic)			(DLM of 0.00)	0 Btuh
Zone #1			**Sensible Zone Subtotal**		**27651 Btuh**

Manual J Winter Calculations

Residential Load - Component Details (continued)

Fazzino
913 SW Coles Court
Ft. White, FL

Project Title:
902052InnovativeHomeBuildersFazzinoResMANJ

Class 3 Rating
Registration No. 0
Climate: North

3/26/2009

WHOLE HOUSE TOTALS

	Subtotal Sensible	27651 Btuh
	Ventilation Sensible	0 Btuh
	Total Btuh Loss	27651 Btuh

Key: Window types (SHGC - Shading coefficient of glass as SHGC numerical value or as clear or tint)
(Frame types - metal, wood or insulated metal)
(U - Window U-Factor or 'DEF' for default)
(HTM - ManualJ Heat Transfer Multiplier)
Key: Floor size (perimeter(p) for slab-on-grade or area for all other floor types)

For Florida residences only

System Sizing Calculations - Winter

Residential Load - Room by Room Component Details

Fazzino
913 SW Coles Court
Ft. White, FL

Project Title:
902052InnovativeHomeBuildersFazzinoResMANJ

Class 3 Rating
Registration No. 0
Climate: North

Reference City: Gainesville (Defaults) Winter Temperature Difference: 37.0 F

3/26/2009

This calculation is for Worst Case. The house has been rotated 315 degrees.

Component Loads for Zone #1: Main

Window	Panes/SHGC/Frame/U	Orientation	Area(sqft) X	HTM=	Load
1	2, SHGC=0.5, Metal, 0.30	NW	16.0	11.1	178 Btuh
2	2, SHGC=0.5, Metal, 0.30	NW	20.0	11.1	222 Btuh
3	2, SHGC=0.5, Metal, 0.30	NW	15.0	11.1	166 Btuh
4	2, SHGC=0.5, Metal, 0.30	SE	60.0	11.1	666 Btuh
5	2, SHGC=0.5, Metal, 0.30	SW	30.0	11.1	333 Btuh
6	2, SHGC=0.5, Metal, 0.30	SW	7.5	11.1	83 Btuh
7	2, SHGC=0.5, Metal, 0.30	SW	16.0	11.1	178 Btuh
	Window Total		165(sqft)		1826 Btuh
Walls	Type	R-Value	Area X	HTM=	Load
1	Concrete Blk,Hollow - Ext(0.15)	4.0	1179	5.5	6537 Btuh
2	Frame - Wood - Adj(0.09)	13.0	259	3.3	851 Btuh
	Wall Total		1438		7387 Btuh
Doors	Type		Area X	HTM=	Load
1	Insulated - Adjacent		20	12.9	259 Btuh
2	Insulated - Exterior		20	12.9	259 Btuh
3	Insulated - Exterior		14	12.9	181 Btuh
	Door Total		54		699Btuh
Ceilings	Type/Color/Surface	R-Value	Area X	HTM=	Load
1	Vented Attic/D/Shin)	30.0	1607	1.2	1894 Btuh
	Ceiling Total		1607		1894Btuh
Floors	Type	R-Value	Size X	HTM=	Load
1	Slab On Grade	0	184.0 ft(p)	43.7	8033 Btuh
	Floor Total		184		8033 Btuh
			Zone Envelope Subtotal:		19840 Btuh
Infiltration	Type	ACH X	Zone Volume	CFM=	
	Natural	0.80	14463	192.8	7811 Btuh
Ductload	Partially sealed, R6.0, Supply(Attic), Return(Attic)			(DLM of 0.00)	0 Btuh
Zone #1			**Sensible Zone Subtotal**		**27651 Btuh**

Manual J Winter Calculations

Residential Load - Component Details (continued)

Fazzino
913 SW Coles Court
Ft. White, FL

Project Title:
902052InnovativeHomeBuildersFazzinoResMANJ

Class 3 Rating
Registration No. 0
Climate: North

3/26/2009

WHOLE HOUSE TOTALS

	Subtotal Sensible	27651 Btuh
	Ventilation Sensible	0 Btuh
	Total Btuh Loss	27651 Btuh

Key: Window types (SHGC - Shading coefficient of glass as SHGC numerical value or as clear or tint)
(Frame types - metal, wood or insulated metal)
(U - Window U-Factor or 'DEF' for default)
(HTM - ManualJ Heat Transfer Multiplier)
Key: Floor size (perimeter(p) for slab-on-grade or area for all other floor types)

For Florida residences only

System Sizing Calculations - Summer

Residential Load - Whole House Component Details

Fazzino
913 SW Coles Court
Ft. White, FL

Project Title:
902052InnovativeHomeBuildersFazzinoResMANJ

Class 3 Rating
Registration No. 0
Climate: North

Reference City: Gainesville (Defaults) Summer Temperature Difference: 17.0 F 3/26/2009

This calculation is for Worst Case. The house has been rotated 315 degrees.

Component Loads for Whole House

Window	Type* Pn/SHGC/U/InSh/ExSh/IS	Ornt	Overhang Len	Overhang Hgt	Window Area(sqft) Gross	Shaded	Unshaded	HTM Shaded	HTM Unshaded	Load
1	2, SHGC=0.5, 0.30, None,N,N	NW	1.5ft	6ft.	16.0	0.0	16.0	16	39	622 Btuh
2	2, SHGC=0.5, 0.30, None,N,N	NW	7.5ft	8ft.	20.0	0.0	20.0	16	39	777 Btuh
3	2, SHGC=0.5, 0.30, None,N,N	NW	7.5ft	7ft.	15.0	0.0	15.0	16	39	583 Btuh
4	2, SHGC=0.5, 0.30, None,N,N	SE	9ft.	7ft.	60.0	60.0	0.0	16	41	941 Btuh
5	2, SHGC=0.5, 0.30, None,N,N	SW	1.5ft	7ft.	30.0	3.1	26.9	16	41	1143 Btuh
6	2, SHGC=0.5, 0.30, None,N,N	SW	1.5ft	3.5ft	7.5	2.6	4.9	16	41	240 Btuh
7	2, SHGC=0.5, 0.30, None,N,N	SW	1.5ft	6ft.	16.0	2.1	13.9	16	41	599 Btuh
	Excursion									1745 Btuh
	Window Total				165 (sqft)					6651 Btuh

Walls	Type	R-Value/U-Value	Area(sqft)	HTM	Load
1	Concrete Blk,Hollow - Ext	4.0/0.15	1178.5	2.6	3056 Btuh
2	Frame - Wood - Adj	13.0/0.09	259.0	1.5	391 Btuh
	Wall Total		1438 (sqft)		3447 Btuh

Doors	Type	Area (sqft)	HTM	Load
1	Insulated - Adjacent	20.0	9.8	196 Btuh
2	Insulated - Exterior	20.0	9.8	196 Btuh
3	Insulated - Exterior	14.0	9.8	137 Btuh
	Door Total	54 (sqft)		529 Btuh

Ceilings	Type/Color/Surface	R-Value	Area(sqft)	HTM	Load
1	Vented Attic/DarkShingle	30.0	1607.0	1.7	2661 Btuh
	Ceiling Total		1607 (sqft)		2661 Btuh

Floors	Type	R-Value	Size	HTM	Load
1	Slab On Grade	0.0	184 (ft(p))	0.0	0 Btuh
	Floor Total		184.0 (sqft)		0 Btuh

	Zone Envelope Subtotal:	13288 Btuh

Infiltration	Type	ACH	Volume(cuft)	CFM=	Load
	SensibleNatural	0.42	14463	101.2	1884 Btuh

Internal gain	Occupants	Btuh/occupant		Appliance	Load
	6	X 230	+	2400	3780 Btuh

Duct load	Partially sealed, R6.0, Supply(Attic), Return(Attic) DGM = 0.00	0.0 Btuh
	Sensible Zone Load	**18952 Btuh**

Manual J Summer Calculations

Residential Load - Component Details (continued)

Fazzino
913 SW Coles Court
Ft. White, FL

Project Title:
902052InnovativeHomeBuildersFazzinoResMANJ

Class 3 Rating
Registration No. 0
Climate: North

3/26/2009

WHOLE HOUSE TOTALS

	Sensible Envelope Load All Zones	**18952**	**Btuh**
	Sensible Duct Load	0	Btuh
	Total Sensible Zone Loads	**18952**	**Btuh**
	Sensible ventilation	0	Btuh
	Blower	0	Btuh
Whole House	**Total sensible gain**	**18952**	**Btuh**
Totals for Cooling	Latent infiltration gain (for 54 gr. humidity difference)	3700	Btuh
	Latent ventilation gain	0	Btuh
	Latent duct gain	0	Btuh
	Latent occupant gain (6 people @ 200 Btuh per person)	1200	Btuh
	Latent other gain	0	Btuh
	Latent total gain	**4900**	**Btuh**
	TOTAL GAIN	**23852**	**Btuh**

*Key: Window types (Pn - Number of panes of glass)
(SHGC - Shading coefficient of glass as SHGC numerical value or as clear or tint)
(U - Window U-Factor or 'DEF' for default)
(InSh - Interior shading device: none(N), Blinds(B), Draperies(D) or Roller Shades(R))
(ExSh - Exterior shading device: none(N) or numerical value)
(BS - Insect screen: none(N), Full(F) or Half(H))
(Ornt - compass orientation)

For Florida residences only

System Sizing Calculations - Summer

Residential Load - Room by Room Component Details

Fazzino
913 SW Coles Court
Ft. White, FL

Project Title:
902052InnovativeHomeBuildersFazzinoResMANJ

Class 3 Rating
Registration No. 0
Climate: North

Reference City: Gainesville (Defaults) Summer Temperature Difference: 17.0 F 3/26/2009

This calculation is for Worst Case. The house has been rotated 315 degrees.

Component Loads for Zone #1: Main

Window	Type* Pn/SHGC/U/InSh/ExSh/IS	Ornt	Overhang Len	Overhang Hgt	Window Area(sqft) Gross	Shaded	Unshaded	HTM Shaded	HTM Unshaded	Load
1	2, SHGC=0.5, 0.30, None,N,N	NW	1.5ft	6ft.	16.0	0.0	16.0	16	39	622 Btuh
2	2, SHGC=0.5, 0.30, None,N,N	NW	7.5ft	8ft.	20.0	0.0	20.0	16	39	777 Btuh
3	2, SHGC=0.5, 0.30, None,N,N	NW	7.5ft	7ft.	15.0	0.0	15.0	16	39	583 Btuh
4	2, SHGC=0.5, 0.30, None,N,N	SE	9ft.	7ft.	60.0	60.0	0.0	16	41	941 Btuh
5	2, SHGC=0.5, 0.30, None,N,N	SW	1.5ft	7ft.	30.0	3.1	26.9	16	41	1143 Btuh
6	2, SHGC=0.5, 0.30, None,N,N	SW	1.5ft	3.5ft	7.5	2.6	4.9	16	41	240 Btuh
7	2, SHGC=0.5, 0.30, None,N,N	SW	1.5ft	6ft.	16.0	2.1	13.9	16	41	599 Btuh
	Excursion									1745 Btuh
	Window Total				165 (sqft)					6651 Btuh

Walls	Type	R-Value/U-Value	Area(sqft)	HTM	Load
1	Concrete Blk,Hollow - Ext	4.0/0.15	1178.5	2.6	3056 Btuh
2	Frame - Wood - Adj	13.0/0.09	259.0	1.5	391 Btuh
	Wall Total		1438 (sqft)		3447 Btuh

Doors	Type	Area (sqft)	HTM	Load
1	Insulated - Adjacent	20.0	9.8	196 Btuh
2	Insulated - Exterior	20.0	9.8	196 Btuh
3	Insulated - Exterior	14.0	9.8	137 Btuh
	Door Total	54 (sqft)		529 Btuh

Ceilings	Type/Color/Surface	R-Value	Area(sqft)	HTM	Load
1	Vented Attic/DarkShingle	30.0	1607.0	1.7	2661 Btuh
	Ceiling Total		1607 (sqft)		2661 Btuh

Floors	Type	R-Value	Size	HTM	Load
1	Slab On Grade	0.0	184 (ft(p))	0.0	0 Btuh
	Floor Total		184.0 (sqft)		0 Btuh

	Zone Envelope Subtotal:	13288 Btuh

Infiltration	Type	ACH	Volume(cuft)	CFM=	Load
	SensibleNatural	0.42	14463	101.2	1884 Btuh

Internal gain	Occupants	Btuh/occupant	Appliance	Load
	6	X 230 +	2400	3780 Btuh

Duct load	Partially sealed, R6.0, Supply(Attic), Return(Attic) DGM = 0.00	0.0 Btuh
	Sensible Zone Load	**18952 Btuh**

Manual J Summer Calculations

Residential Load - Component Details (continued)

Fazzino
913 SW Coles Court
Ft. White, FL

Project Title:
902052InnovativeHomeBuildersFazzinoResMANJ

Class 3 Rating
Registration No. 0
Climate: North

3/26/2009

WHOLE HOUSE TOTALS

	Sensible Envelope Load All Zones	**18952**	**Btuh**
	Sensible Duct Load	0	Btuh
	Total Sensible Zone Loads	**18952**	**Btuh**
	Sensible ventilation	0	Btuh
	Blower	0	Btuh
Whole House	**Total sensible gain**	**18952**	**Btuh**
Totals for Cooling	Latent infiltration gain (for 54 gr. humidity difference)	3700	Btuh
	Latent ventilation gain	0	Btuh
	Latent duct gain	0	Btuh
	Latent occupant gain (6 people @ 200 Btuh per person)	1200	Btuh
	Latent other gain	0	Btuh
	Latent total gain	**4900**	**Btuh**
	TOTAL GAIN	**23852**	**Btuh**

*Key: Window types (Pn - Number of panes of glass)
(SHGC - Shading coefficient of glass as SHGC numerical value or as clear or tint)
(U - Window U-Factor or 'DEF' for default)
(InSh - Interior shading device: none(N), Blinds(B), Draperies(D) or Roller Shades(R))
(ExSh - Exterior shading device: none(N) or numerical value)
(BS - Insect screen: none(N), Full(F) or Half(H))
(Ornt - compass orientation)

For Florida residences only

Residential Window Diversity

MidSummer

Fazzino
913 SW Coles Court
Ft. White, FL

Project Title:
902052InnovativeHomeBuildersFazzinoResMANJ

Class 3 Rating
Registration No. 0
Climate: North

3/26/2009

Weather data for: Gainesville - Defaults

Summer design temperature	92 F	Average window load for July	4731 Btuh
Summer setpoint	75 F	Peak window load for July	7896 Btuh
Summer temperature difference	17 F	Excusion limit(130% of Ave.)	6150 Btuh
Latitude	29 North	Window excursion (July)	1745 Btuh

WINDOW Average and Peak Loads

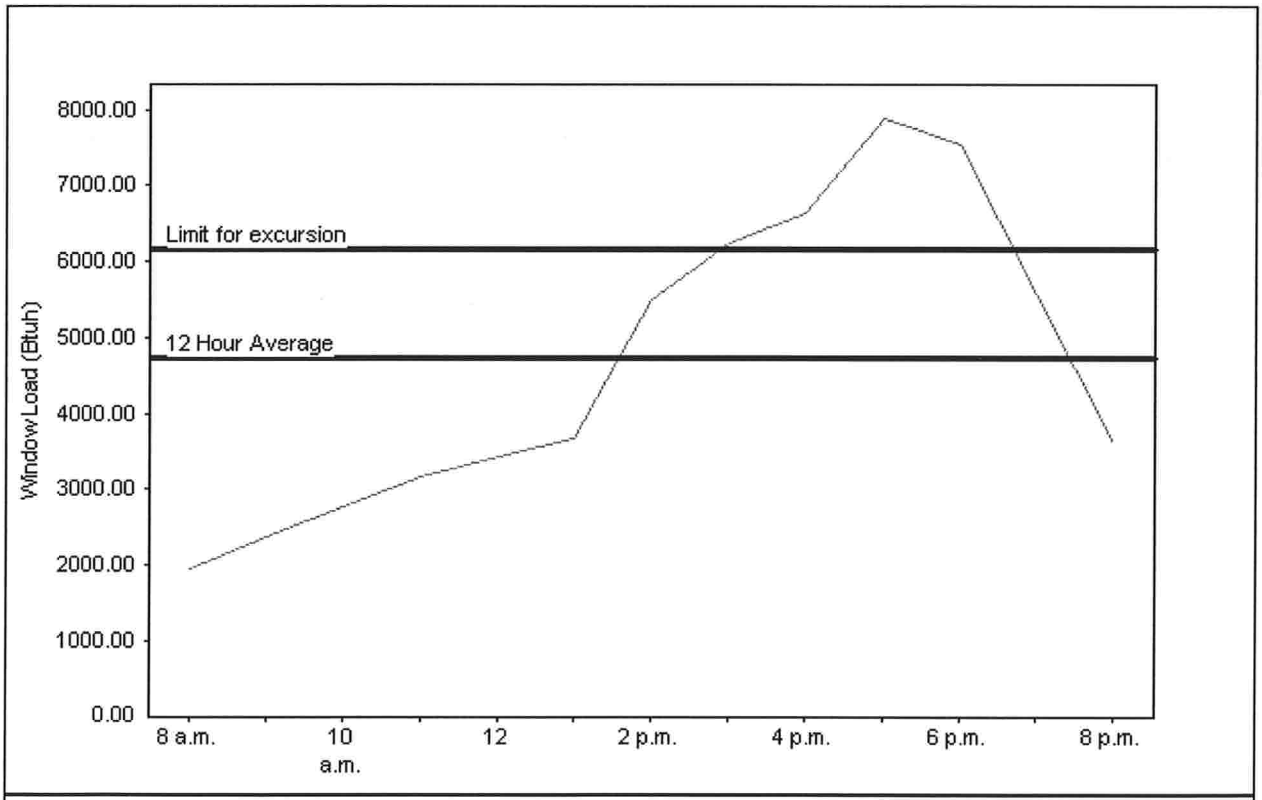

Total July Window Load(Radiation and conduction)

This application has glass areas that produce large heat gains for part of the day. Variable air volume devices are required to overcome spikes in solar gain for one or more rooms. Install a zoned system or provide zone control for problem rooms. Single speed equipment may not be suitable for the application.

EnergyGauge® System Sizing for Florida residences only
PREPARED BY: _____
DATE: 3/26/09 ISRAN BERNSLEY

EnergyGauge® FLR2PB v4.1

Attn: Paul

STATE OF FLORIDA
DEPARTMENT OF HEALTH

09-0169-E

APPLICATION FOR ONSITE SEWAGE DISPOSAL SYSTEM CONSTRUCTION PERMIT

Permit Application Number _____

PART II - SITE PLAN

Scale: Each block represents 5 feet and 1 inch = 50 feet.

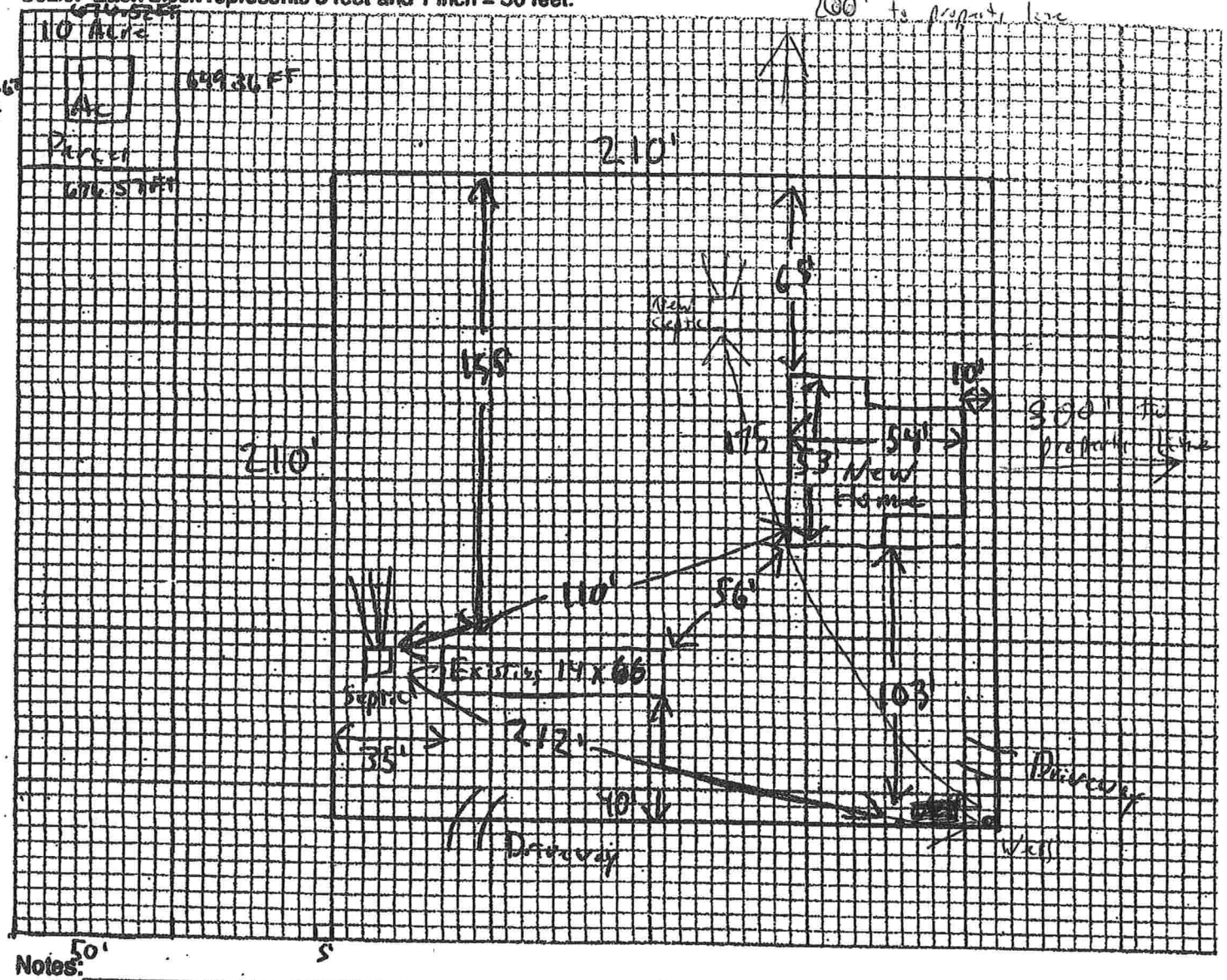

Notes:

1 acre shown out of 10 / All features shown

Site Plan submitted by: _____ Signature

AGENT Title

Plan Approved X Not Approved

APPROVED

Date 4/20/9

By _____

Columbia CHD County Health Depar

ALL CHANGES MUST BE APPROVED BY THE COUNTY HEALTH DEPARTMENT

DH 4015, 10/98 (Replaces HRS-H Form 4015 which may be used)

COLUMBIA COUNTY BUILDING DEPARTMENT
RESIDENTIAL CHECK LIST REQUIRMENTS

MINIMUM PLAN REQUIREMENTS FOR THE FLORIDA BUILDING CODE RESIDENTIAL 2007 ONE (1) AND TWO (2) FAMILY DWELLINGS

ALL REQUIREMENTS ARE SUBJECT TO CHANGE

ALL BUILDING PLANS MUST INDICATE COMPLIANCE with the Current 2007 FLORIDA BUILDING CODES RESIDENTIAL. ALL PLANS OR DRAWINGS SHALL PROVIDE CALCULATIONS AND DETAILS THAT HAVE THE SEAL AND SIGNATURE OF A CERTIFIED ARCHITECT OR ENGINEER REGISTERED IN THE STATE OF FLORIDA, OR ALTERNATE METHODOLOGIES, APPROVED BY THE STATE OF FLORIDA BUILDING COMMISSION FOR ONE-AND-TWO FAMILY DWELLINGS.

FOR DESIGN PURPOSES THE FOLLOWING BASIC WIND SPEEDS ARE PER FIGURE R301.2(4) of the FLORIDA BUILDING CODES RESIDENTIAL (Florida Wind speed map) **SHALL BE USED.**

WIND SPEED LINE SHALL BE DEFINED AS FOLLOWS: THE CENTERLINE OF INTERSTATE 75.

ALL BUILDINGS CONSTRUCTED EAST OF SAID LINE SHALL BE -------- 100 MPH
ALL BUILDINGS CONSTRUCTED WEST OF SAID LINE SHALL BE --------110 MPH
NO AREA IN COLUMBIA COUNTY IS IN A WIND BORNE DEBRIS REGION

	GENERAL REQUIREMENTS: APPLICANT – PLEASE CHECK ALL APPLICABLE BOXES BEFORE SUBMITTAL			Items to Include- Each Box shall be Circled as Applicable		
				Yes	No	N/A
1	Two (2) complete sets of plans containing the following:			✓✓		
2	All drawings must be clear, concise, drawn to scale, details that are not used shall be marked void			✓✓		
3	Condition space (Sq. Ft.) 1607		Total (Sq. Ft.) under roof 2614	IIIIIIII	IIIIIIII	IIIII

Designers name and signature shall be on all documents and a licensed architect or engineer, signature and official embossed seal shall be affixed to the plans and documents as per the FLORIDA BUILDING CODES RESIDENTIAL R101.2.1

Site Plan information including:

4	Dimensions of lot or parcel of land	✓✓		
5	Dimensions of all building set backs	✓✓		
6	Location of all other structures (include square footage of structures) on parcel, existing or proposed well and septic tank and all utility easements.	✓✓		
7	Provide a full legal description of property.	✓		

Wind-load Engineering Summary, calculations and any details required

GENERAL REQUIREMENTS: APPLICANT – PLEASE CHECK ALL APPLICABLE BOXES BEFORE SUBMITTAL		Items to Include- Each Box shall be Circled as Applicable		
8	Plans or specifications must show compliance with FBCR Chapter 3	IIIIII	IIIII	IIIIII
		YES	NO	N/A
9	Basic wind speed (3-second gust), miles per hour	✓✓		
10	(Wind exposure – if more than one wind exposure is used, the wind exposure and applicable wind direction shall be indicated)	✓✓		
11	Wind importance factor and nature of occupancy	✓✓		
12	The applicable internal pressure coefficient, Components and Cladding	✓✓		
13	The design wind pressure in terms of psf (kN/m²), to be used for the design of exterior component, cladding materials not specifally designed by the registered design professional.	✓✓		

Elevations Drawing including:

14	All side views of the structure	✓✓		
15	Roof pitch	✓✓		
16	Overhang dimensions and detail with attic ventilation	✓✓		
17	Location, size and height above roof of chimneys	✓✓		
18	Location and size of skylights with Florida Product Approval	✓✓		
18	Number of stories	✓✓		
20A	Building height from the established grade to the roofs highest peak	✓✓		

Floor Plan including:

20	Dimensioned area plan showing rooms, attached garage, breeze ways, covered porches, deck, balconies	✓✓		
21	Raised floor surfaces located more than 30 inches above the floor or grade	✓✓		
22	All exterior and interior shear walls indicated	✓✓		
23	Shear wall opening shown (Windows, Doors and Garage doors)	✓✓		
24	Emergency escape and rescue opening shown in each bedroom (net clear opening shown)	✓✓		
25	Safety glazing of glass where needed	✓✓		
26	Fireplaces types (gas appliance) (vented or non-vented) or wood burning with Hearth (see chapter 10 of FBCR)	✓✓		X
27	Stairs with dimensions (width, tread and riser and total run) details of guardrails, Handrails (see FBCR SECTION 311)	✓✓		X
28	Identify accessibility of bathroom (see FBCR SECTION 322)	✓✓		

All materials placed within opening or onto/into exterior walls, soffits or roofs shall have Florida product approval number and mfg. installation information submitted with the plan (see Florida product approval form)

GENERAL REQUIREMENTS: APPLICANT – PLEASE CHECK ALL APPLICABLE BOXES BEFORE SUBMITTAL	Items to Include- Each Box shall be Circled as Applicable

FBCR 403: Foundation Plans

		YES	NO	N/A
29	Location of all load-bearing walls footings indicated as standard, monolithic, dimensions, size and type of reinforcing.	✓✓		
30	All posts and/or column footing including size and reinforcing	✓✓		
31	Any special support required by soil analysis such as piling.	✓✓		
32	Assumed load-bearing valve of soil 95% Pound Per Square Foot	✓✓		
33	Location of horizontal and vertical steel, for foundation or walls (include # size and type)	✓✓		

FBCR 506: CONCRETE SLAB ON GRADE

34	Show Vapor retarder (6mil. Polyethylene with joints lapped 6 inches and sealed)	✓✓		
35	Show control joints, synthetic fiber reinforcement or welded fire fabric reinforcement and Supports	✓✓		

FBCR 320: PROTECTION AGAINST TERMITES

36	Indicate on the foundation plan if soil treatment is used for subterranean termite prevention or submit other approved termite protection methods. **Protection shall be provided by registered termiticides**	✓✓		

FBCR 606: Masonry Walls and Stem walls (load bearing & shear Walls)

37	Show all materials making up walls, wall height, and Block size, mortar type	✓✓		
38	Show all Lintel sizes, type, spans and tie-beam sizes and spacing of reinforcement	✓✓		

Metal frame shear wall and roof systems shall be designed, signed and sealed by Florida Prof. Engineer or Architect

Floor Framing System: First and/or second story

39	Floor truss package shall including layout and details, signed and sealed by Florida Registered Professional Engineer	✓		
40	Show conventional floor joist type, size, span, spacing and attachment to load bearing walls, stem walls and/or priers	✓		
41	Girder type, size and spacing to load bearing walls, stem wall and/or priers	✓		
42	Attachment of joist to girder	✓		
43	Wind load requirements where applicable	✓		
44	Show required under-floor crawl space	✓		
45	Show required amount of ventilation opening for under-floor spaces	✓		
46	Show required covering of ventilation opening	✓		
47	Show the required access opening to access to under-floor spaces	✓		
	Show the sub-floor structural panel sheathing type, thickness and fastener schedule on the edges &	✓		

48	intermediate of the areas structural panel sheathing	✓		
49	Show Draftstopping, Fire caulking and Fire blocking	✓		
50	Show fireproofing requirements for garages attached to living spaces, per FBCR section 309	✓		
51	Provide live and dead load rating of floor framing systems (psf).	✓		

FBCR CHAPTER 6 WOOD WALL FRAMING CONSTRUCTION

	GENERAL REQUIREMENTS: APPLICANT – PLEASE CHECK ALL APPLICABLE BOXES BEFORE SUBMITTAL	Items to Include- Each Box shall be Circled as Applicable		
		YES	NO	N/A
52	Stud type, grade, size, wall height and oc spacing for all load bearing or shear walls	✓		
53	Fastener schedule for structural members per table FBCR 602.3 are to be shown	✓		
54	Show Wood structural panel's sheathing attachment to studs, joist, trusses, rafters and structural members, showing fastener schedule attachment on the edges & intermediate of the areas structural panel sheathing	✓		
55	Show all required connectors with a max uplift rating and required number of connectors and oc spacing for continuous connection of structural walls to foundation and roof trusses or rafter systems	✓		
56	Show sizes, type, span lengths and required number of support jack studs, king studs for shear wall opening and girder or header per FBCR Table 502.5 (1)	✓		
57	Indicate where pressure treated wood will be placed	✓		
58	Show all wall structural panel sheathing, grade, thickness and show fastener schedule for structural panel sheathing edges & intermediate areas	✓		
59	A detail showing gable truss bracing, wall balloon framing details or/ and wall hinge bracing detail	✓		

FBCR :ROOF SYSTEMS:

60	Truss design drawing shall meet section FBCR 802.10 Wood trusses	✓		
61	Include a layout and truss details, signed and sealed by Florida Professional Engineer	✓		
62	Show types of connector's assemblies' and resistance uplift rating for all trusses and rafters	✓		
63	Show gable ends with rake beams showing reinforcement or gable truss and wall bracing details	✓		
64	Provide dead load rating of trusses	✓		

FBCR 802:Conventional Roof Framing Layout

65	Rafter and ridge beams sizes, span, species and spacing			N/A
66	Connectors to wall assemblies' include assemblies' resistance to uplift rating			N/A
67	Valley framing and support details			N/A
68	Provide dead load rating of rafter system			N/A

FBCR Table 602,3(2) & FBCR 803 ROOF SHEATHING

69	Include all materials which will make up the roof decking, identification of structural panel sheathing, grade, thickness	✓		
70	Show fastener Size and schedule for structural panel sheathing on the edges & intermediate areas	✓		

FBCR ROOF ASSEMBLIES FRC Chapter 9

71	Include all materials which will make up the roof assembles covering	✓✓		
72	Submit Florida Product Approval numbers for each component of the roof assembles covering	✓✓		

FBCR Chapter 11 Energy Efficiency Code for residential building

Residential construction shall comply with this code by using the following compliance methods in the FBCR chapter11 Residential buildings compliance methods. *Two of the required forms are to be submitted, showing dimensions condition area equal to the total condition living space area*

GENERAL REQUIREMENTS: APPLICANT – PLEASE CHECK ALL APPLICABLE BOXES BEFORE SUBMITTAL		Items to Include- Each Box shall be Circled as Applicable		
		YES	NO	N/A
73	Show the insulation R value for the following areas of the structure	✓		
74	Attic space	✓		
75	Exterior wall cavity			n/a
76	Crawl space			n/a

HVAC information

77	Submit two copies of a Manual J sizing equipment or equivalent computation study	✓✓		
78	Exhaust fans locations in bathrooms	✓✓		
79	Show clothes dryer route and total run of exhaust duct	✓		

Plumbing Fixture layout shown

80	All fixtures waste water lines shall be shown on the foundation plan	✓		
81	Show the location of water heater	✓		

Private Potable Water

82	Pump motor horse power	✓		
83	Reservoir pressure tank gallon capacity			✓
84	Rating of cycle stop valve if used			✓

Electrical layout shown including

85	Switches, outlets/receptacles, lighting and all required GFCI outlets identified	✓		
86	Ceiling fans	✓		
87	Smoke detectors & Carbon dioxide detectors	✓		
88	Service panel, sub-panel, location(s) and total ampere ratings	✓		
89	On the electrical plans identify the electrical service overcurrent protection device for the main electrical service. This device shall be installed on the exterior of structures to serve as a disconnecting means for the utility company electrical service. Conductors used from the exterior disconnecting means to a panel or sub panel shall have four-wire conductors, of which one conductor shall be used as an equipment ground. Indicate if the utility company service entrance cable will be of the overhead or underground type.	✓		

90	Appliances and HVAC equipment and disconnects	✓		
91	Arc Fault Circuits (AFCI) in bedrooms	✓		

Disclosure Statement for Owner Builders *If you as the applicant will be acting as an owner/builder under section 489.103(7) of the Florida Statutes, submit the required owner builder disclosure statement form.*

Notice Of Commencement

A notice of commencement form **recorded** in the Columbia County Clerk Office is required to be filed with the building department Before Any Inspections can be preformed.

GENERAL REQUIREMENTS: APPLICANT – PLEASE CHECK ALL APPLICABLE BOXES BEFORE SUBMITTAL	Items to Include- Each Box shall be Circled as Applicable

THE FOLLOWING ITEMS MUST BE SUBMITTED WITH BUILDING PLANS

		YES	NO	N/A
92	**Building Permit Application** A current Building Permit Application form is to be completed and submitted for all residential projects	✓		
93	**Parcel Number** The parcel number (Tax ID number) from the Property Appraiser (386) 758-1084 is required. A copy of property deed is also requested	✓		
94	**Environmental Health Permit or Sewer Tap Approval** A copy of a approved Columbia County Environmental Health (386) 758-1058			
95	**City of Lake City** A permit showing an approved waste water sewer tap			X
96	**Toilet facilities shall be provided for all construction sites**			
97	**Town of Fort White** (386) 497-2321 If the parcel in the application for building permit is within the Corporate city limits of Fort White an approval land use development letter issued by the Town of Fort is required to be submitted with the application for a building permit.			X
98	**Flood Information:** All projects within the Floodway of the Suwannee or Santa Fe Rivers shall require permitting through the Suwannee River Water Management District, before submitting a application to this office. Any project located within a flood zone where the base flood elevation (100 year flood) has been established shall meet the requirements of Section 8.5.2 of the Columbia County Land Development Regulations. Any project located within a flood zone where the base flood elevation has not been established (Zone A) shall meet the requirements of Section 8.5.3 of the Columbia County Land Development Regulations			X
99	CERTIFIED FINISHED FLOOR ELEVATIONS will be required on any project where the base flood elevation (100 year flood) has been established			X
100	A development permit will also be required. Development permit cost is **$50.00**			X
101	**Driveway Connection:** If the property does not have an existing access to a public road, then an application for a culvert permit (**$25.00**) must be made. If the applicant feels that a culvert is not needed, they may apply for a culvert waiver (**$50.00**). All culvert waivers are sent to the Columbia County Public Works Department for approval or denial.			X
102	**911 Address:** If the project is located in an area where a 911 address has not been issued, then application for a 911address must be applied for and **received** through the Columbia County Emergency Management Office of 911 Addressing Department (386) 758-1125			

Section R101.2.1 of the Florida Building Code Residential:

The provisions of Chapter 1, Florida Building Code, Building shall govern the administration and enforcement of the Florida Building Code, Residential.

Section 105 of the Florida Building Code defines the:

Time limitation of application.

An application for a permit for any proposed work shall be deemed to have been abandoned 180 days after the date of filing, unless such application has been pursued in good faith or a permit has been issued; except that the building official is authorized to grant one or more extensions of time for additional periods not exceeding 90 days each. The extension shall be requested in writing and justifiable cause demonstrated.

Single-family residential dwelling.

Section 105.3.4 A building permit for a single-family residential dwelling must be issued within 30 working days of application therefor unless unusual circumstances require a longer time for processing the applicati or unless the permit application fails to satisfy the Florida Building Code or the enforcing agency's laws or ordinances.

Permit intent.

Section 105.4.1: A permit issued shall be constructed to be a license to proceed with the work and not as authority to violate, cancel, alter or set aside any of the provisions of the technical codes, nor shall issuance a permit prevent the building official from thereafter requiring a correction of errors in plans, construction or violations of this code. Every permit issued shall become invalid unless the work authorized by such permit is commenced within six months after its issuance, or if the work authorized by such permit is suspended or abandoned for a period of six months after the time the work is commenced.

If work has commenced.

Section 105.4.1.1: If work has commenced and the permit is revoked, becomes null and void, or expires because of lack of progress or abandonment, a new permit covering the proposed construction shall be obtained before proceeding with the work.

New Permit.

Section 105.4.1.2: If a new permit is not obtained within 180 days from the date the initial permit became nu and void, the building official is authorized to require that any work which has been commenced or completed be removed from the building site. Alternately, a new permit may be issued on application, providing the work in place and required to complete the structure meets all applicable regulations in effect at the time the initial permit became null and void and any regulations which may have become effective between the date of expiration and the date if issuance of the new permit.

Work Shall Be:

Section 105.4.1.3: Work shall be considered to be in active progress when the permit has received an approved inspection within 180 days. This provision shall not be applicable in case of civil commotion or strike or when the building work is halted due directly to judicial injunction, order or similar process.

The Fee:

Section 105.4.1.4: The fee for renewal reissuance and extension of a permit shall be set forth by the administrative authority.

When the submitted application is approved for permitting the applican will be notified by phone as to the date and time a building permit will b prepared and issued by the Columbia County Building & Zoning Department

PRODUCT APPROVAL SPECIFICATION SHEET

Location: Ft. White **Project Name:** Fazzino, Daniela

As required by Florida Statute 553.842 and Florida Administrative Code 9B-72, please provide the information and the product approval number(s) on the building components listed below if they will be utilized on the construction project for which you are **applying for a building permit on or after April 1, 2004**. We recommend you contact your local product supplier should you not know the product approval number for any of the applicable listed products. More information about statewide product approval can be obtained at www.floridabuilding.org

Category/Subcategory	Manufacturer	Product Description	Approval Number(s)
A. EXTERIOR DOORS	Plas Pro	Fiberglass doors	FL3030-R3
1. Swinging			
2. Sliding			
3. Sectional			
4. Roll up			
5. Automatic			
6. Other			
B. WINDOWS	YKK	Vinyl Single Hung Low-E	FL8114-R1
1. Single hung			
2. Horizontal Slider			
3. Casement			
4. Double Hung			
5. Fixed			
6. Awning			
7. Pass -through			
8. Projected			
9. Mullion			
10. Wind Breaker			
11 Dual Action			
12. Other			
C. PANEL WALL	n/A		
1. Siding			
2. Soffits			
3. EIFS			
4. Storefronts			
5. Curtain walls			
6. Wall louver			
7. Glass block			
8. Membrane			
9. Greenhouse			
10. Other			
D. ROOFING PRODUCTS	Owens Corning	30 yr Arch.	FL10674-R1
1. Asphalt Shingles			
2. Underlayments			
3. Roofing Fasteners			
4. Non-structural Metal Rf			
5. Built-Up Roofing			
6. Modified Bitumen			
7. Single Ply Roofing Sys			
8. Roofing Tiles			
9. Roofing Insulation			
10. Waterproofing			
11. Wood shingles /shakes			
12. Roofing Slate			

Category/Subcategory (cont.)	Manufacturer	Product Description	Approval Number(s)
13. Liquid Applied Roof Sys			
14. Cements-Adhesives – Coatings			
15. Roof Tile Adhesive			
16. Spray Applied Polyurethane Roof			
17. Other			
E. SHUTTERS	n/a		
1. Accordion			
2. Bahama			
3. Storm Panels			
4. Colonial			
5. Roll-up			
6. Equipment			
7. Others			
F. SKYLIGHTS	n/a		
1. Skylight			
2. Other			
G. STRUCTURAL COMPONENTS	Simpson	All structural straps	FL 10441-10447
1. Wood connector/anchor			
2. Truss plates			
3. Engineered lumber			
4. Railing			
5. Coolers-freezers			
6. Concrete Admixtures			
7. Material			
8. Insulation Forms			
9. Plastics			
10. Deck-Roof			
11. Wall			
12. Sheds			
13. Other			
H. NEW EXTERIOR ENVELOPE PRODUCTS	n/a		
1.			
2.			

The products listed below did not demonstrate product approval at plan review. I understand that at the time of inspection of these products, the following information must be available to the inspector on the jobsite; 1) copy of the product approval, 2) the performance characteristics which the product was tested and certified to comply with, 3) copy of the applicable manufacturers installation requirements.

I understand these products may have to be removed if approval cannot be demonstrated during inspectio

Contractor or Contractor's Authorized Agent Signature

Travis Williams
Print Name

3/18/09
Date

Residential System Sizing Calculation

Summary

Fazzino
913 SW Coles Court
Ft. White, FL

Project Title:
902052InnovativeHomeBuildersFazzinoRes.

Class 3 Rating
Registration No. 0
Climate: North

2/10/2009

Location for weather data: Gainesville - Defaults: Latitude(29) Altitude(152 ft.) Temp Range(M)
Humidity data: Interior RH (50%) Outdoor wet bulb (77F) Humidity difference(54gr.)

Winter design temperature	33	F	Summer design temperature	92	F
Winter setpoint	70	F	Summer setpoint	75	F
Winter temperature difference	37	F	Summer temperature difference	17	F
Total heating load calculation	**31120**	**Btuh**	**Total cooling load calculation**	**25083**	**Btuh**
Submitted heating capacity	% of calc	Btuh	Submitted cooling capacity	% of calc	Btuh
Total (Electric Heat Pump)	118.9	37000	Sensible (SHR = 0.75)	137.5	27750
Heat Pump + Auxiliary(0.0kW)	118.9	37000	Latent	188.8	9250
			Total (Electric Heat Pump)	147.5	37000

WINTER CALCULATIONS

Winter Heating Load (for 1607 sqft)

Load component			Load	
Window total	165	sqft	5295	Btuh
Wall total	1438	sqft	7387	Btuh
Door total	54	sqft	699	Btuh
Ceiling total	1607	sqft	1894	Btuh
Floor total	184	sqft	8033	Btuh
Infiltration	193	cfm	7811	Btuh
Duct loss			0	Btuh
Subtotal			**31120**	**Btuh**
Ventilation	0	cfm	0	Btuh
TOTAL HEAT LOSS			**31120**	**Btuh**

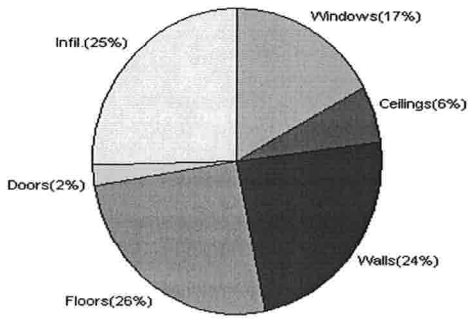

SUMMER CALCULATIONS

Summer Cooling Load (for 1607 sqft)

Load component			Load	
Window total	165	sqft	7882	Btuh
Wall total	1438	sqft	3447	Btuh
Door total	54	sqft	529	Btuh
Ceiling total	1607	sqft	2661	Btuh
Floor total			0	Btuh
Infiltration	101	cfm	1884	Btuh
Internal gain			3780	Btuh
Duct gain			0	Btuh
Sens. Ventilation	0	cfm	0	Btuh
Total sensible gain			**20184**	**Btuh**
Latent gain(ducts)			0	Btuh
Latent gain(infiltration)			3700	Btuh
Latent gain(ventilation)			0	Btuh
Latent gain(internal/occupants/other)			1200	Btuh
Total latent gain			**4900**	**Btuh**
TOTAL HEAT GAIN			**25083**	**Btuh**

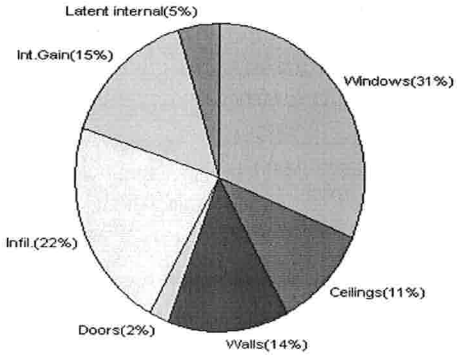

For Florida residences only

EnergyGauge® System Sizing
PREPARED BY:
DATE: 2/10/09

System Sizing Calculations - Winter

Residential Load - Whole House Component Details

Fazzino
913 SW Coles Court
Ft. White, FL

Project Title:
902052InnovativeHomeBuildersFazzinoRes.

Class 3 Rating
Registration No. 0
Climate: North

Reference City: Gainesville (Defaults) Winter Temperature Difference: 37.0 F

2/10/2009

This calculation is for Worst Case. The house has been rotated 315 degrees.

Component Loads for Whole House

Window	Panes/SHGC/Frame/U	Orientation	Area(sqft) X	HTM=	Load
1	2, Clear, Metal, 0.87	NW	16.0	32.2	515 Btuh
2	2, Clear, Metal, 0.87	NW	20.0	32.2	644 Btuh
3	2, Clear, Metal, 0.87	NW	15.0	32.2	483 Btuh
4	2, Clear, Metal, 0.87	SE	60.0	32.2	1931 Btuh
5	2, Clear, Metal, 0.87	SW	30.0	32.2	966 Btuh
6	2, Clear, Metal, 0.87	SW	7.5	32.2	241 Btuh
7	2, Clear, Metal, 0.87	SW	16.0	32.2	515 Btuh
	Window Total		165(sqft)		5295 Btuh
Walls	Type	R-Value	Area X	HTM=	Load
1	Concrete Blk,Hollow - Ext(0.15)	4.0	1179	5.5	6537 Btuh
2	Frame - Wood - Adj(0.09)	13.0	259	3.3	851 Btuh
	Wall Total		1438		7387 Btuh
Doors	Type		Area X	HTM=	Load
1	Insulated - Adjacent		20	12.9	259 Btuh
2	Insulated - Exterior		20	12.9	259 Btuh
3	Insulated - Exterior		14	12.9	181 Btuh
	Door Total		54		699Btuh
Ceilings	Type/Color/Surface	R-Value	Area X	HTM=	Load
1	Vented Attic/D/Shin)	30.0	1607	1.2	1894 Btuh
	Ceiling Total		1607		1894Btuh
Floors	Type	R-Value	Size X	HTM=	Load
1	Slab On Grade	0	184.0 ft(p)	43.7	8033 Btuh
	Floor Total		184		8033 Btuh
			Zone Envelope Subtotal:		23309 Btuh
Infiltration	Type	ACH X	Zone Volume	CFM=	
	Natural	0.80	14463	192.8	7811 Btuh
Ductload	Partially sealed, R6.0, Supply(Attic), Return(Attic)			(DLM of 0.00)	0 Btuh
Zone #1			**Sensible Zone Subtotal**		**31120 Btuh**

Manual J Winter Calculations

Residential Load - Component Details (continued)

Fazzino
913 SW Coles Court
Ft. White, FL

Project Title:
902052InnovativeHomeBuildersFazzinoRes.

Class 3 Rating
Registration No. 0
Climate: North

2/10/2009

WHOLE HOUSE TOTALS

	Subtotal Sensible	31120 Btuh
	Ventilation Sensible	0 Btuh
	Total Btuh Loss	31120 Btuh

Key: Window types (SHGC - Shading coefficient of glass as SHGC numerical value or as clear or tint)
(Frame types - metal, wood or insulated metal)
(U - Window U-Factor or 'DEF' for default)
(HTM - ManualJ Heat Transfer Multiplier)
Key: Floor size (perimeter(p) for slab-on-grade or area for all other floor types)

For Florida residences only

System Sizing Calculations - Winter

Residential Load - Room by Room Component Details

Fazzino
913 SW Coles Court
Ft. White, FL

Project Title:
902052InnovativeHomeBuildersFazzinoRes.

Class 3 Rating
Registration No. 0
Climate: North

Reference City: Gainesville (Defaults) Winter Temperature Difference: 37.0 F

2/10/2009

This calculation is for Worst Case. The house has been rotated 315 degrees.

Component Loads for Zone #1: Main

Window	Panes/SHGC/Frame/U	Orientation	Area(sqft) X	HTM=	Load
1	2, Clear, Metal, 0.87	NW	16.0	32.2	515 Btuh
2	2, Clear, Metal, 0.87	NW	20.0	32.2	644 Btuh
3	2, Clear, Metal, 0.87	NW	15.0	32.2	483 Btuh
4	2, Clear, Metal, 0.87	SE	60.0	32.2	1931 Btuh
5	2, Clear, Metal, 0.87	SW	30.0	32.2	966 Btuh
6	2, Clear, Metal, 0.87	SW	7.5	32.2	241 Btuh
7	2, Clear, Metal, 0.87	SW	16.0	32.2	515 Btuh
	Window Total		165(sqft)		5295 Btuh
Walls	Type	R-Value	Area X	HTM=	Load
1	Concrete Blk,Hollow - Ext(0.15)	4.0	1179	5.5	6537 Btuh
2	Frame - Wood - Adj(0.09)	13.0	259	3.3	851 Btuh
	Wall Total		1438		7387 Btuh
Doors	Type		Area X	HTM=	Load
1	Insulated - Adjacent		20	12.9	259 Btuh
2	Insulated - Exterior		20	12.9	259 Btuh
3	Insulated - Exterior		14	12.9	181 Btuh
	Door Total		54		699Btuh
Ceilings	Type/Color/Surface	R-Value	Area X	HTM=	Load
1	Vented Attic/D/Shin)	30.0	1607	1.2	1894 Btuh
	Ceiling Total		1607		1894Btuh
Floors	Type	R-Value	Size X	HTM=	Load
1	Slab On Grade	0	184.0 ft(p)	43.7	8033 Btuh
	Floor Total		184		8033 Btuh
			Zone Envelope Subtotal:		23309 Btuh
Infiltration	Type	ACH X	Zone Volume	CFM=	
	Natural	0.80	14463	192.8	7811 Btuh
Ductload	Partially sealed, R6.0, Supply(Attic), Return(Attic)			(DLM of 0.00)	0 Btuh
Zone #1			**Sensible Zone Subtotal**		**31120 Btuh**

Manual J Winter Calculations

Residential Load - Component Details (continued)

Fazzino
913 SW Coles Court
Ft. White, FL

Project Title:
902052InnovativeHomeBuildersFazzinoRes.

Class 3 Rating
Registration No. 0
Climate: North

2/10/2009

WHOLE HOUSE TOTALS

	Subtotal Sensible	31120 Btuh
	Ventilation Sensible	0 Btuh
	Total Btuh Loss	31120 Btuh

Key: Window types (SHGC - Shading coefficient of glass as SHGC numerical value or as clear or tint)
(Frame types - metal, wood or insulated metal)
(U - Window U-Factor or 'DEF' for default)
(HTM - ManualJ Heat Transfer Multiplier)
Key: Floor size (perimeter(p) for slab-on-grade or area for all other floor types)

For Florida residences only

System Sizing Calculations - Summer

Residential Load - Whole House Component Details

Fazzino
913 SW Coles Court
Ft. White, FL

Project Title:
902052InnovativeHomeBuildersFazzinoRes.

Class 3 Rating
Registration No. 0
Climate: North

Reference City: Gainesville (Defaults) Summer Temperature Difference: 17.0 F 2/10/2009

This calculation is for Worst Case. The house has been rotated 315 degrees.

Component Loads for Whole House

Window	Type* Pn/SHGC/U/InSh/ExSh/IS	Ornt	Overhang Len	Overhang Hgt	Window Area(sqft) Gross	Shaded	Unshaded	HTM Shaded	HTM Unshaded	Load
1	2, Clear, 0.87, None,N,N	NW	1.5ft	6ft.	16.0	0.0	16.0	29	60	961 Btuh
2	2, Clear, 0.87, None,N,N	NW	7.5ft	8ft.	20.0	0.0	20.0	29	60	1201 Btuh
3	2, Clear, 0.87, None,N,N	NW	7.5ft	7ft.	15.0	0.0	15.0	29	60	901 Btuh
4	2, Clear, 0.87, None,N,N	SE	9ft.	7ft.	60.0	60.0	0.0	29	63	1738 Btuh
5	2, Clear, 0.87, None,N,N	SW	1.5ft	7ft.	30.0	3.1	26.9	29	63	1771 Btuh
6	2, Clear, 0.87, None,N,N	SW	1.5ft	3.5ft	7.5	2.6	4.9	29	63	381 Btuh
7	2, Clear, 0.87, None,N,N	SW	1.5ft	6ft.	16.0	2.1	13.9	29	63	930 Btuh
	Window Total				165 (sqft)					7882 Btuh

Walls	Type	R-Value/U-Value	Area(sqft)	HTM	Load
1	Concrete Blk,Hollow - Ext	4.0/0.15	1178.5	2.6	3056 Btuh
2	Frame - Wood - Adj	13.0/0.09	259.0	1.5	391 Btuh
	Wall Total		1438 (sqft)		3447 Btuh

Doors	Type	Area (sqft)	HTM	Load
1	Insulated - Adjacent	20.0	9.8	196 Btuh
2	Insulated - Exterior	20.0	9.8	196 Btuh
3	Insulated - Exterior	14.0	9.8	137 Btuh
	Door Total	54 (sqft)		529 Btuh

Ceilings	Type/Color/Surface	R-Value	Area(sqft)	HTM	Load
1	Vented Attic/DarkShingle	30.0	1607.0	1.7	2661 Btuh
	Ceiling Total		1607 (sqft)		2661 Btuh

Floors	Type	R-Value	Size	HTM	Load
1	Slab On Grade	0.0	184 (ft(p))	0.0	0 Btuh
	Floor Total		184.0 (sqft)		0 Btuh

	Zone Envelope Subtotal:	14519 Btuh

Infiltration	Type	ACH	Volume(cuft)	CFM=	Load
	SensibleNatural	0.42	14463	101.2	1884 Btuh

Internal gain	Occupants	Btuh/occupant	Appliance	Load
	6	X 230 +	2400	3780 Btuh

Duct load	Partially sealed, R6.0, Supply(Attic), Return(Attic) DGM = 0.00	0.0 Btuh
	Sensible Zone Load	**20184 Btuh**

Manual J Summer Calculations

Residential Load - Component Details (continued)

Fazzino
913 SW Coles Court
Ft. White, FL

Project Title:
902052InnovativeHomeBuildersFazzinoRes.

Class 3 Rating
Registration No. 0
Climate: North

2/10/2009

WHOLE HOUSE TOTALS

	Sensible Envelope Load All Zones	**20184**	**Btuh**
	Sensible Duct Load	0	Btuh
	Total Sensible Zone Loads	**20184**	**Btuh**
	Sensible ventilation	0	Btuh
	Blower	0	Btuh
Whole House	**Total sensible gain**	**20184**	**Btuh**
Totals for Cooling	Latent infiltration gain (for 54 gr. humidity difference)	3700	Btuh
	Latent ventilation gain	0	Btuh
	Latent duct gain	0	Btuh
	Latent occupant gain (6 people @ 200 Btuh per person)	1200	Btuh
	Latent other gain	0	Btuh
	Latent total gain	**4900**	**Btuh**
	TOTAL GAIN	**25083**	**Btuh**

*Key: Window types (Pn - Number of panes of glass)
(SHGC - Shading coefficient of glass as SHGC numerical value or as clear or tint)
(U - Window U-Factor or 'DEF' for default)
(InSh - Interior shading device: none(N), Blinds(B), Draperies(D) or Roller Shades(R))
(ExSh - Exterior shading device: none(N) or numerical value)
(BS - Insect screen: none(N), Full(F) or Half(H))
(Ornt - compass orientation)

For Florida residences only

System Sizing Calculations - Summer

Residential Load - Room by Room Component Details

Fazzino
913 SW Coles Court
Ft. White, FL

Project Title:
902052InnovativeHomeBuildersFazzinoRes.

Class 3 Rating
Registration No. 0
Climate: North

Reference City: Gainesville (Defaults) Summer Temperature Difference: 17.0 F 2/10/2009

This calculation is for Worst Case. The house has been rotated 315 degrees.

Component Loads for Zone #1: Main

Window	Type* Pn/SHGC/U/InSh/ExSh/IS	Ornt	Overhang Len	Overhang Hgt	Window Area(sqft) Gross	Shaded	Unshaded	HTM Shaded	HTM Unshaded	Load
1	2, Clear, 0.87, None,N,N	NW	1.5ft	6ft.	16.0	0.0	16.0	29	60	961 Btuh
2	2, Clear, 0.87, None,N,N	NW	7.5ft	8ft.	20.0	0.0	20.0	29	60	1201 Btuh
3	2, Clear, 0.87, None,N,N	NW	7.5ft	7ft.	15.0	0.0	15.0	29	60	901 Btuh
4	2, Clear, 0.87, None,N,N	SE	9ft.	7ft.	60.0	60.0	0.0	29	63	1738 Btuh
5	2, Clear, 0.87, None,N,N	SW	1.5ft	7ft.	30.0	3.1	26.9	29	63	1771 Btuh
6	2, Clear, 0.87, None,N,N	SW	1.5ft	3.5ft	7.5	2.6	4.9	29	63	381 Btuh
7	2, Clear, 0.87, None,N,N	SW	1.5ft	6ft.	16.0	2.1	13.9	29	63	930 Btuh
	Window Total				165 (sqft)					7882 Btuh

Walls	Type	R-Value/U-Value	Area(sqft)	HTM	Load
1	Concrete Blk,Hollow - Ext	4.0/0.15	1178.5	2.6	3056 Btuh
2	Frame - Wood - Adj	13.0/0.09	259.0	1.5	391 Btuh
	Wall Total		1438 (sqft)		3447 Btuh

Doors	Type	Area (sqft)	HTM	Load
1	Insulated - Adjacent	20.0	9.8	196 Btuh
2	Insulated - Exterior	20.0	9.8	196 Btuh
3	Insulated - Exterior	14.0	9.8	137 Btuh
	Door Total	54 (sqft)		529 Btuh

Ceilings	Type/Color/Surface	R-Value	Area(sqft)	HTM	Load
1	Vented Attic/DarkShingle	30.0	1607.0	1.7	2661 Btuh
	Ceiling Total		1607 (sqft)		2661 Btuh

Floors	Type	R-Value	Size	HTM	Load
1	Slab On Grade	0.0	184 (ft(p))	0.0	0 Btuh
	Floor Total		184.0 (sqft)		0 Btuh

	Zone Envelope Subtotal:	14519 Btuh

Infiltration	Type	ACH	Volume(cuft)	CFM=	Load
	SensibleNatural	0.42	14463	101.2	1884 Btuh

Internal gain	Occupants	Btuh/occupant		Appliance	Load
	6	X 230	+	2400	3780 Btuh

Duct load	Partially sealed, R6.0, Supply(Attic), Return(Attic) DGM = 0.00	0.0 Btuh
	Sensible Zone Load	**20184 Btuh**

Manual J Summer Calculations

Residential Load - Component Details (continued)

Fazzino
913 SW Coles Court
Ft. White, FL

Project Title:
902052InnovativeHomeBuildersFazzinoRes.

Class 3 Rating
Registration No. 0
Climate: North

2/10/2009

WHOLE HOUSE TOTALS

	Sensible Envelope Load All Zones	**20184**	**Btuh**
	Sensible Duct Load	0	Btuh
	Total Sensible Zone Loads	**20184**	**Btuh**
	Sensible ventilation	0	Btuh
	Blower	0	Btuh
Whole House	**Total sensible gain**	**20184**	**Btuh**
Totals for Cooling	Latent infiltration gain (for 54 gr. humidity difference)	3700	Btuh
	Latent ventilation gain	0	Btuh
	Latent duct gain	0	Btuh
	Latent occupant gain (6 people @ 200 Btuh per person)	1200	Btuh
	Latent other gain	0	Btuh
	Latent total gain	**4900**	**Btuh**
	TOTAL GAIN	**25083**	**Btuh**

*Key: Window types (Pn - Number of panes of glass)
(SHGC - Shading coefficient of glass as SHGC numerical value or as clear or tint)
(U - Window U-Factor or 'DEF' for default)
(InSh - Interior shading device: none(N), Blinds(B), Draperies(D) or Roller Shades(R))
(ExSh - Exterior shading device: none(N) or numerical value)
(BS - Insect screen: none(N), Full(F) or Half(H))
(Ornt - compass orientation)

For Florida residences only

Residential Window Diversity

MidSummer

Fazzino
913 SW Coles Court
Ft. White, FL

Project Title:
902052InnovativeHomeBuildersFazzinoRes.

Class 3 Rating
Registration No. 0
Climate: North

2/10/2009

Weather data for: Gainesville - Defaults

Summer design temperature	92 F	Average window load for July	7330 Btuh
Summer setpoint	75 F	Peak window load for July	11781 Btu
Summer temperature difference	17 F	Excusion limit(130% of Ave.)	9529 Btuh
Latitude	29 North	Window excursion (July)	2252 Btuh

WINDOW Average and Peak Loads

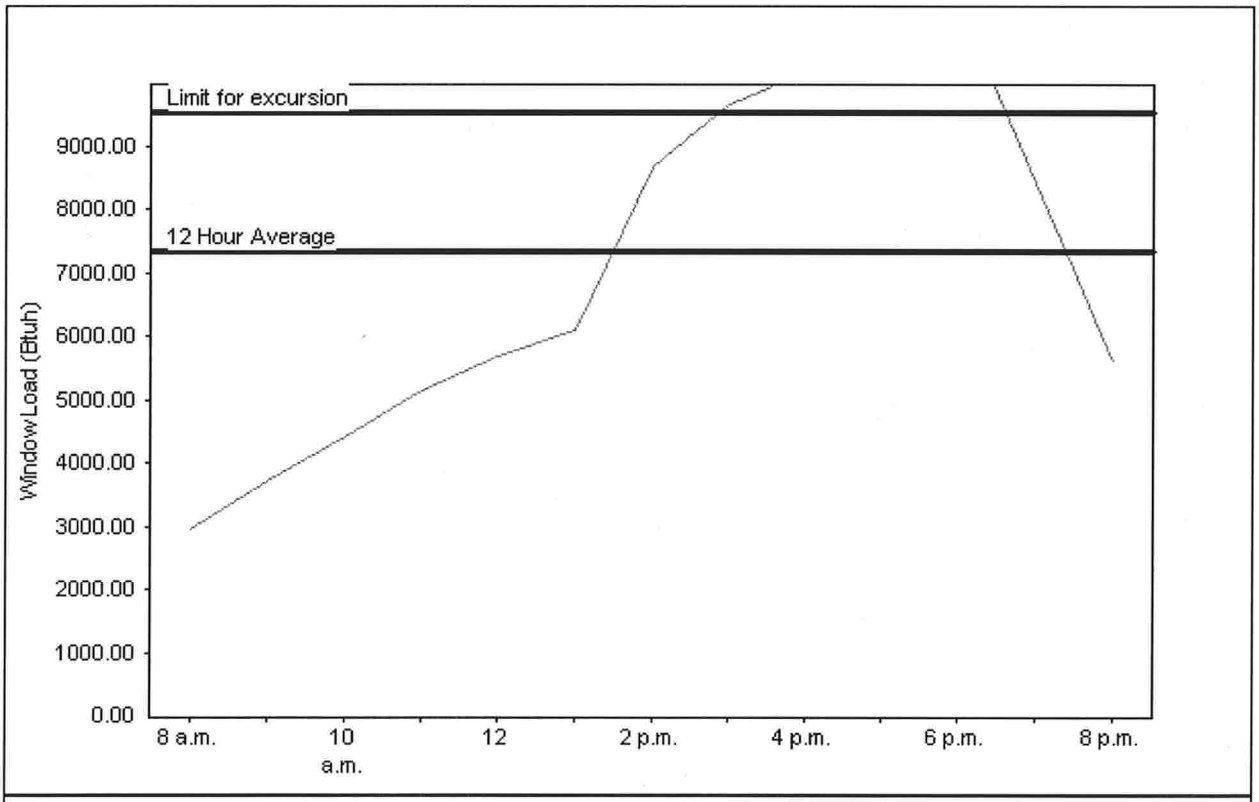

Total July Window Load(Radiation and conduction)

This application has glass areas that produce large heat gains for part of the day. Variable air volume devices are required to overcome spikes in solar gain for one or more rooms. Install a zoned system or provide zone control for problem rooms. Single speed equipment may not be suitable for the application.

EnergyGauge® System Sizing for Florida residences only
PREPARED BY: _____
DATE: 2/10/09

EnergyGauge® FLR2PB v4.1

ITW Building Components Group, Inc.

1950 Marley Drive Haines City, FL 33844
Florida Engineering Certificate of Authorization Number: 0 278
Florida Certificate of Product Approval # FL1999
 Document ID:1TPM8228Z0303144200

Truss Fabricator: Anderson Truss Company
Job Identification: 9-057--OWNER BUILDER Travis Williams-Fazzino -- , **
Truss Count: 31
Model Code: Florida Building Code
Truss Criteria: FBC2007Res/TPI-2002(STD)
Engineering Software: Alpine Software,Version 8.07.
Structural Engineer of Record: The identity of the structural EOR did not exist as of
Address: the seal date per section 61G15-31.003(5a) of the FAC
Minimum Design Loads: Roof - 40.0 PSF @ 1.25 Duration
Floor - N/A
Wind - 110 MPH ASCE 7-05 -Closed

Seal Date: 03/03/2009

-Truss Design Engineer-
Doug Fleming
Florida License Number: 66648
1950 Marley Drive
Haines City, FL 33844

Notes:

1. Determination as to the suitability of these truss components for the structure is the responsibility of the building designer/engineer of record, as defined in ANSI/TPI 1
2. The drawing date shown on this index sheet must match the date shown on the individual truss component drawing.
3. As shown on attached drawings; the drawing number is preceded by: HCUSR8228

Details: BRCLBSUB-VAL130-A1103005-GBLLETIN-A1101505-PB140-

#	Ref Description	Drawing#	Date
1	81774--H7A	09061011	03/02/09
2	81775--H9A	09061012	03/02/09
3	81776--H11A	09061013	03/02/09
4	81777--H13A	09061014	03/02/09
5	81778--H15A	09061015	03/02/09
6	81779--H17A	09061016	03/02/09
7	81780--H19A	09061017	03/02/09
8	81781--H21A	09061018	03/02/09
9	81782--V1	09061019	03/02/09
10	81783--V2	09061003	03/02/09
11	81784--V3	09061004	03/02/09
12	81785--V4	09061005	03/02/09
13	81786--V5	09061006	03/02/09
14	81787--H21B	09061020	03/02/09
15	81788--H19B	09061021	03/02/09
16	81789--H17B	09061022	03/02/09
17	81790--H15B	09061023	03/02/09
18	81791--H13B	09061024	03/02/09
19	81792--H11B	09061025	03/02/09
20	81793--H9B	09061026	03/02/09
21	81794--H7B	09061027	03/02/09
22	81795--C2	09061007	03/02/09
23	81796--C1	09061008	03/02/09
24	81797--C-GE	09061028	03/02/09
25	81798--C3-GDR	09061033	03/02/09
26	81799--EJ7	09061009	03/02/09
27	81800--J1	09061029	03/02/09
28	81801--J3	09061010	03/02/09
29	81802--J5	09061030	03/02/09
30	81803--HJ7	09061031	03/02/09
31	81804--PB1	09061032	03/02/09

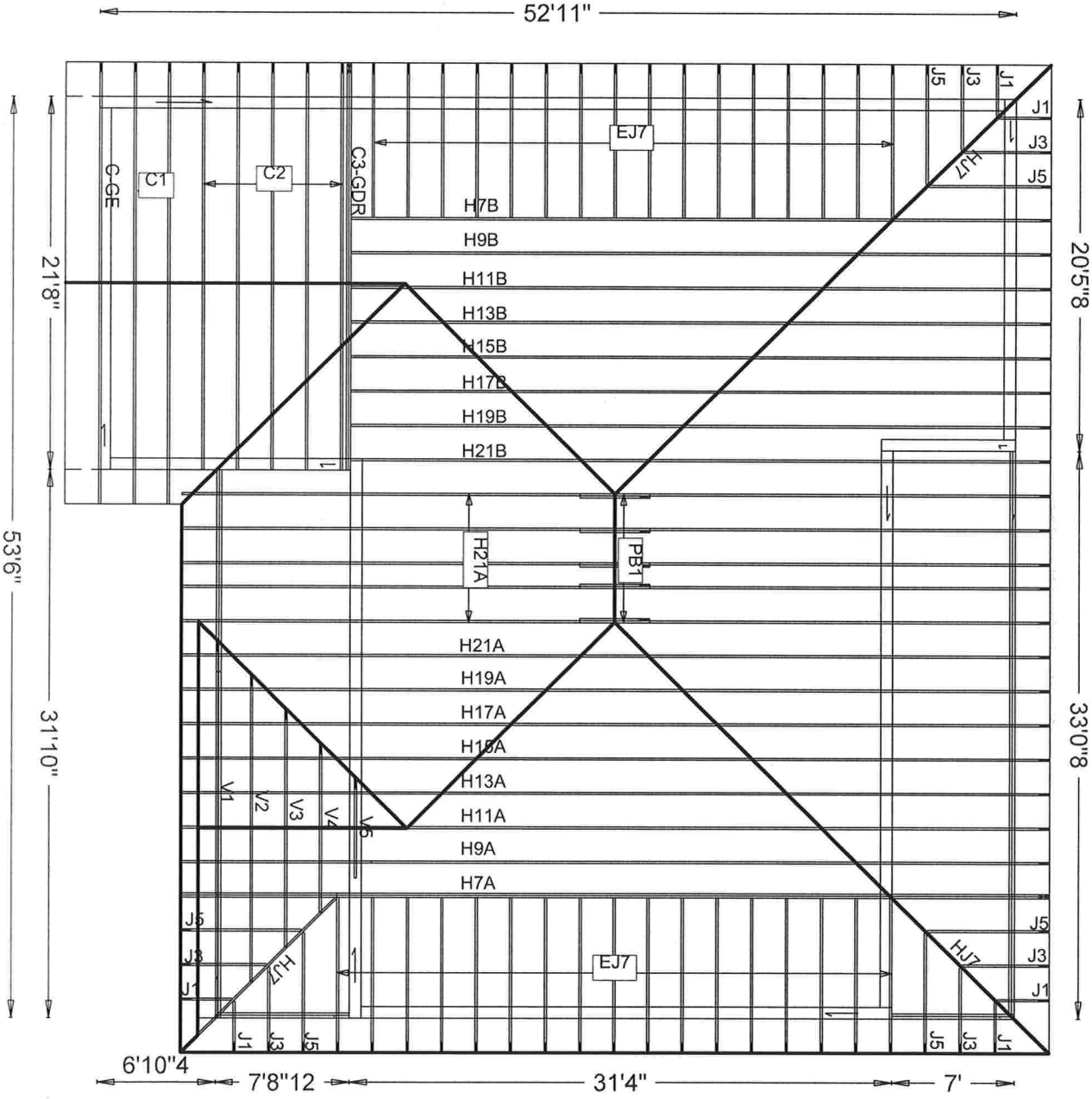

#9-057
TRAVIS WILLIAMS-
FAZZINO

JOB DESCRIPTION:: OWNER BUILDER
/: Travis Williams-Fazzino

JOB NO:
9-057

PAGE NO:
1 OF 1

(9-057--OWNER BUILDER Travis Williams-Fazzino -- , ** - H7A)

Top chord 2x6 SP #2 :T1, T5 2x4 SP #2 Dense:
Bot chord 2x6 SP #2
Webs 2x4 SP #3

Negative reaction(s) of -631# MAX. (See below) from a non-wind load case requires uplift connection. **

110 mph wind, 15.00 ft mean hgt, ASCE 7-05, PART._ENC. bldg, Located anywhere in roof, CAT II, EXP B, wind TC DL=5.0 psf, wind BC DL=5.0 psf. Iw=1.00 GCpi(+/-)=0.55

Roof overhang supports 2.00 psf soffit load.

#1 hip supports 7-0-0 jacks with no webs.

WARNING: Furnish a copy of this DWG to the installation contractor. Special care must be taken during handling, shipping and installation of trusses. See "WARNING" note below.

2 COMPLETE TRUSSES REQUIRED

Nailing Schedule: (12d_Common_(0.148"x3.25",_min.)_nails)
Top Chord: 1 Row @12.00" o.c.
Bot Chord: 1 Row @12.00" o.c.
Webs : 1 Row @ 4" o.c.
Use equal spacing between rows and stagger nails in each row to avoid splitting.

Wind reactions based on MWFRS pressures.

In lieu of structural panels use purlins to brace all flat TC @ 24" OC.

Deflection meets L/240 live and L/180 total load.

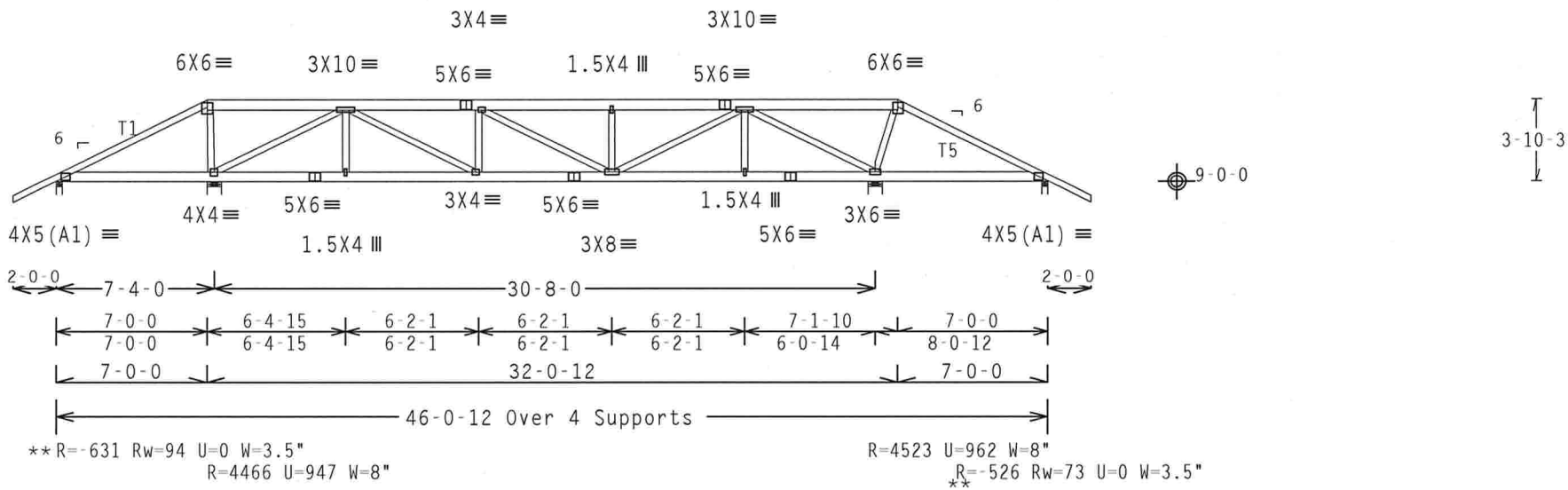

Design Crit: FBC2007Res/TPI-2002(STD)

PLT TYP. Wave | FT/RT=20%(0%)/0(0) | 8.07.00 | QTY:1 | FL/-/4/-/-/R/- | Scale =.125"/Ft.

ALPINE
ITW Building Components Group Inc.
Haines City, FL 33844
FL C[illegible]78

WARNING TRUSSES REQUIRE EXTREME CARE IN FABRICATION, HANDLING, SHIPPING, INSTALLING AND BRACING. REFER TO BCSI (BUILDING COMPONENT SAFETY INFORMATION), PUBLISHED BY TPI (TRUSS PLATE INSTITUTE, 218 NORTH LEE STREET, SUITE 312, ALEXANDRIA, VA, 22314) AND WTCA (WOOD TRUSS COUNCIL OF AMERICA, 6300 ENTERPRISE LANE, MADISON, WI 53719) FOR SAFETY PRACTICES PRIOR TO PERFORMING THESE FUNCTIONS. UNLESS OTHERWISE INDICATED TOP CHORD SHALL HAVE PROPERLY ATTACHED STRUCTURAL PANELS AND BOTTOM CHORD SHALL HAVE A PROPERLY ATTACHED RIGID CEILING.

IMPORTANTFURNISH A COPY OF THIS DESIGN TO THE INSTALLATION CONTRACTOR. ITW BCG, INC. SHALL NOT BE RESPONSIBLE FOR ANY DEVIATION FROM THIS DESIGN; ANY FAILURE TO BUILD THE TRUSS IN COMFORMANCE WITH TPI; OR FABRICATING, HANDLING, SHIPPING, INSTALLING & BRACING OF TRUSSES.
DESIGN CONFORMS WITH APPLICABLE PROVISIONS OF NDS (NATIONAL DESIGN SPEC. BY AF&PA) AND TPI. ITW BCG CONNECTOR PLATES ARE MADE OF 20/18/16GA (W.H/SS/K) ASTM A653 GRADE 40/60 (W, K/H,SS) GALV. STEEL. APPLY PLATES TO EACH FACE OF TRUSS AND, UNLESS OTHERWISE LOCATED ON THIS DESIGN, POSITION PER DRAWINGS 160A-Z. ANY INSPECTION OF PLATES FOLLOWED BY (1) SHALL BE PER ANNEX A3 OF TPI1-2002 SEC.3. A SEAL ON THIS DRAWING INDICATES ACCEPTANCE OF PROFESSIONAL ENGINEERING RESPONSIBILITY SOLELY FOR THE TRUSS COMPONENT DESIGN SHOWN. THE SUITABILITY AND USE OF THIS COMPONENT FOR ANY BUILDING IS THE RESPONSIBILITY OF THE BUILDING DESIGNER PER ANSI/TPI 1 SEC. 2.

DOUGLAS FLEMING LICENSE No. 66648 STATE OF FLORIDA PROFESSIONAL ENGINEER
03 '09

TC LL	20.0 PSF	REF	R8228- 81774
TC DL	10.0 PSF	DATE	03/02/09
BC DL	10.0 PSF	DRW	HCUSR8228 09061011
BC LL	0.0 PSF	HC-ENG	DF/DF
TOT.LD.	40.0 PSF	SEQN-	6141
DUR.FAC.	1.25		
SPACING	SEE ABOVE	JREF-	1TPM8228Z03

(9-057--OWNER BUILDER Travis Williams-Fazzino -- , ** - H9A)

Top chord 2x4 SP #2 Dense
Bot chord 2x4 SP #2 Dense
Webs 2x4 SP #3

Roof overhang supports 2.00 psf soffit load.

(A) 1x4 #3SRB SPF-S or better "T" brace. 80% length of web member. Attach with 8d Box or Gun (0.113"x2.5",min.)nails @ 6" OC.

Bottom chord checked for 10.00 psf non-concurrent live load.

WARNING: Furnish a copy of this DWG to the installation contractor. Special care must be taken during handling, shipping and installation of trusses. See "WARNING" note below.

110 mph wind, 15.00 ft mean hgt, ASCE 7-05, PART._ENC. bldg, not located within 6.50 ft from roof edge, CAT II, EXP B, wind TC DL=5.0 psf, wind BC DL=5.0 psf. Iw=1.00 GCpi(+/-)=0.55

Wind reactions based on MWFRS pressures.

In lieu of structural panels use purlins to brace all flat TC @ 24" OC.

Deflection meets L/240 live and L/180 total load.

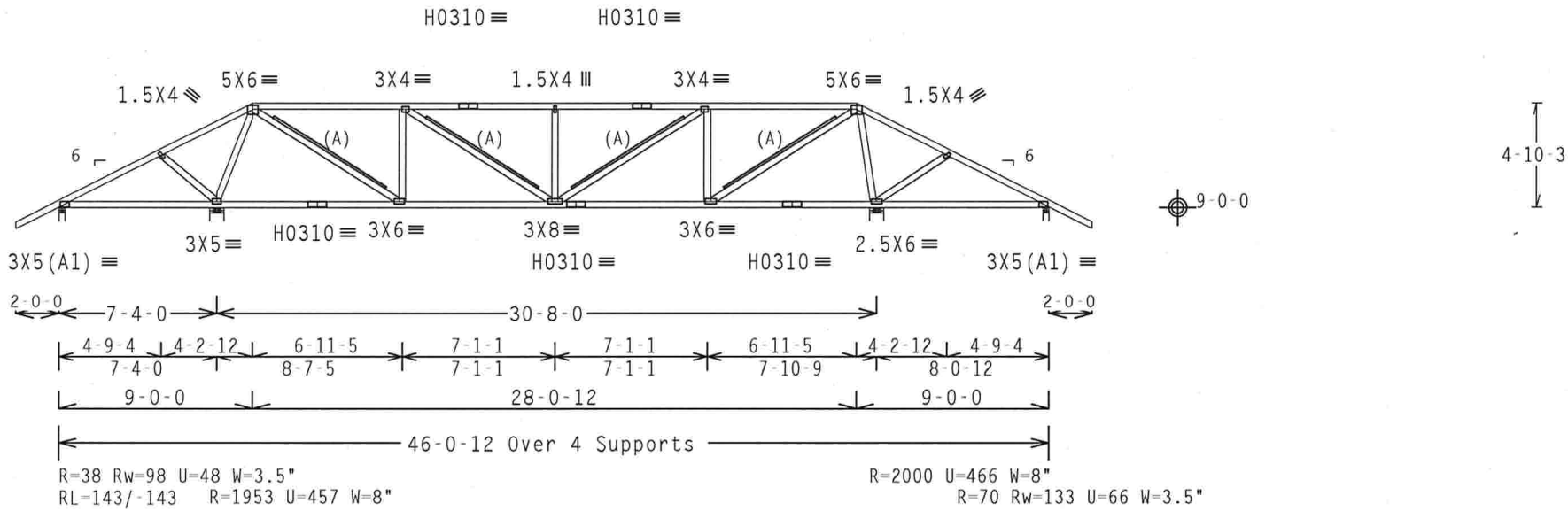

Design Crit: FBC2007Res/TPI-2002(STD)

PLT TYP. 20 Gauge HS,Wave FT/RT=20%(0%)/0(0) 8.07.00 QTY:1 FL/-/4/-/-/R/- Scale =.125"/Ft.

ALPINE
ITW Building Components Group Inc.
Haines City, FL 33844
FL COA #0278

WARNING TRUSSES REQUIRE EXTREME CARE IN FABRICATION, HANDLING, SHIPPING, INSTALLING AND BRACING. REFER TO BCSI (BUILDING COMPONENT SAFETY INFORMATION), PUBLISHED BY TPI (TRUSS PLATE INSTITUTE, 218 NORTH LEE STREET, SUITE 312, ALEXANDRIA, VA. 22314) AND WTCA (WOOD TRUSS COUNCIL OF AMERICA, 6300 ENTERPRISE LANE, MADISON, WI 53719) FOR SAFETY PRACTICES PRIOR TO PERFORMING THESE FUNCTIONS. UNLESS OTHERWISE INDICATED TOP CHORD SHALL HAVE PROPERLY ATTACHED STRUCTURAL PANELS AND BOTTOM CHORD SHALL HAVE A PROPERLY ATTACHED RIGID CEILING.

IMPORTANTFURNISH A COPY OF THIS DESIGN TO THE INSTALLATION CONTRACTOR. ITW BCG, INC. SHALL NOT BE RESPONSIBLE FOR ANY DEVIATION FROM THIS DESIGN; ANY FAILURE TO BUILD THE TRUSS IN COMFORMANCE WITH TPI; OR FABRICATING, HANDLING, SHIPPING, INSTALLING & BRACING OF TRUSSES.
DESIGN CONFORMS WITH APPLICABLE PROVISIONS OF NDS (NATIONAL DESIGN SPEC, BY AF&PA) AND TPI. ITW BCG CONNECTOR PLATES ARE MADE OF 20/18/16GA (W,H/SS/K) ASTM A653 GRADE 40/60 (W, K/H,SS) GALV. STEEL. APPLY PLATES TO EACH FACE OF TRUSS AND. UNLESS OTHERWISE LOCATED ON THIS DESIGN. POSITION PER DRAWINGS 160A-Z. ANY INSPECTION OF PLATES FOLLOWED BY (1) SHALL BE PER ANNEX A3 OF TPI1-2002 SEC.3. A SEAL ON THIS DRAWING INDICATES ACCEPTANCE OF PROFESSIONAL ENGINEERING RESPONSIBILITY SOLELY FOR THE TRUSS COMPONENT DESIGN SHOWN. THE SUITABILITY AND USE OF THIS COMPONENT FOR ANY BUILDING IS THE RESPONSIBILITY OF THE BUILDING DESIGNER PER ANSI/TPI 1 SEC. 2.

DOUGLAS FLEMING LICENSE No. 66648 STATE OF FLORIDA PROFESSIONAL ENGINEER
MAR 03 '09

TC LL	20.0 PSF	REF	R8228- 81775
TC DL	10.0 PSF	DATE	03/02/09
BC DL	10.0 PSF	DRW	HCUSR8228 09061012
BC LL	0.0 PSF	HC-ENG	DF/DF
TOT.LD.	40.0 PSF	SEQN-	6147
DUR.FAC.	1.25		
SPACING	24.0"	JREF-	1TPM8228Z03

(9-057--OWNER BUILDER Travis Williams-Fazzino -- , ** - H11A)

Top chord 2x4 SP #2 Dense
Bot chord 2x4 SP #2 Dense
Webs 2x4 SP #3

Roof overhang supports 2.00 psf soffit load.

(A) 1x4 #3SRB SPF-S or better "T" brace. 80% length of web member. Attach with 8d Box or Gun (0.113"x2.5",min.)nails @ 6" OC.

Bottom chord checked for 10.00 psf non-concurrent live load.

WARNING: Furnish a copy of this DWG to the installation contractor. Special care must be taken during handling, shipping and installation of trusses. See "WARNING" note below.

110 mph wind, 15.00 ft mean hgt, ASCE 7-05, PART._ENC. bldg, not located within 6.50 ft from roof edge, CAT II, EXP B, wind TC DL=5.0 psf, wind BC DL=5.0 psf. Iw=1.00 GCpi(+/-)=0.55

Wind reactions based on MWFRS pressures.

In lieu of structural panels use purlins to brace all flat TC @ 24" OC.

Deflection meets L/240 live and L/180 total load.

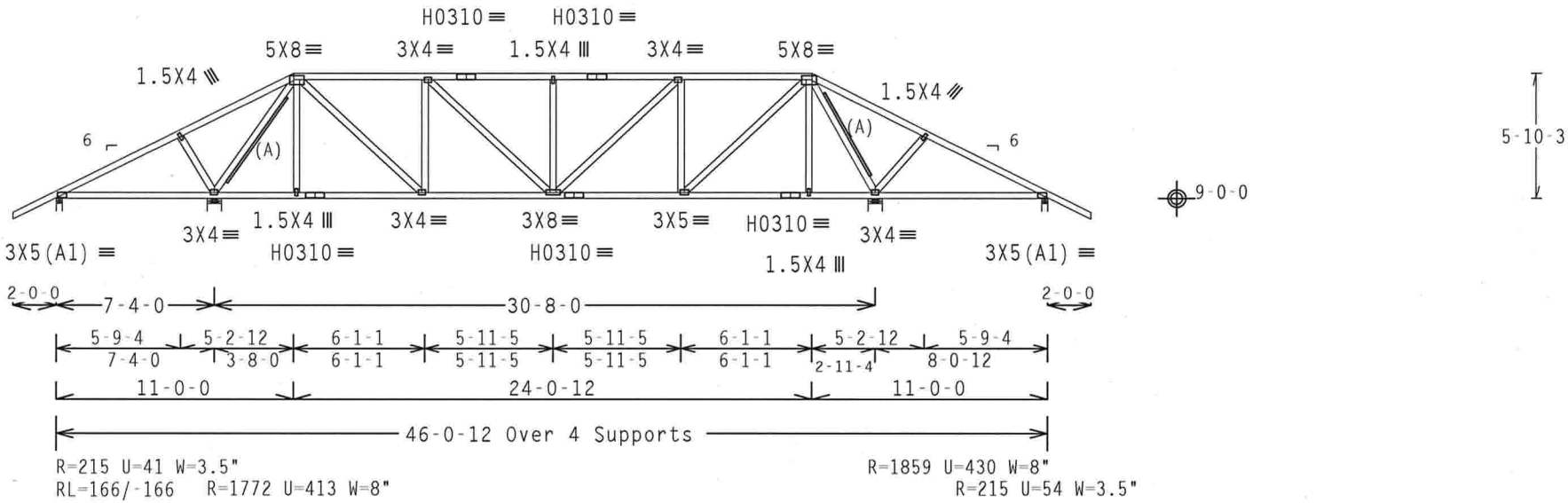

Design Crit: FBC2007Res/TPI-2002(STD)

PLT TYP. 20 Gauge HS,Wave FT/RT=20%(0%)/0(0) 8.07.00.1 QTY:1 FL/-/4/-/-/R/- Scale =.125"/Ft.

ALPINE
ITW Building Components Group Inc.
Haines City, FL 33844
FL COA #0278

WARNING TRUSSES REQUIRE EXTREME CARE IN FABRICATION, HANDLING, SHIPPING, INSTALLING AND BRACING. REFER TO BCSI (BUILDING COMPONENT SAFETY INFORMATION), PUBLISHED BY TPI (TRUSS PLATE INSTITUTE, 218 NORTH LEE STREET, SUITE 312, ALEXANDRIA, VA. 22314) AND WTCA (WOOD TRUSS COUNCIL OF AMERICA, 6300 ENTERPRISE LANE, MADISON, WI 53719) FOR SAFETY PRACTICES PRIOR TO PERFORMING THESE FUNCTIONS. UNLESS OTHERWISE INDICATED TOP CHORD SHALL HAVE PROPERLY ATTACHED STRUCTURAL PANELS AND BOTTOM CHORD SHALL HAVE A PROPERLY ATTACHED RIGID CEILING.

IMPORTANTFURNISH A COPY OF THIS DESIGN TO THE INSTALLATION CONTRACTOR. ITW BCG, INC. SHALL NOT BE RESPONSIBLE FOR ANY DEVIATION FROM THIS DESIGN; ANY FAILURE TO BUILD THE TRUSS IN COMFORMANCE WITH TPI; OR FABRICATING, HANDLING, SHIPPING, INSTALLING & BRACING OF TRUSSES.
DESIGN CONFORMS WITH APPLICABLE PROVISIONS OF NDS (NATIONAL DESIGN SPEC. BY AF&PA) AND TPI. ITW BCG CONNECTOR PLATES ARE MADE OF 20/18/16GA (W,H/SS/K) ASTM A653 GRADE 40/60 (W, K/H,SS) GALV. STEEL. APPLY PLATES TO EACH FACE OF TRUSS AND, UNLESS OTHERWISE LOCATED ON THIS DESIGN, POSITION PER DRAWINGS 160A-Z. ANY INSPECTION OF PLATES FOLLOWED BY (1) SHALL BE PER ANNEX A3 OF TPI1-2002 SEC.3. A SEAL ON THIS DRAWING INDICATES ACCEPTANCE OF PROFESSIONAL ENGINEERING RESPONSIBILITY SOLELY FOR THE TRUSS COMPONENT DESIGN SHOWN. THE SUITABILITY AND USE OF THIS COMPONENT FOR ANY BUILDING IS THE RESPONSIBILITY OF THE BUILDING DESIGNER PER ANSI/TPI 1 SEC. 2.

DOUGLAS FLEMING LICENSE No. 66648 STATE OF FLORIDA PROFESSIONAL ENGINEER

TC LL	20.0 PSF	REF	R8228- 81776
TC DL	10.0 PSF	DATE	03/02/09
BC DL	10.0 PSF	DRW	HCUSR8228 09061013
BC LL	0.0 PSF	HC-ENG	DF/DF
TOT.LD.	40.0 PSF	SEQN-	6153
DUR.FAC.	1.25		
SPACING	24.0"	JREF-	1TPM8228Z03

(9-057--OWNER BUILDER Travis Williams-Fazzino -- , ** - H13A)

Top chord 2x4 SP #2 Dense
Bot chord 2x4 SP #2 Dense
Webs 2x4 SP #3

Roof overhang supports 2.00 psf soffit load.

(A) 1x4 #3SRB SPF-S or better "T" brace. 80% length of web member. Attach with 8d Box or Gun (0.113"x2.5",min.)nails @ 6" OC.

In lieu of structural panels use purlins to brace all flat TC @ 24" OC.

WARNING: Furnish a copy of this DWG to the installation contractor. Special care must be taken during handling, shipping and installation of trusses. See "WARNING" note below.

110 mph wind, 15.00 ft mean hgt, ASCE 7-05, PART._ENC. bldg, not located within 6.50 ft from roof edge, CAT II, EXP B, wind TC DL=5.0 psf, wind BC DL=5.0 psf. Iw=1.00 GCpi(+/-)=0.55

Wind reactions based on MWFRS pressures.

(B) 2x6 #3 or better "T" brace. 80% length of web member. Attach with 16d Box or Gun (0.135"x3.5",min.)nails @ 6" OC.

Bottom chord checked for 10.00 psf non-concurrent live load.

Deflection meets L/240 live and L/180 total load.

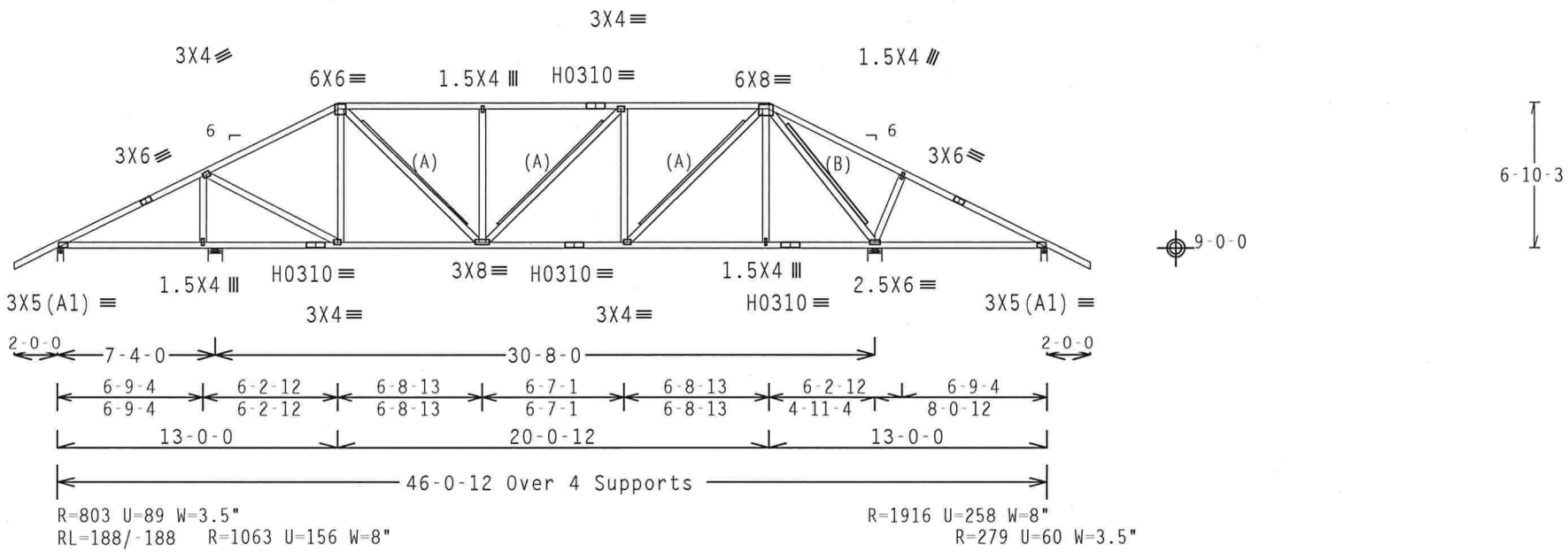

Design Crit: FBC2007Res/TPI-2002(STD)

PLT TYP. 20 Gauge HS,Wave FT/RT=20%(0%)/0(0) 8.07.00 QTY:1 FL/-/4/-/-/R/- Scale =.125"/Ft.

ALPINE
ITW Building Components Group Inc.
Haines City, FL 33844
FL COA #0278

WARNING TRUSSES REQUIRE EXTREME CARE IN FABRICATION, HANDLING, SHIPPING, INSTALLING AND BRACING. REFER TO BCSI (BUILDING COMPONENT SAFETY INFORMATION), PUBLISHED BY TPI (TRUSS PLATE INSTITUTE, 218 NORTH LEE STREET, SUITE 312, ALEXANDRIA, VA, 22314) AND WTCA (WOOD TRUSS COUNCIL OF AMERICA, 6300 ENTERPRISE LANE, MADISON, WI 53719) FOR SAFETY PRACTICES PRIOR TO PERFORMING THESE FUNCTIONS. UNLESS OTHERWISE INDICATED TOP CHORD SHALL HAVE PROPERLY ATTACHED STRUCTURAL PANELS AND BOTTOM CHORD SHALL HAVE A PROPERLY ATTACHED RIGID CEILING.

IMPORTANTFURNISH A COPY OF THIS DESIGN TO THE INSTALLATION CONTRACTOR. ITW BCG, INC. SHALL NOT BE RESPONSIBLE FOR ANY DEVIATION FROM THIS DESIGN; ANY FAILURE TO BUILD THE TRUSS IN COMFORMANCE WITH TPI; OR FABRICATING, HANDLING, SHIPPING, INSTALLING & BRACING OF TRUSSES.
DESIGN CONFORMS WITH APPLICABLE PROVISIONS OF NDS (NATIONAL DESIGN SPEC. BY AF&PA) AND TPI. ITW BCG CONNECTOR PLATES ARE MADE OF 20/18/16GA (W.H/SS/K) ASTM A653 GRADE 40/60 (W. K/H.SS) GALV. STEEL. APPLY PLATES TO EACH FACE OF TRUSS AND. UNLESS OTHERWISE LOCATED ON THIS DESIGN. POSITION PER DRAWINGS 160A-Z. ANY INSPECTION OF PLATES FOLLOWED BY (I) SHALL BE PER ANNEX A3 OF TPI1-2002 SEC.3. A SEAL ON THIS DRAWING INDICATES ACCEPTANCE OF PROFESSIONAL ENGINEERING RESPONSIBILITY SOLELY FOR THE TRUSS COMPONENT DESIGN SHOWN. THE SUITABILITY AND USE OF THIS COMPONENT FOR ANY BUILDING IS THE RESPONSIBILITY OF THE BUILDING DESIGNER PER ANSI/TPI 1 SEC. 2.

DOUGLAS FLEMING LICENSE No. 66648 STATE OF FLORIDA PROFESSIONAL ENGINEER
03 '09

TC LL	20.0 PSF	REF	R8228- 81777
TC DL	10.0 PSF	DATE	03/02/09
BC DL	10.0 PSF	DRW	HCUSR8228 09061014
BC LL	0.0 PSF	HC-ENG	DF/DF
TOT.LD.	40.0 PSF	SEQN-	6164
DUR.FAC.	1.25		
SPACING	24.0"	JREF-	1TPM8228Z03

(9-057--OWNER BUILDER Travis Williams-Fazzino -- , ** - H15A)

Top chord 2x4 SP #2 Dense
Bot chord 2x4 SP #2 Dense
Webs 2x4 SP #3

Roof overhang supports 2.00 psf soffit load.

(A) 1x4 #3SRB SPF-S or better "T" brace. 80% length of web member. Attach with 8d Box or Gun (0.113"x2.5",min.)nails @ 6" OC.

Bottom chord checked for 10.00 psf non-concurrent live load.

WARNING: Furnish a copy of this DWG to the installation contractor. Special care must be taken during handling, shipping and installation of trusses. See "WARNING" note below.

110 mph wind, 15.00 ft mean hgt, ASCE 7-05, PART._ENC. bldg, not located within 6.50 ft from roof edge, CAT II, EXP B, wind TC DL=5.0 psf, wind BC DL=5.0 psf. Iw=1.00 GCpi(+/-)=0.55

Wind reactions based on MWFRS pressures.

In lieu of structural panels use purlins to brace all flat TC @ 24" OC.

Deflection meets L/240 live and L/180 total load.

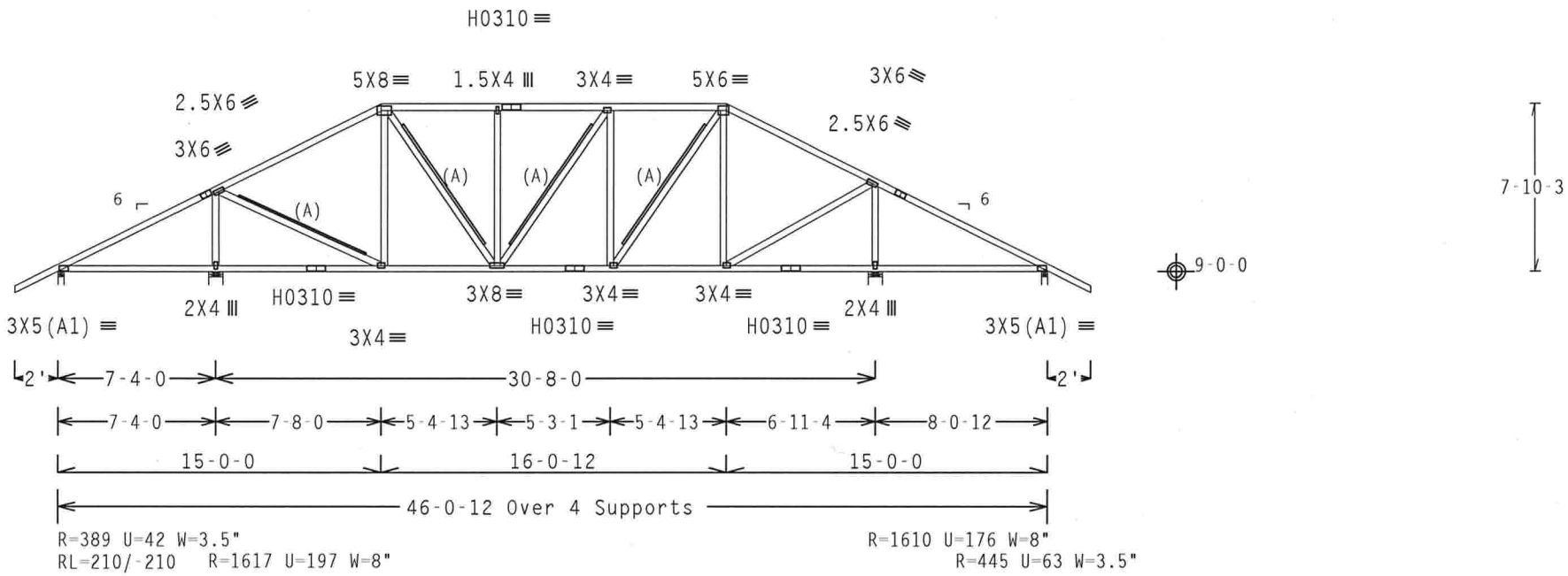

Design Crit: FBC2007Res/TPI-2002(STD)

PLT TYP. 20 Gauge HS,Wave FT/RT=20%(0%)/0(0) 8.07.00.1 QTY:1 FL/-/4/-/-/R/- Scale =.125"/Ft.

ALPINE
ITW Building Components Group Inc.
Haines City, FL 33844
FL COA #0278

WARNING TRUSSES REQUIRE EXTREME CARE IN FABRICATION, HANDLING, SHIPPING, INSTALLING AND BRACING. REFER TO BCSI (BUILDING COMPONENT SAFETY INFORMATION), PUBLISHED BY TPI (TRUSS PLATE INSTITUTE, 218 NORTH LEE STREET, SUITE 312, ALEXANDRIA, VA. 22314) AND WTCA (WOOD TRUSS COUNCIL OF AMERICA, 6300 ENTERPRISE LANE, MADISON, WI 53719) FOR SAFETY PRACTICES PRIOR TO PERFORMING THESE FUNCTIONS. UNLESS OTHERWISE INDICATED TOP CHORD SHALL HAVE PROPERLY ATTACHED STRUCTURAL PANELS AND BOTTOM CHORD SHALL HAVE A PROPERLY ATTACHED RIGID CEILING.

IMPORTANTFURNISH A COPY OF THIS DESIGN TO THE INSTALLATION CONTRACTOR. ITW BCG, INC. SHALL NOT BE RESPONSIBLE FOR ANY DEVIATION FROM THIS DESIGN; ANY FAILURE TO BUILD THE TRUSS IN COMFORMANCE WITH TPI; OR FABRICATING, HANDLING, SHIPPING, INSTALLING & BRACING OF TRUSSES.
DESIGN CONFORMS WITH APPLICABLE PROVISIONS OF NDS (NATIONAL DESIGN SPEC, BY AF&PA) AND TPI. ITW BCG CONNECTOR PLATES ARE MADE OF 20/18/16GA (W,H/SS/K) ASTM A653 GRADE 40/60 (W, K/H,SS) GALV. STEEL. APPLY PLATES TO EACH FACE OF TRUSS AND, UNLESS OTHERWISE LOCATED ON THIS DESIGN, POSITION PER DRAWINGS 160A-Z. ANY INSPECTION OF PLATES FOLLOWED BY (1) SHALL BE PER ANNEX A3 OF TPI1-2002 SEC.3. A SEAL ON THIS DRAWING INDICATES ACCEPTANCE OF PROFESSIONAL ENGINEERING RESPONSIBILITY SOLELY FOR THE TRUSS COMPONENT DESIGN SHOWN. THE SUITABILITY AND USE OF THIS COMPONENT FOR ANY BUILDING IS THE RESPONSIBILITY OF THE BUILDING DESIGNER PER ANSI/TPI 1 SEC. 2.

DOUGLAS FLEMING LICENSE No. 66648 STATE OF FLORIDA PROFESSIONAL ENGINEER
Mar 03 '09

TC LL	20.0 PSF	REF R8228- 81778
TC DL	10.0 PSF	DATE 03/02/09
BC DL	10.0 PSF	DRW HCUSR8228 09061015
BC LL	0.0 PSF	HC-ENG DF/DF
TOT.LD.	40.0 PSF	SEQN- 6173
DUR.FAC.	1.25	
SPACING	24.0"	JREF- 1TPM8228Z03

(9-057--OWNER BUILDER Travis Williams-Fazzino -- , ** - H17A)

Top chord 2x4 SP #2 Dense
Bot chord 2x4 SP #2 Dense
Webs 2x4 SP #3

Roof overhang supports 2.00 psf soffit load.

(A) 1x4 #3SRB SPF-S or better "T" brace. 80% length of web member. Attach with 8d Box or Gun (0.113"x2.5",min.)nails @ 6" OC.

In lieu of structural panels use purlins to brace all flat TC @ 24" OC.

WARNING: Furnish a copy of this DWG to the installation contractor. Special care must be taken during handling, shipping and installation of trusses. See "WARNING" note below.

110 mph wind, 15.00 ft mean hgt, ASCE 7-05, PART._ENC. bldg, not located within 6.50 ft from roof edge, CAT II, EXP B, wind TC DL=5.0 psf, wind BC DL=5.0 psf. Iw=1.00 GCpi(+/-)=0.55

Wind reactions based on MWFRS pressures.

(B) 2x4 #3 or better "T" brace. 80% length of web member. Attach with 16d Box or Gun (0.135"x3.5",min.)nails @ 6" OC.

Bottom chord checked for 10.00 psf non-concurrent live load.

Deflection meets L/240 live and L/180 total load.

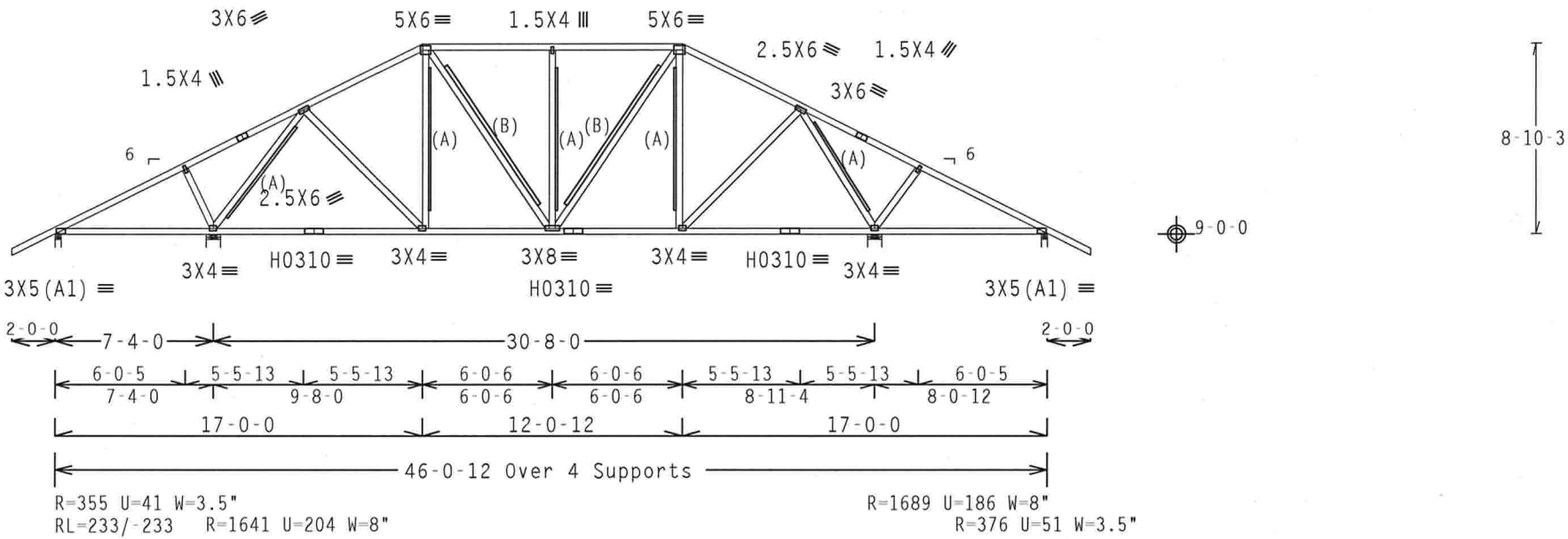

Design Crit: FBC2007Res/TPI-2002(STD)

PLT TYP. 20 Gauge HS,Wave FT/RT=20%(0%)/0(0) 8.07.00 QTY:1 FL/-/4/-/-/R/- Scale =.125"/Ft.

ALPINE
ITW Building Components Group Inc.
Haines City, FL 33844
FL Co[illegible]278

WARNING TRUSSES REQUIRE EXTREME CARE IN FABRICATION, HANDLING, SHIPPING, INSTALLING AND BRACING. REFER TO BCSI (BUILDING COMPONENT SAFETY INFORMATION), PUBLISHED BY TPI (TRUSS PLATE INSTITUTE, 218 NORTH LEE STREET, SUITE 312, ALEXANDRIA, VA. 22314) AND WTCA (WOOD TRUSS COUNCIL OF AMERICA, 6300 ENTERPRISE LANE, MADISON, WI 53719) FOR SAFETY PRACTICES PRIOR TO PERFORMING THESE FUNCTIONS. UNLESS OTHERWISE INDICATED TOP CHORD SHALL HAVE PROPERLY ATTACHED STRUCTURAL PANELS AND BOTTOM CHORD SHALL HAVE A PROPERLY ATTACHED RIGID CEILING.

IMPORTANTFURNISH A COPY OF THIS DESIGN TO THE INSTALLATION CONTRACTOR. ITW BCG, INC. SHALL NOT BE RESPONSIBLE FOR ANY DEVIATION FROM THIS DESIGN; ANY FAILURE TO BUILD THE TRUSS IN COMFORMANCE WITH TPI; OR FABRICATING, HANDLING, SHIPPING, INSTALLING & BRACING OF TRUSSES. DESIGN CONFORMS WITH APPLICABLE PROVISIONS OF NDS (NATIONAL DESIGN SPEC. BY AF&PA) AND TPI. ITW BCG CONNECTOR PLATES ARE MADE OF 20/18/16GA (W,H/SS/K) ASTM A653 GRADE 40/60 (W, K/H,SS) GALV. STEEL. APPLY PLATES TO EACH FACE OF TRUSS AND, UNLESS OTHERWISE LOCATED ON THIS DESIGN, POSITION PER DRAWINGS 160A-Z. ANY INSPECTION OF PLATES FOLLOWED BY (1) SHALL BE PER ANNEX A3 OF TPI1-2002 SEC.3. A SEAL ON THIS DRAWING INDICATES ACCEPTANCE OF PROFESSIONAL ENGINEERING RESPONSIBILITY SOLELY FOR THE TRUSS COMPONENT DESIGN SHOWN. THE SUITABILITY AND USE OF THIS COMPONENT FOR ANY BUILDING IS THE RESPONSIBILITY OF THE BUILDING DESIGNER PER ANSI/TPI 1 SEC. 2.

DOUGLAS FLEMING LICENSE No. 66648 STATE OF FLORIDA PROFESSIONAL ENGINEER
[illegible] 03 '09

TC LL	20.0 PSF	REF	R8228- 81779
TC DL	10.0 PSF	DATE	03/02/09
BC DL	10.0 PSF	DRW	HCUSR8228 09061016
BC LL	0.0 PSF	HC-ENG	DF/DF
TOT.LD.	40.0 PSF	SEQN-	6178
DUR.FAC.	1.25		
SPACING	24.0"	JREF-	1TPM8228Z03

(9-057--OWNER BUILDER Travis Williams-Fazzino -- , ** - H19A)

Top chord 2x4 SP #2 Dense
Bot chord 2x4 SP #2 Dense
Webs 2x4 SP #3

Roof overhang supports 2.00 psf soffit load.

(A) 1x4 #3SRB SPF-S or better "T" brace. 80% length of web member. Attach with 8d Box or Gun (0.113"x2.5",min.)nails @ 6" OC.

In lieu of structural panels use purlins to brace all flat TC @ 24" OC.

WARNING: Furnish a copy of this DWG to the installation contractor. Special care must be taken during handling, shipping and installation of trusses. See "WARNING" note below.

110 mph wind, 15.00 ft mean hgt, ASCE 7-05, PART._ENC. bldg, not located within 6.50 ft from roof edge, CAT II, EXP B, wind TC DL=5.0 psf, wind BC DL=5.0 psf. Iw=1.00 GCpi(+/-)=0.55

Wind reactions based on MWFRS pressures.

(B) 2x4 #3 or better "T" brace. 80% length of web member. Attach with 16d Box or Gun (0.135"x3.5",min.)nails @ 6" OC.

Bottom chord checked for 10.00 psf non-concurrent live load.

Deflection meets L/240 live and L/180 total load.

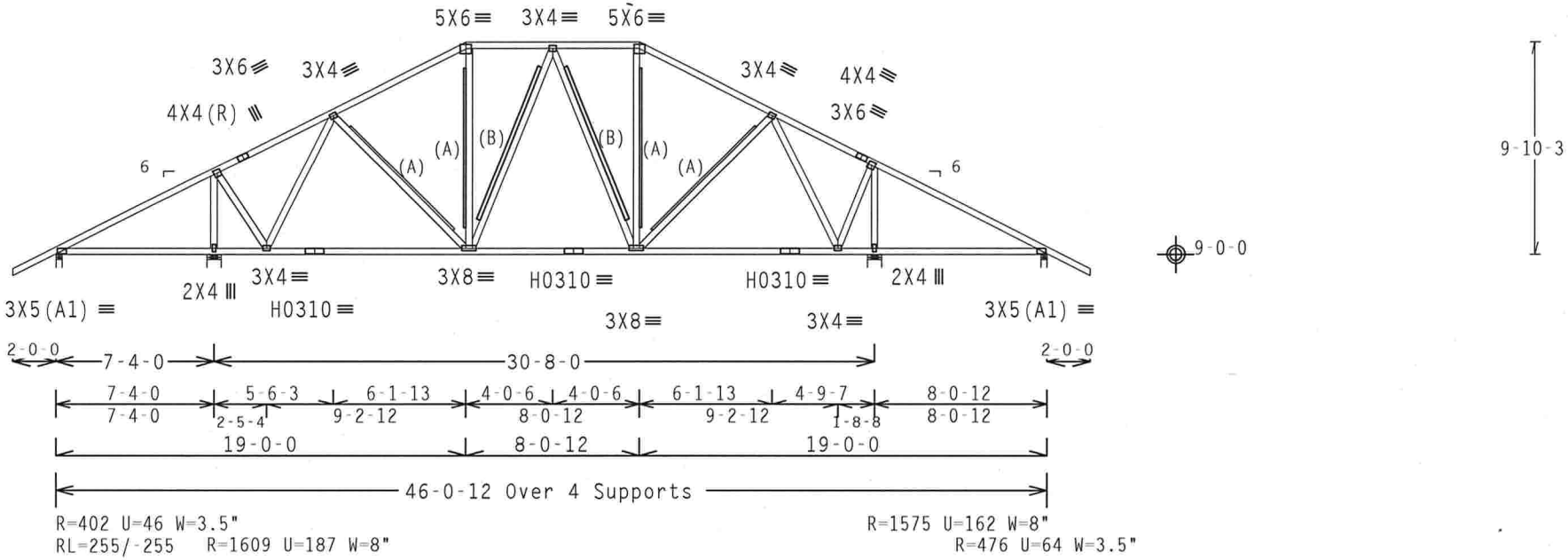

Design Crit: FBC2007Res/TPI-2002(STD)

PLT TYP. 20 Gauge HS,Wave FT/RT=20%(0%)/0(0) 8.07.00 [illegible] QTY:1 FL/-/4/-/-/R/- Scale =.125"/Ft.

ALPINE
ITW Building Components Group Inc.
Haines City, FL 33844
FL COA #0 278

WARNING TRUSSES REQUIRE EXTREME CARE IN FABRICATION, HANDLING, SHIPPING, INSTALLING AND BRACING. REFER TO BCSI (BUILDING COMPONENT SAFETY INFORMATION), PUBLISHED BY TPI (TRUSS PLATE INSTITUTE, 218 NORTH LEE STREET, SUITE 312, ALEXANDRIA, VA, 22314) AND WTCA (WOOD TRUSS COUNCIL OF AMERICA, 6300 ENTERPRISE LANE, MADISON, WI 53719) FOR SAFETY PRACTICES PRIOR TO PERFORMING THESE FUNCTIONS. UNLESS OTHERWISE INDICATED TOP CHORD SHALL HAVE PROPERLY ATTACHED STRUCTURAL PANELS AND BOTTOM CHORD SHALL HAVE A PROPERLY ATTACHED RIGID CEILING.

IMPORTANTFURNISH A COPY OF THIS DESIGN TO THE INSTALLATION CONTRACTOR. ITW BCG, INC. SHALL NOT BE RESPONSIBLE FOR ANY DEVIATION FROM THIS DESIGN; ANY FAILURE TO BUILD THE TRUSS IN CONFORMANCE WITH TPI; OR FABRICATING, HANDLING, SHIPPING, INSTALLING & BRACING OF TRUSSES. DESIGN CONFORMS WITH APPLICABLE PROVISIONS OF NDS (NATIONAL DESIGN SPEC, BY AF&PA) AND TPI. ITW BCG CONNECTOR PLATES ARE MADE OF 20/18/16GA (W,H/SS/K) ASTM A653 GRADE 40/60 (W, K/H,SS) GALV. STEEL. APPLY PLATES TO EACH FACE OF TRUSS AND, UNLESS OTHERWISE LOCATED ON THIS DESIGN, POSITION PER DRAWINGS 160A-Z. ANY INSPECTION OF PLATES FOLLOWED BY (1) SHALL BE PER ANNEX A3 OF TPI1-2002 SEC.3. A SEAL ON THIS DRAWING INDICATES ACCEPTANCE OF PROFESSIONAL ENGINEERING RESPONSIBILITY SOLELY FOR THE TRUSS COMPONENT DESIGN SHOWN. THE SUITABILITY AND USE OF THIS COMPONENT FOR ANY BUILDING IS THE RESPONSIBILITY OF THE BUILDING DESIGNER PER ANSI/TPI 1 SEC. 2.

DOUGLAS FLEMING LICENSE No. 66648 STATE OF FLORIDA PROFESSIONAL ENGINEER

[illegible]03 '09

TC LL	20.0 PSF	REF R8228- 81780
TC DL	10.0 PSF	DATE 03/02/09
BC DL	10.0 PSF	DRW HCUSR8228 09061017
BC LL	0.0 PSF	HC-ENG DF/DF
TOT.LD.	40.0 PSF	SEQN- 6184
DUR.FAC.	1.25	
SPACING	24.0"	JREF- 1TPM8228Z03

(9-057--OWNER BUILDER Travis Williams-Fazzino -- , ** - H21A)

Top chord 2x4 SP #2 Dense
Bot chord 2x4 SP #2 Dense
Webs 2x4 SP #3

Roof overhang supports 2.00 psf soffit load.

(A) Continuous lateral bracing equally spaced on member.

Truss passed check for 20 psf additional bottom chord live load in areas with 42"-high x 24"-wide clearance.

Deflection meets L/240 live and L/180 total load.

110 mph wind, 15.00 ft mean hgt, ASCE 7-05, PART._ENC. bldg, not located within 6.50 ft from roof edge, CAT II, EXP B, wind TC DL=5.0 psf, wind BC DL=5.0 psf. Iw=1.00 GCpi(+/-)=0.55

Wind reactions based on MWFRS pressures.

In lieu of structural panels use purlins to brace all flat TC @ 24" OC.

Bottom chord checked for 10.00 psf non-concurrent live load.

WARNING: Furnish a copy of this DWG to the installation contractor. Special care must be taken during handling, shipping and installation of trusses. See "WARNING" note below.

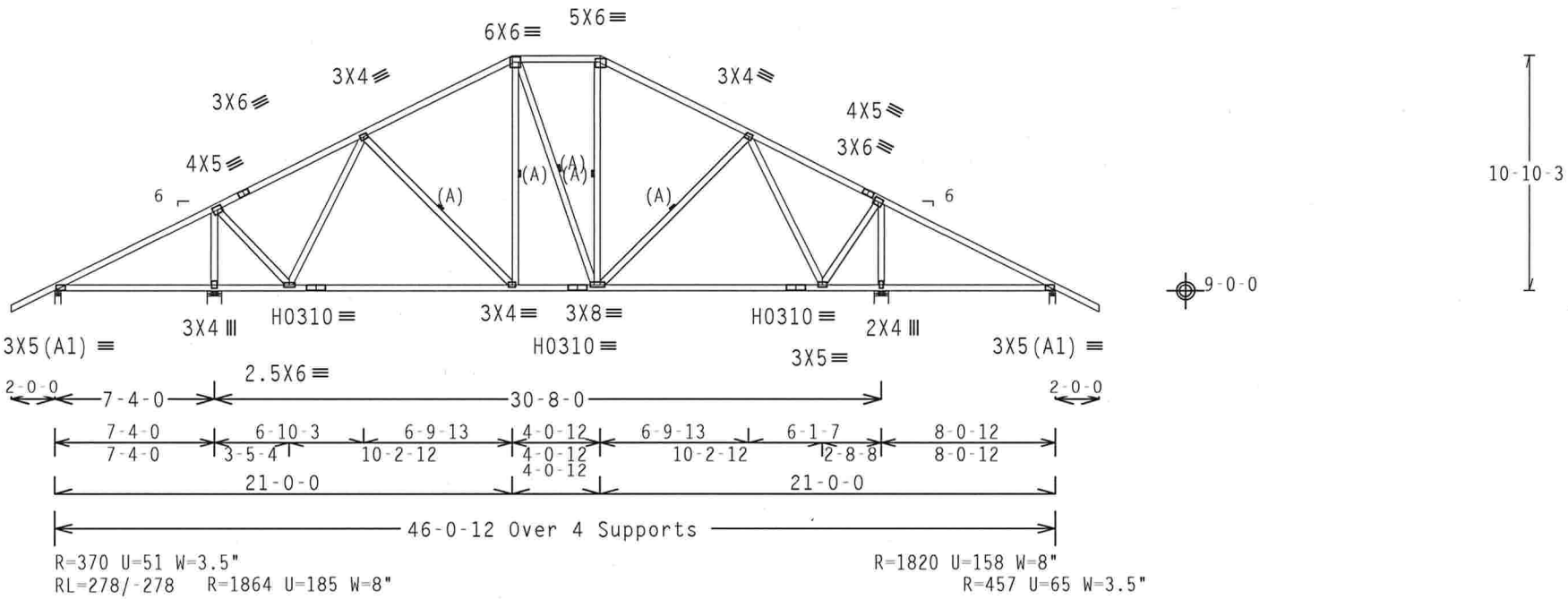

Design Crit: FBC2007Res/TPI-2002(STD)

PLT TYP. 20 Gauge HS,Wave FT/RT=20%(0%)/0(0) 8.07.00 QTY:6 FL/-/4/-/-/R/- Scale =.125"/Ft.

ALPINE
ITW Building Components Group Inc.
Haines City, FL 33844
FL COA #0 278

WARNING TRUSSES REQUIRE EXTREME CARE IN FABRICATION, HANDLING, SHIPPING, INSTALLING AND BRACING. REFER TO BCSI (BUILDING COMPONENT SAFETY INFORMATION), PUBLISHED BY TPI (TRUSS PLATE INSTITUTE, 218 NORTH LEE STREET, SUITE 312, ALEXANDRIA, VA, 22314) AND WTCA (WOOD TRUSS COUNCIL OF AMERICA, 6300 ENTERPRISE LANE, MADISON, WI 53719) FOR SAFETY PRACTICES PRIOR TO PERFORMING THESE FUNCTIONS. UNLESS OTHERWISE INDICATED TOP CHORD SHALL HAVE PROPERLY ATTACHED STRUCTURAL PANELS AND BOTTOM CHORD SHALL HAVE A PROPERLY ATTACHED RIGID CEILING.

IMPORTANTFURNISH A COPY OF THIS DESIGN TO THE INSTALLATION CONTRACTOR. ITW BCG, INC. SHALL NOT BE RESPONSIBLE FOR ANY DEVIATION FROM THIS DESIGN; ANY FAILURE TO BUILD THE TRUSS IN CONFORMANCE WITH TPI; OR FABRICATING, HANDLING, SHIPPING, INSTALLING & BRACING OF TRUSSES. DESIGN CONFORMS WITH APPLICABLE PROVISIONS OF NDS (NATIONAL DESIGN SPEC. BY AF&PA) AND TPI. ITW BCG CONNECTOR PLATES ARE MADE OF 20/18/16GA (W.H/SS/K) ASTM A653 GRADE 40/60 (W. K/H.SS) GALV. STEEL. APPLY PLATES TO EACH FACE OF TRUSS AND, UNLESS OTHERWISE LOCATED ON THIS DESIGN, POSITION PER DRAWINGS 160A-Z. ANY INSPECTION OF PLATES FOLLOWED BY (1) SHALL BE PER ANNEX A3 OF TPI1-2002 SEC.3. A SEAL ON THIS DRAWING INDICATES ACCEPTANCE OF PROFESSIONAL ENGINEERING RESPONSIBILITY SOLELY FOR THE TRUSS COMPONENT DESIGN SHOWN. THE SUITABILITY AND USE OF THIS COMPONENT FOR ANY BUILDING IS THE RESPONSIBILITY OF THE BUILDING DESIGNER PER ANSI/TPI 1 SEC. 2.

DOUGLAS FLEMING LICENSE No. 66648 STATE OF FLORIDA PROFESSIONAL ENGINEER
03 '09

TC LL	20.0 PSF	REF R8228- 81781
TC DL	10.0 PSF	DATE 03/02/09
BC DL	10.0 PSF	DRW HCUSR8228 09061018
BC LL	0.0 PSF	HC-ENG DF/DF
TOT.LD.	40.0 PSF	SEQN- 6192
DUR.FAC.	1.25	
SPACING	24.0"	JREF- 1TPM8228Z03

Top chord 2x4 SP #2 Dense
Bot chord 2x4 SP #2 Dense
Webs 2x4 SP #3

Bottom chord checked for 10.00 psf non-concurrent live load.

Deflection meets L/240 live and L/180 total load.

THE BUILDING DESIGNER IS RESPONSIBLE FOR THE DESIGN OF THE ROOF, FLOOR AND CEILING DIAPHRAGMS, GABLE END SHEAR WALLS, AND SUPPORTING SHEAR WALLS. DIAPHRAGMS AND SHEAR WALLS MUST PROVIDE CONTINUOUS LATERAL RESTRAINT TO THE GABLE END. ALL CONNECTIONS ARE TO BE PROVIDED BY THE BUILDING DESIGNER.

See DWGS A11030050109 & GBLLETIN0109 for more requirements.

110 mph wind, 15.00 ft mean hgt, ASCE 7-05, CLOSED bldg, Located anywhere in roof, CAT II, EXP B, wind TC DL=5.0 psf, wind BC DL=5.0 psf. Iw=1.00 GCpi(+/-)=0.18

Wind reactions based on MWFRS pressures.

See DWG VAL1300109 for valley details.

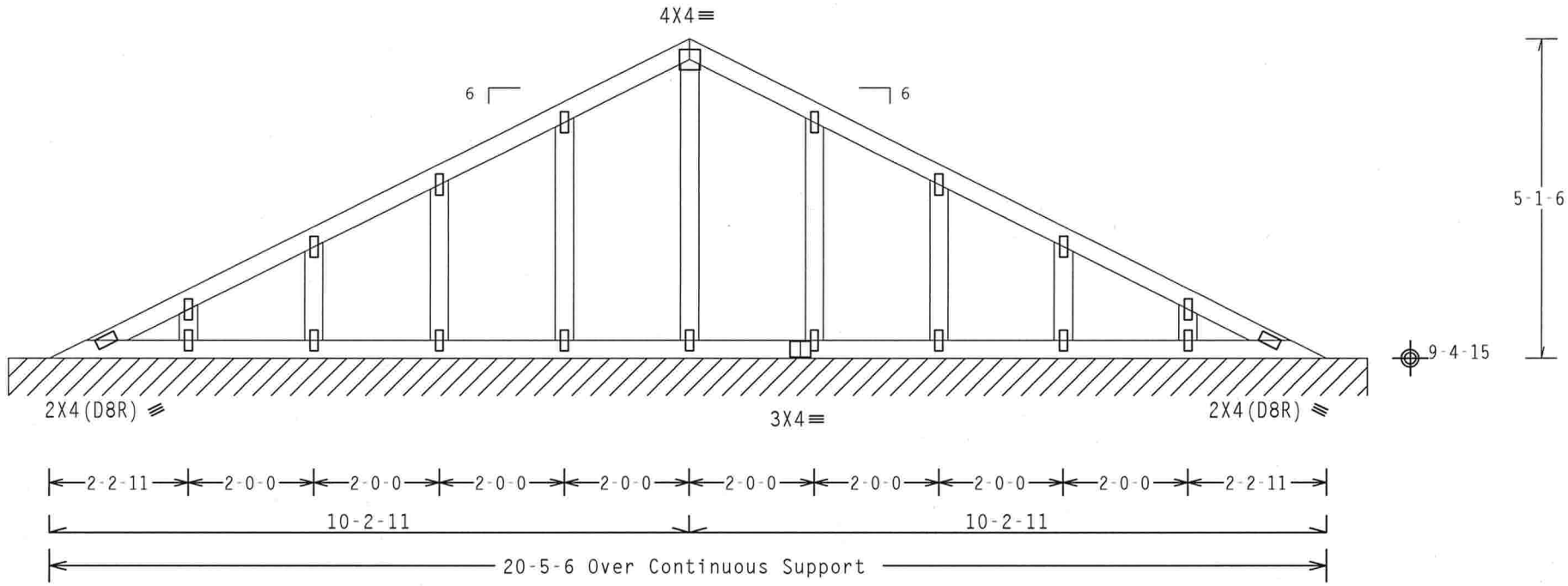

R=109 PLF U=6 PLF W=21-9-1
RL=4/-4 PLF

Note: All Plates Are 1.5X4 Except As Shown.

Design Crit: FBC2007Res/TPI-2002(STD)

PLT TYP. Wave FT/RT=20%(0%)/0(0) 8.07.00 QTY:1 FL/-/4/-/-/R/- Scale =.375"/Ft.

ALPINE
ITW Building Components Group Inc.
Haines City, FL 33844
FL COA #0 278

WARNING TRUSSES REQUIRE EXTREME CARE IN FABRICATION. HANDLING. SHIPPING. INSTALLING AND BRACING. REFER TO BCSI (BUILDING COMPONENT SAFETY INFORMATION). PUBLISHED BY TPI (TRUSS PLATE INSTITUTE, 218 NORTH LEE STREET, SUITE 312, ALEXANDRIA, VA. 22314) AND WTCA (WOOD TRUSS COUNCIL OF AMERICA, 6300 ENTERPRISE LANE, MADISON, WI 53719) FOR SAFETY PRACTICES PRIOR TO PERFORMING THESE FUNCTIONS. UNLESS OTHERWISE INDICATED TOP CHORD SHALL HAVE PROPERLY ATTACHED STRUCTURAL PANELS AND BOTTOM CHORD SHALL HAVE A PROPERLY ATTACHED RIGID CEILING.

IMPORTANTFURNISH A COPY OF THIS DESIGN TO THE INSTALLATION CONTRACTOR. ITW BCG, INC. SHALL NOT BE RESPONSIBLE FOR ANY DEVIATION FROM THIS DESIGN; ANY FAILURE TO BUILD THE TRUSS IN CONFORMANCE WITH TPI; OR FABRICATING, HANDLING, SHIPPING, INSTALLING & BRACING OF TRUSSES. DESIGN CONFORMS WITH APPLICABLE PROVISIONS OF NDS (NATIONAL DESIGN SPEC. BY AF&PA) AND TPI. ITW BCG CONNECTOR PLATES ARE MADE OF 20/18/16GA (W,H/SS/K) ASTM A653 GRADE 40/60 (W, K/H,SS) GALV. STEEL. APPLY PLATES TO EACH FACE OF TRUSS AND, UNLESS OTHERWISE LOCATED ON THIS DESIGN, POSITION PER DRAWINGS 160A-Z. ANY INSPECTION OF PLATES FOLLOWED BY (I) SHALL BE PER ANNEX A3 OF TPI1-2002 SEC.3. A SEAL ON THIS DRAWING INDICATES ACCEPTANCE OF PROFESSIONAL ENGINEERING RESPONSIBILITY SOLELY FOR THE TRUSS COMPONENT DESIGN SHOWN. THE SUITABILITY AND USE OF THIS COMPONENT FOR ANY BUILDING IS THE RESPONSIBILITY OF THE BUILDING DESIGNER PER ANSI/TPI 1 SEC. 2.

DOUGLAS FLEMING LICENSE No. 66648 STATE OF FLORIDA PROFESSIONAL ENGINEER
03 '09

TC LL	20.0 PSF	REF	R8228- 81782
TC DL	10.0 PSF	DATE	03/02/09
BC DL	10.0 PSF	DRW	HCUSR8228 09061019
BC LL	0.0 PSF	HC-ENG	DF/DF
TOT.LD.	40.0 PSF	SEQN-	6348
DUR.FAC.	1.25		
SPACING	SEE ABOVE	JREF-	1TPM8228Z03

Top chord 2x4 SP #2 Dense
Bot chord 2x4 SP #2 Dense
Webs 2x4 SP #3

Bottom chord checked for 10.00 psf non-concurrent live load.

Deflection meets L/240 live and L/180 total load.

110 mph wind, 15.00 ft mean hgt, ASCE 7-05, CLOSED bldg, Located anywhere in roof, CAT II, EXP B, wind TC DL=5.0 psf, wind BC DL=5.0 psf. Iw=1.00 GCpi(+/-)=0.18

Wind reactions based on MWFRS pressures.

See DWG VAL1300109 for valley details.

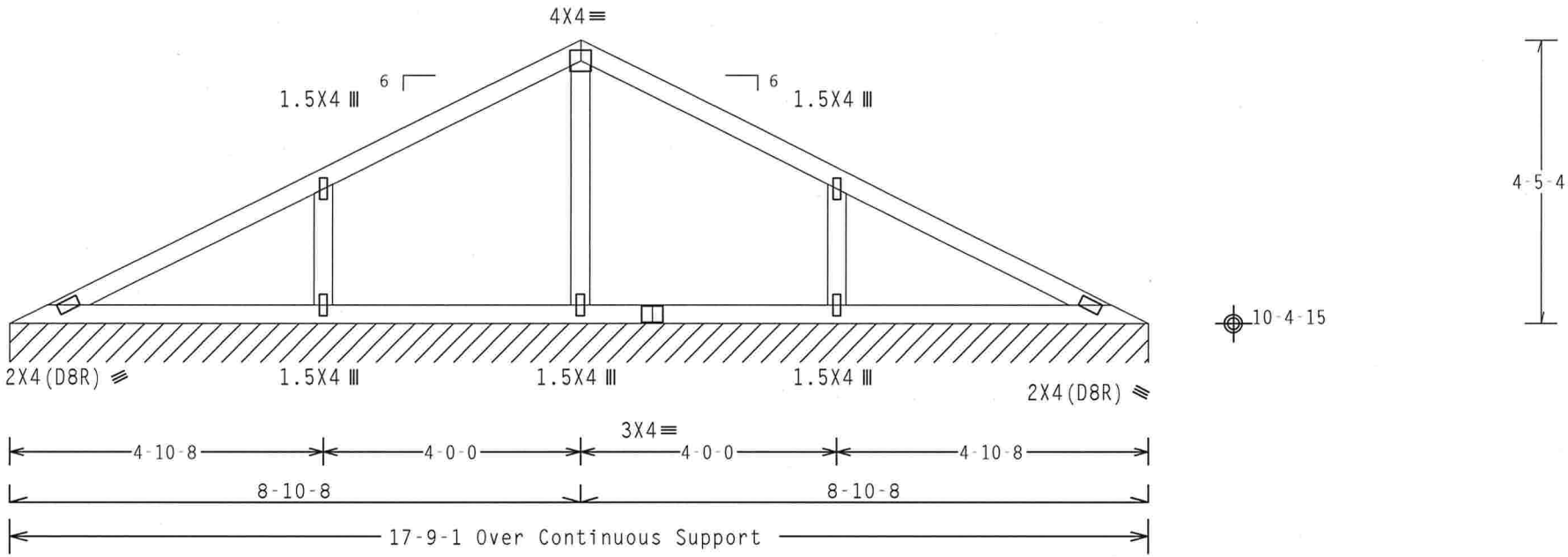

R=82 PLF U=6 PLF W=17-9-1
RL=5/-5 PLF

Design Crit: FBC2007Res/TPI-2002(STD)

PLT TYP. Wave FT/RT=20%(0%)/0(0) 8.07.00 QTY:1 FL/-/4/-/-/R/- Scale =.375"/Ft.

ALPINE
ITW Building Components Group Inc.
Haines City, FL 33844
FL COA #0 278

WARNING TRUSSES REQUIRE EXTREME CARE IN FABRICATION, HANDLING, SHIPPING, INSTALLING AND BRACING. REFER TO BCSI (BUILDING COMPONENT SAFETY INFORMATION), PUBLISHED BY TPI (TRUSS PLATE INSTITUTE, 218 NORTH LEE STREET, SUITE 312, ALEXANDRIA, VA, 22314) AND WTCA (WOOD TRUSS COUNCIL OF AMERICA, 6300 ENTERPRISE LANE, MADISON, WI 53719) FOR SAFETY PRACTICES PRIOR TO PERFORMING THESE FUNCTIONS. UNLESS OTHERWISE INDICATED TOP CHORD SHALL HAVE PROPERLY ATTACHED STRUCTURAL PANELS AND BOTTOM CHORD SHALL HAVE A PROPERLY ATTACHED RIGID CEILING.

IMPORTANTFURNISH A COPY OF THIS DESIGN TO THE INSTALLATION CONTRACTOR. ITW BCG, INC. SHALL NOT BE RESPONSIBLE FOR ANY DEVIATION FROM THIS DESIGN; ANY FAILURE TO BUILD THE TRUSS IN COMFORMANCE WITH TPI; OR FABRICATING, HANDLING, SHIPPING, INSTALLING & BRACING OF TRUSSES. DESIGN CONFORMS WITH APPLICABLE PROVISIONS OF NDS (NATIONAL DESIGN SPEC. BY AF&PA) AND TPI. ITW BCG CONNECTOR PLATES ARE MADE OF 20/18/16GA (W,H/SS/K) ASTM A653 GRADE 40/60 (W, K/H,SS) GALV. STEEL. APPLY PLATES TO EACH FACE OF TRUSS AND, UNLESS OTHERWISE LOCATED ON THIS DESIGN, POSITION PER DRAWINGS 160A-Z. ANY INSPECTION OF PLATES FOLLOWED BY (1) SHALL BE PER ANNEX A3 OF TPI1-2002 SEC.3. A SEAL ON THIS DRAWING INDICATES ACCEPTANCE OF PROFESSIONAL ENGINEERING RESPONSIBILITY SOLELY FOR THE TRUSS COMPONENT DESIGN SHOWN. THE SUITABILITY AND USE OF THIS COMPONENT FOR ANY BUILDING IS THE RESPONSIBILITY OF THE BUILDING DESIGNER PER ANSI/TPI 1 SEC. 2.

DOUGLAS FLEMING LICENSE No. 66648 STATE OF FLORIDA PROFESSIONAL ENGINEER

03 '09

TC LL	20.0 PSF	REF	R8228- 81783
TC DL	10.0 PSF	DATE	03/02/09
BC DL	10.0 PSF	DRW	HCUSR8228 09061003
BC LL	0.0 PSF	HC-ENG	DF/DF *
TOT.LD.	40.0 PSF	SEQN-	6352
DUR.FAC.	1.25		
SPACING	24.0"	JREF-	1TPM8228Z03

Top chord 2x4 SP #2 Dense
Bot chord 2x4 SP #2 Dense
Webs 2x4 SP #3

Bottom chord checked for 10.00 psf non-concurrent live load.

Deflection meets L/240 live and L/180 total load.

110 mph wind, 15.00 ft mean hgt, ASCE 7-05, CLOSED bldg, not located within 4.50 ft from roof edge, CAT II, EXP B, wind TC DL=5.0 psf, wind BC DL=5.0 psf. Iw=1.00 GCpi(+/-)=0.18

Wind reactions based on MWFRS pressures.

See DWG VAL1300109 for valley details.

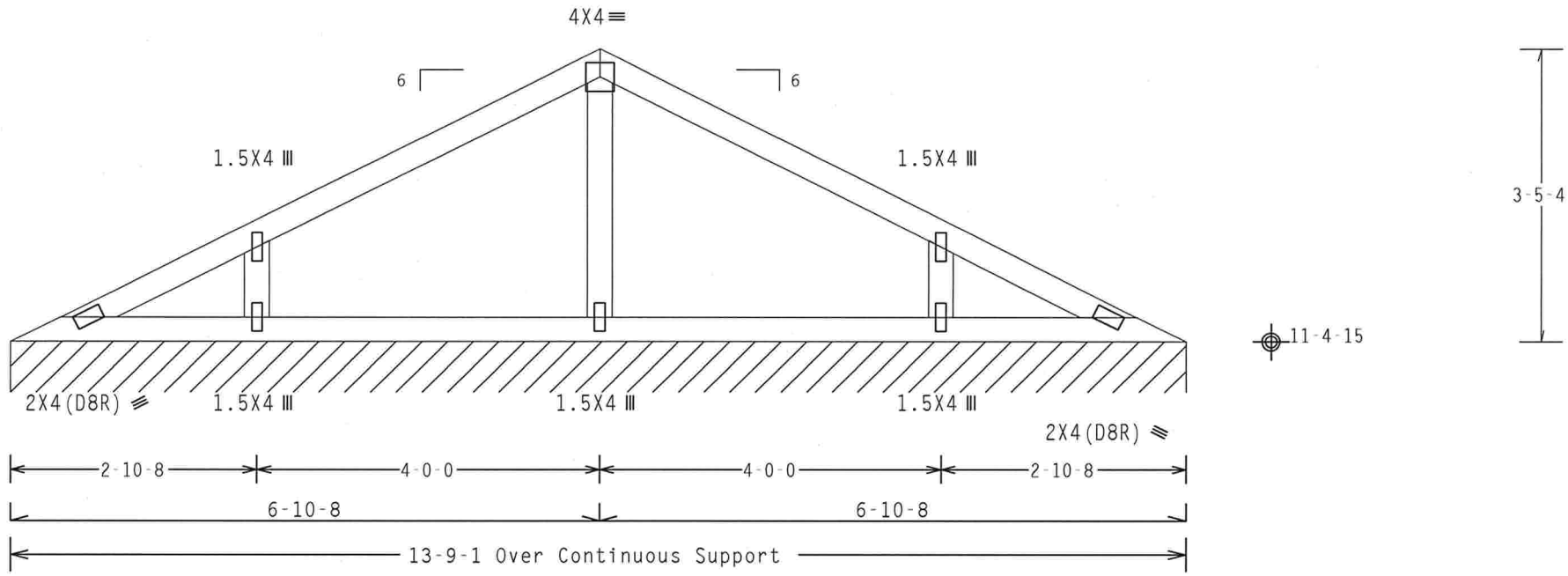

R=82 PLF U=6 PLF W=13-9-1
RL=5/-5 PLF

Design Crit: FBC2007Res/TPI-2002(STD)

PLT TYP. Wave FT/RT=20%(0%)/0(0) 8.07.00 QTY:1 FL/-/4/-/-/R/- Scale =.5"/Ft.

ALPINE
ITW Building Components Group Inc.
Haines City, FL 33844
FL COA #0 278

WARNING TRUSSES REQUIRE EXTREME CARE IN FABRICATION, HANDLING, SHIPPING, INSTALLING AND BRACING. REFER TO BCSI (BUILDING COMPONENT SAFETY INFORMATION), PUBLISHED BY TPI (TRUSS PLATE INSTITUTE, 218 NORTH LEE STREET, SUITE 312, ALEXANDRIA, VA, 22314) AND WTCA (WOOD TRUSS COUNCIL OF AMERICA, 6300 ENTERPRISE LANE, MADISON, WI 53719) FOR SAFETY PRACTICES PRIOR TO PERFORMING THESE FUNCTIONS. UNLESS OTHERWISE INDICATED TOP CHORD SHALL HAVE PROPERLY ATTACHED STRUCTURAL PANELS AND BOTTOM CHORD SHALL HAVE A PROPERLY ATTACHED RIGID CEILING.

IMPORTANTFURNISH A COPY OF THIS DESIGN TO THE INSTALLATION CONTRACTOR. ITW BCG, INC. SHALL NOT BE RESPONSIBLE FOR ANY DEVIATION FROM THIS DESIGN; ANY FAILURE TO BUILD THE TRUSS IN CONFORMANCE WITH TPI; OR FABRICATING, HANDLING, SHIPPING, INSTALLING & BRACING OF TRUSSES. DESIGN CONFORMS WITH APPLICABLE PROVISIONS OF NDS (NATIONAL DESIGN SPEC. BY AF&PA) AND TPI. ITW BCG CONNECTOR PLATES ARE MADE OF 20/18/16GA (W,H/SS/K) ASTM A653 GRADE 40/60 (W, K/H,SS) GALV. STEEL. APPLY PLATES TO EACH FACE OF TRUSS AND, UNLESS OTHERWISE LOCATED ON THIS DESIGN, POSITION PER DRAWINGS 160A-Z. ANY INSPECTION OF PLATES FOLLOWED BY (1) SHALL BE PER ANNEX A3 OF TPI1-2002 SEC.3. A SEAL ON THIS DRAWING INDICATES ACCEPTANCE OF PROFESSIONAL ENGINEERING RESPONSIBILITY SOLELY FOR THE TRUSS COMPONENT DESIGN SHOWN. THE SUITABILITY AND USE OF THIS COMPONENT FOR ANY BUILDING IS THE RESPONSIBILITY OF THE BUILDING DESIGNER PER ANSI/TPI 1 SEC. 2.

DOUGLAS FLEMING LICENSE No. 66648 STATE OF FLORIDA PROFESSIONAL ENGINEER

03 '09

TC LL	20.0 PSF	REF R8228- 81784
TC DL	10.0 PSF	DATE 03/02/09
BC DL	10.0 PSF	DRW HCUSR8228 09061004
BC LL	0.0 PSF	HC-ENG DF/DF *
TOT.LD.	40.0 PSF	SEQN- 6354
DUR.FAC.	1.25	
SPACING	24.0"	JREF- 1TPM8228Z03

(9-057--OWNER BUILDER Travis Williams-Fazzino -- , ** - V4)

Top chord 2x4 SP #2 Dense
Bot chord 2x4 SP #2 Dense
Webs 2x4 SP #3

Bottom chord checked for 10.00 psf non-concurrent live load.

Deflection meets L/240 live and L/180 total load.

110 mph wind, 15.00 ft mean hgt, ASCE 7-05, CLOSED bldg, not located within 4.50 ft from roof edge, CAT II, EXP B, wind TC DL=5.0 psf, wind BC DL=5.0 psf. Iw=1.00 GCpi(+/-)=0.18

Wind reactions based on MWFRS pressures.

See DWG VAL1300109 for valley details.

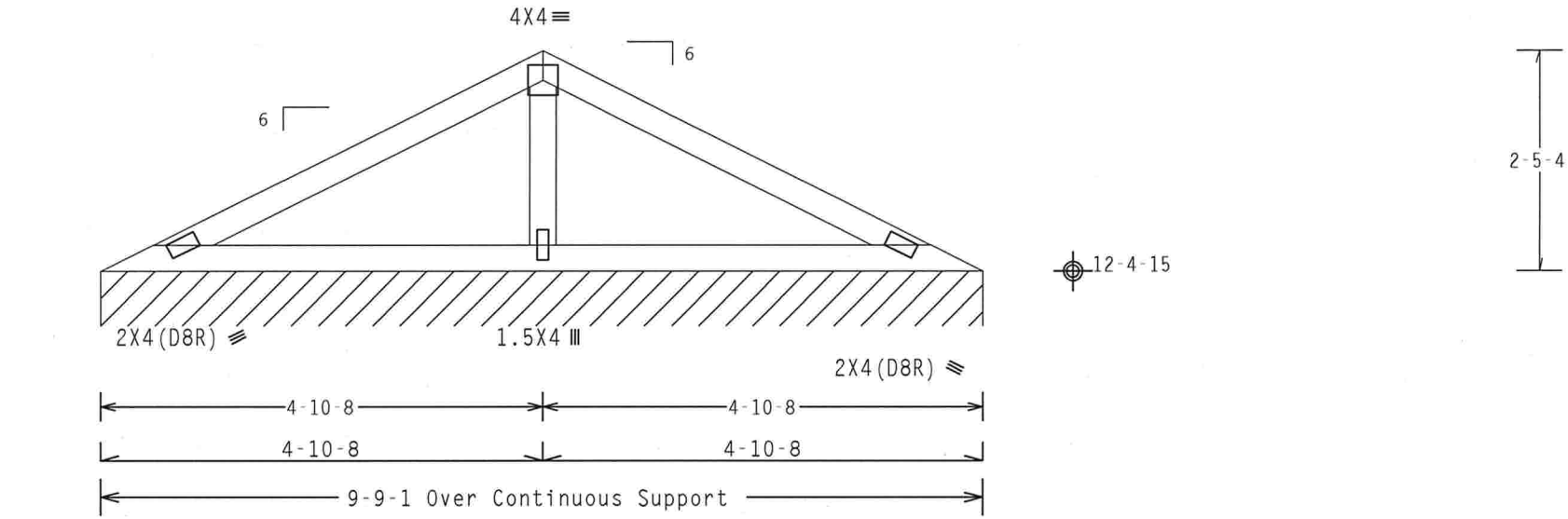

R=82 PLF U=5 PLF W=9-9-1
RL=4/-4 PLF

Design Crit: FBC2007Res/TPI-2002(STD)

PLT TYP. Wave FT/RT=20%(0%)/0(0) 8.07.00 [illegible] QTY:1 FL/-/4/-/-/R/- Scale =.5"/Ft.

ALPINE
ITW Building Components Group Inc.
Haines City, FL 33844
FL COA #0 278

WARNING TRUSSES REQUIRE EXTREME CARE IN FABRICATION, HANDLING, SHIPPING, INSTALLING AND BRACING. REFER TO BCSI (BUILDING COMPONENT SAFETY INFORMATION), PUBLISHED BY TPI (TRUSS PLATE INSTITUTE, 218 NORTH LEE STREET, SUITE 312, ALEXANDRIA, VA, 22314) AND WTCA (WOOD TRUSS COUNCIL OF AMERICA, 6300 ENTERPRISE LANE, MADISON, WI 53719) FOR SAFETY PRACTICES PRIOR TO PERFORMING THESE FUNCTIONS. UNLESS OTHERWISE INDICATED TOP CHORD SHALL HAVE PROPERLY ATTACHED STRUCTURAL PANELS AND BOTTOM CHORD SHALL HAVE A PROPERLY ATTACHED RIGID CEILING.

IMPORTANTFURNISH A COPY OF THIS DESIGN TO THE INSTALLATION CONTRACTOR. ITW BCG, INC. SHALL NOT BE RESPONSIBLE FOR ANY DEVIATION FROM THIS DESIGN; ANY FAILURE TO BUILD THE TRUSS IN COMFORMANCE WITH TPI; OR FABRICATING, HANDLING, SHIPPING, INSTALLING & BRACING OF TRUSSES.
DESIGN CONFORMS WITH APPLICABLE PROVISIONS OF NDS (NATIONAL DESIGN SPEC. BY AF&PA) AND TPI. ITW BCG CONNECTOR PLATES ARE MADE OF 20/18/16GA (W,H/SS/K) ASTM A653 GRADE 40/60 (W, K/H,SS) GALV. STEEL. APPLY PLATES TO EACH FACE OF TRUSS AND, UNLESS OTHERWISE LOCATED ON THIS DESIGN, POSITION PER DRAWINGS 160A-Z. ANY INSPECTION OF PLATES FOLLOWED BY (I) SHALL BE PER ANNEX A3 OF TPI1-2002 SEC.3. A SEAL ON THIS DRAWING INDICATES ACCEPTANCE OF PROFESSIONAL ENGINEERING RESPONSIBILITY SOLELY FOR THE TRUSS COMPONENT DESIGN SHOWN. THE SUITABILITY AND USE OF THIS COMPONENT FOR ANY BUILDING IS THE RESPONSIBILITY OF THE BUILDING DESIGNER PER ANSI/TPI 1 SEC. 2.

DOUGLAS FLEMING LICENSE No. 66648 STATE OF FLORIDA PROFESSIONAL ENGINEER

03 '09

TC LL	20.0 PSF	REF	R8228- 81785
TC DL	10.0 PSF	DATE	03/02/09
BC DL	10.0 PSF	DRW	HCUSR8228 09061005
BC LL	0.0 PSF	HC-ENG	DF/DF *
TOT.LD.	40.0 PSF	SEQN-	6356
DUR.FAC.	1.25		
SPACING	24.0"	JREF-	1TPM8228Z03

Top chord 2x4 SP #2 Dense
Bot chord 2x4 SP #2 Dense
Webs 2x4 SP #3

Bottom chord checked for 10.00 psf non-concurrent live load.

Deflection meets L/240 live and L/180 total load.

110 mph wind, 15.00 ft mean hgt, ASCE 7-05, CLOSED bldg, not located within 4.50 ft from roof edge, CAT II, EXP B, wind TC DL=5.0 psf, wind BC DL=5.0 psf. Iw=1.00 GCpi(+/-)=0.18

Wind reactions based on MWFRS pressures.

See DWG VAL1300109 for valley details.

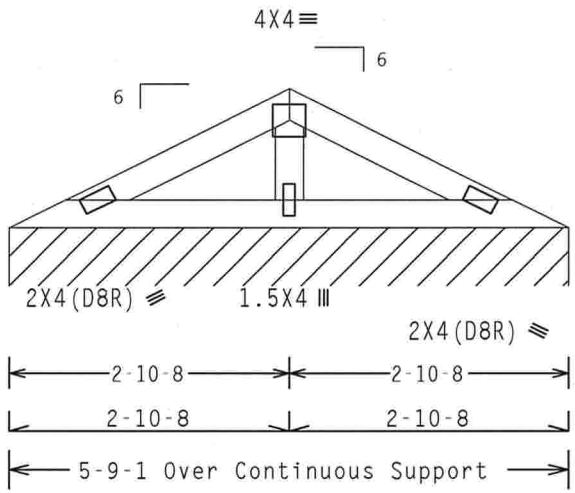

R=82 PLF U=4 PLF W=5-9-1
RL=4/-4 PLF

13-4-15

1-5-4

Design Crit: FBC2007Res/TPI-2002(STD)

PLT TYP. Wave FT/RT=20%(0%)/0(0) 8.07.00 [illegible] QTY:1 FL/-/4/-/-/R/- Scale =.5"/Ft.

ALPINE
ITW Building Components Group Inc.
Haines City, FL 33844
FL COA #0 278

WARNING TRUSSES REQUIRE EXTREME CARE IN FABRICATION, HANDLING, SHIPPING, INSTALLING AND BRACING. REFER TO BCSI (BUILDING COMPONENT SAFETY INFORMATION), PUBLISHED BY TPI (TRUSS PLATE INSTITUTE, 218 NORTH LEE STREET, SUITE 312, ALEXANDRIA, VA, 22314) AND WTCA (WOOD TRUSS COUNCIL OF AMERICA, 6300 ENTERPRISE LANE, MADISON, WI 53719) FOR SAFETY PRACTICES PRIOR TO PERFORMING THESE FUNCTIONS. UNLESS OTHERWISE INDICATED TOP CHORD SHALL HAVE PROPERLY ATTACHED STRUCTURAL PANELS AND BOTTOM CHORD SHALL HAVE A PROPERLY ATTACHED RIGID CEILING.

IMPORTANTFURNISH A COPY OF THIS DESIGN TO THE INSTALLATION CONTRACTOR. ITW BCG, INC. SHALL NOT BE RESPONSIBLE FOR ANY DEVIATION FROM THIS DESIGN; ANY FAILURE TO BUILD THE TRUSS IN COMFORMANCE WITH TPI; OR FABRICATING, HANDLING, SHIPPING, INSTALLING & BRACING OF TRUSSES.
DESIGN CONFORMS WITH APPLICABLE PROVISIONS OF NDS (NATIONAL DESIGN SPEC. BY AF&PA) AND TPI. ITW BCG CONNECTOR PLATES ARE MADE OF 20/18/16GA (W.H/SS/K) ASTM A653 GRADE 40/60 (W. K/H.SS) GALV. STEEL. APPLY PLATES TO EACH FACE OF TRUSS AND, UNLESS OTHERWISE LOCATED ON THIS DESIGN, POSITION PER DRAWINGS 160A-Z. ANY INSPECTION OF PLATES FOLLOWED BY (1) SHALL BE PER ANNEX A3 OF TPI1-2002 SEC.3. A SEAL ON THIS DRAWING INDICATES ACCEPTANCE OF PROFESSIONAL ENGINEERING RESPONSIBILITY SOLELY FOR THE TRUSS COMPONENT DESIGN SHOWN. THE SUITABILITY AND USE OF THIS COMPONENT FOR ANY BUILDING IS THE RESPONSIBILITY OF THE BUILDING DESIGNER PER ANSI/TPI 1 SEC. 2.

DOUGLAS FLEMING LICENSE No. 66648 STATE OF FLORIDA PROFESSIONAL ENGINEER
[illegible]03 '09

TC LL	20.0 PSF	REF	R8228- 81786
TC DL	10.0 PSF	DATE	03/02/09
BC DL	10.0 PSF	DRW	HCUSR8228 09061006
BC LL	0.0 PSF	HC-ENG	DF/DF *
TOT.LD.	40.0 PSF	SEQN-	6358
DUR.FAC.	1.25		
SPACING	24.0"	JREF-	1TPM8228Z03

(9-057--OWNER BUILDER Travis Williams-Fazzino -- , ** - H21B)

Top chord 2x4 SP #2 Dense
Bot chord 2x4 SP #2 Dense
Webs 2x4 SP #3

Roof overhang supports 2.00 psf soffit load.

(A) 2x4 #3 or better "T" brace. 80% length of web member. Attach with 16d Box or Gun (0.135"x3.5",min.)nails @ 6" OC.

In lieu of structural panels use purlins to brace all flat TC @ 24" OC.

Bottom chord checked for 10.00 psf non-concurrent live load.

Deflection meets L/240 live and L/180 total load.

110 mph wind, 15.00 ft mean hgt, ASCE 7-05, PART._ENC. bldg, not located within 4.50 ft from roof edge, CAT II, EXP B, wind TC DL=5.0 psf, wind BC DL=5.0 psf. Iw=1.00 GCpi(+/-)=0.55

Wind reactions based on MWFRS pressures.

Right end vertical not exposed to wind pressure.

(B) 2x6 #3 or better "T" brace. 80% length of web member. Attach with 16d Box or Gun (0.135"x3.5",min.)nails @ 6" OC.

Truss passed check for 20 psf additional bottom chord live load in areas with 42"-high x 24"-wide clearance.

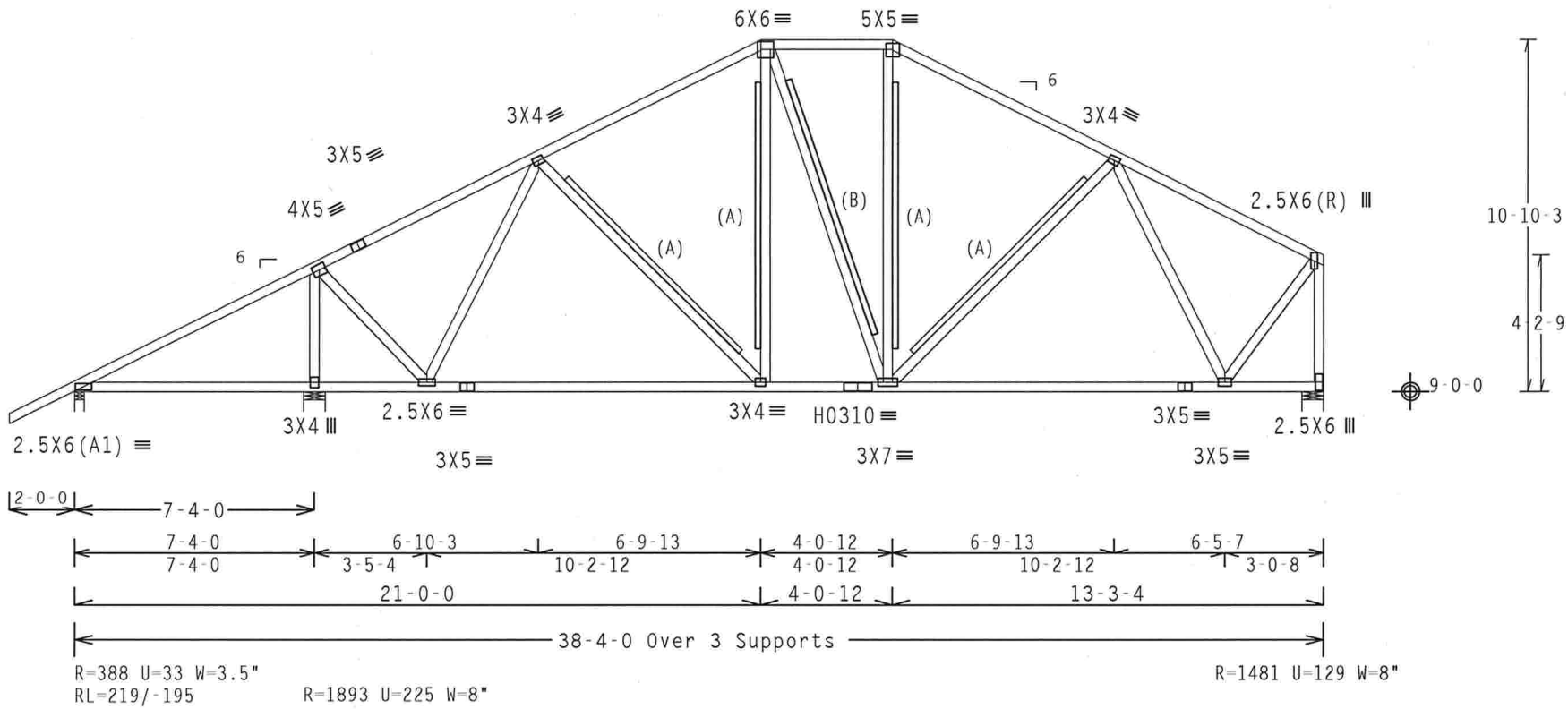

Design Crit: FBC2007Res/TPI-2002(STD)

PLT TYP. 20 Gauge HS,Wave FT/RT=20%(0%)/0(0) 8.07.00 QTY:1 FL/-/4/-/-/R/- Scale =.1875"/Ft.

ALPINE
ITW Building Components Group Inc.
Haines City, FL 33844
FL COA #0 278

WARNING TRUSSES REQUIRE EXTREME CARE IN FABRICATION, HANDLING, SHIPPING, INSTALLING AND BRACING. REFER TO BCSI (BUILDING COMPONENT SAFETY INFORMATION), PUBLISHED BY TPI (TRUSS PLATE INSTITUTE, 218 NORTH LEE STREET, SUITE 312, ALEXANDRIA, VA, 22314) AND WTCA (WOOD TRUSS COUNCIL OF AMERICA, 6300 ENTERPRISE LANE, MADISON, WI 53719) FOR SAFETY PRACTICES PRIOR TO PERFORMING THESE FUNCTIONS. UNLESS OTHERWISE INDICATED TOP CHORD SHALL HAVE PROPERLY ATTACHED STRUCTURAL PANELS AND BOTTOM CHORD SHALL HAVE A PROPERLY ATTACHED RIGID CEILING.

IMPORTANTFURNISH A COPY OF THIS DESIGN TO THE INSTALLATION CONTRACTOR. ITW BCG, INC. SHALL NOT BE RESPONSIBLE FOR ANY DEVIATION FROM THIS DESIGN; ANY FAILURE TO BUILD THE TRUSS IN COMFORMANCE WITH TPI; OR FABRICATING, HANDLING, SHIPPING, INSTALLING & BRACING OF TRUSSES. DESIGN CONFORMS WITH APPLICABLE PROVISIONS OF NDS (NATIONAL DESIGN SPEC. BY AF&PA) AND TPI. ITW BCG CONNECTOR PLATES ARE MADE OF 20/18/16GA (W,H/SS/K) ASTM A653 GRADE 40/60 (W, K/H,SS) GALV. STEEL. APPLY PLATES TO EACH FACE OF TRUSS AND, UNLESS OTHERWISE LOCATED ON THIS DESIGN, POSITION PER DRAWINGS 160A-Z. ANY INSPECTION OF PLATES FOLLOWED BY (1) SHALL BE PER ANNEX A3 OF TPI1-2002 SEC.3. A SEAL ON THIS DRAWING INDICATES ACCEPTANCE OF PROFESSIONAL ENGINEERING RESPONSIBILITY SOLELY FOR THE TRUSS COMPONENT DESIGN SHOWN. THE SUITABILITY AND USE OF THIS COMPONENT FOR ANY BUILDING IS THE RESPONSIBILITY OF THE BUILDING DESIGNER PER ANSI/TPI 1 SEC. 2.

DOUGLAS FLEMING LICENSE No. 66648 STATE OF FLORIDA PROFESSIONAL ENGINEER

TC LL	20.0 PSF	REF	R8228- 81787
TC DL	10.0 PSF	DATE	03/02/09
BC DL	10.0 PSF	DRW	HCUSR8228 09061020
BC LL	0.0 PSF	HC-ENG	DF/DF
TOT.LD.	40.0 PSF	SEQN-	6211
DUR.FAC.	1.25		
SPACING	24.0"	JREF-	1TPM8228Z03

(9-057--OWNER BUILDER Travis Williams-Fazzino -- , ** - H19B)

Top chord 2x4 SP #2 Dense
Bot chord 2x4 SP #2 Dense
Webs 2x4 SP #3

Roof overhang supports 2.00 psf soffit load.

(A) 1x4 #3SRB SPF-S or better "T" brace. 80% length of web member. Attach with 8d Box or Gun (0.113"x2.5",min.)nails @ 6" OC.

In lieu of structural panels use purlins to brace all flat TC @ 24" OC.

Deflection meets L/240 live and L/180 total load.

110 mph wind, 15.00 ft mean hgt, ASCE 7-05, CLOSED bldg, not located within 4.50 ft from roof edge, CAT II, EXP B, wind TC DL=5.0 psf, wind BC DL=5.0 psf. Iw=1.00 GCpi(+/-)=0.18

Wind reactions based on MWFRS pressures.

Right end vertical not exposed to wind pressure.

(B) 2x4 #3 or better "T" brace. 80% length of web member. Attach with 16d Box or Gun (0.135"x3.5",min.)nails @ 6" OC.

Bottom chord checked for 10.00 psf non-concurrent live load.

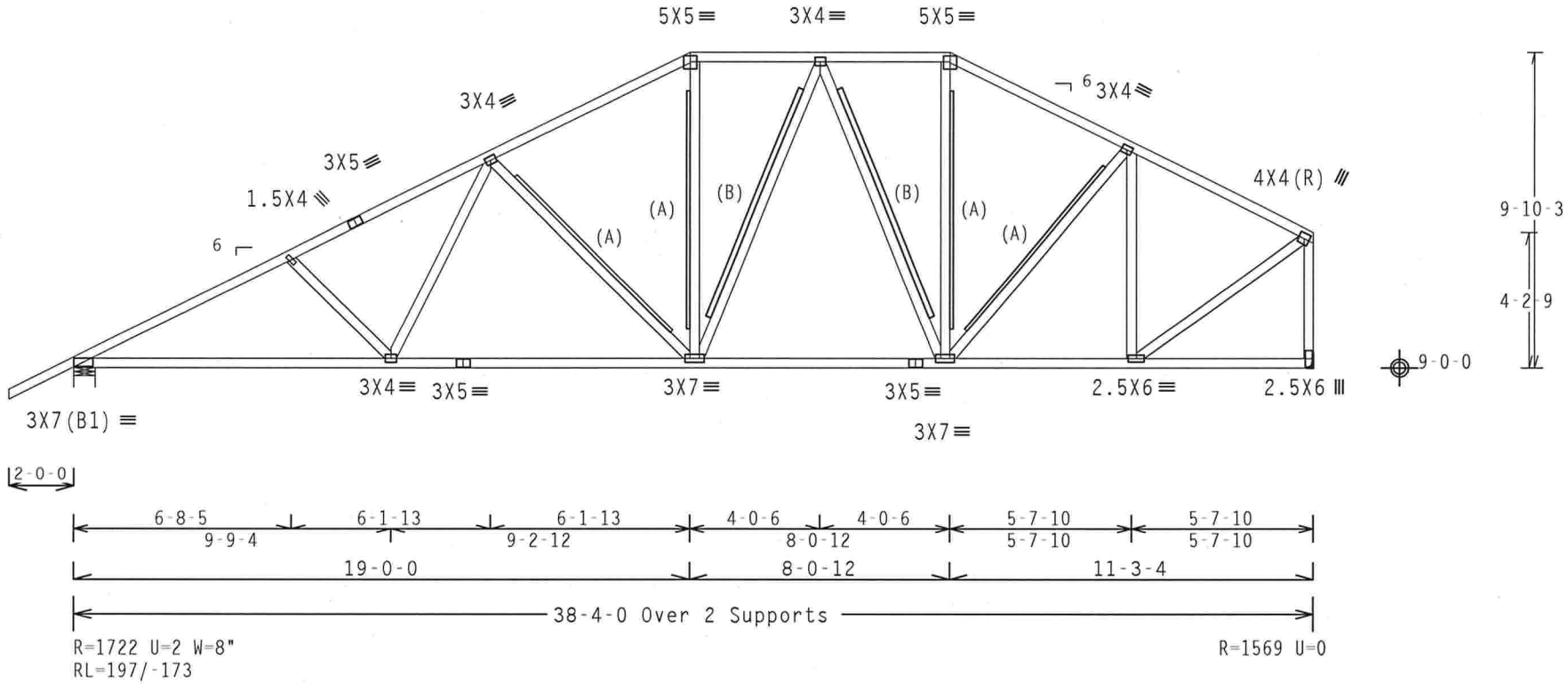

Design Crit: FBC2007Res/TPI-2002(STD)

PLT TYP. Wave | FT/RT=20%(0%)/0(0) | 8.07.00 | QTY:1 | FL/-/4/-/-/R/- | Scale =.1875"/Ft.

ALPINE
ITW Building Components Group Inc.
Haines City, FL 33844
FL COA #0 278

WARNING TRUSSES REQUIRE EXTREME CARE IN FABRICATION, HANDLING, SHIPPING, INSTALLING AND BRACING. REFER TO BCSI (BUILDING COMPONENT SAFETY INFORMATION), PUBLISHED BY TPI (TRUSS PLATE INSTITUTE, 218 NORTH LEE STREET, SUITE 312, ALEXANDRIA, VA, 22314) AND WTCA (WOOD TRUSS COUNCIL OF AMERICA, 6300 ENTERPRISE LANE, MADISON, WI 53719) FOR SAFETY PRACTICES PRIOR TO PERFORMING THESE FUNCTIONS. UNLESS OTHERWISE INDICATED TOP CHORD SHALL HAVE PROPERLY ATTACHED STRUCTURAL PANELS AND BOTTOM CHORD SHALL HAVE A PROPERLY ATTACHED RIGID CEILING.

IMPORTANTFURNISH A COPY OF THIS DESIGN TO THE INSTALLATION CONTRACTOR. ITW BCG, INC. SHALL NOT BE RESPONSIBLE FOR ANY DEVIATION FROM THIS DESIGN; ANY FAILURE TO BUILD THE TRUSS IN COMFORMANCE WITH TPI; OR FABRICATING, HANDLING, SHIPPING, INSTALLING & BRACING OF TRUSSES. DESIGN CONFORMS WITH APPLICABLE PROVISIONS OF NDS (NATIONAL DESIGN SPEC. BY AF&PA) AND TPI. ITW BCG CONNECTOR PLATES ARE MADE OF 20/18/16GA (W,H/SS/K) ASTM A653 GRADE 40/60 (W, K/H,SS) GALV. STEEL. APPLY PLATES TO EACH FACE OF TRUSS AND, UNLESS OTHERWISE LOCATED ON THIS DESIGN, POSITION PER DRAWINGS 160A-Z. ANY INSPECTION OF PLATES FOLLOWED BY (1) SHALL BE PER ANNEX A3 OF TPI1-2002 SEC.3. A SEAL ON THIS DRAWING INDICATES ACCEPTANCE OF PROFESSIONAL ENGINEERING RESPONSIBILITY SOLELY FOR THE TRUSS COMPONENT DESIGN SHOWN. THE SUITABILITY AND USE OF THIS COMPONENT FOR ANY BUILDING IS THE RESPONSIBILITY OF THE BUILDING DESIGNER PER ANSI/TPI 1 SEC. 2.

DOUGLAS FLEMING LICENSE No. 66648 STATE OF FLORIDA PROFESSIONAL ENGINEER

TC LL	20.0 PSF	REF R8228- 81788
TC DL	10.0 PSF	DATE 03/02/09
BC DL	10.0 PSF	DRW HCUSR8228 09061021
BC LL	0.0 PSF	HC-ENG DF/DF
TOT.LD.	40.0 PSF	SEQN- 6292
DUR.FAC.	1.25	
SPACING	24.0"	JREF- 1TPM8228Z03

(9-057--OWNER BUILDER Travis Williams-Fazzino -- , ** - H17B)

Top chord 2x4 SP #2 Dense
Bot chord 2x4 SP #2 Dense
Webs 2x4 SP #3

Roof overhang supports 2.00 psf soffit load.

(A) 1x4 #3SRB SPF-S or better "T" brace. 80% length of web member. Attach with 8d Box or Gun (0.113"x2.5",min.)nails @ 6" OC.

In lieu of structural panels use purlins to brace all flat TC @ 24" OC.

Deflection meets L/240 live and L/180 total load.

110 mph wind, 15.00 ft mean hgt, ASCE 7-05, CLOSED bldg, not located within 4.50 ft from roof edge, CAT II, EXP B, wind TC DL=5.0 psf, wind BC DL=5.0 psf. Iw=1.00 GCpi(+/-)=0.18

Wind reactions based on MWFRS pressures.

Right end vertical not exposed to wind pressure.

(B) 2x4 #3 or better "T" brace. 80% length of web member. Attach with 16d Box or Gun (0.135"x3.5",min.)nails @ 6" OC.

Bottom chord checked for 10.00 psf non-concurrent live load.

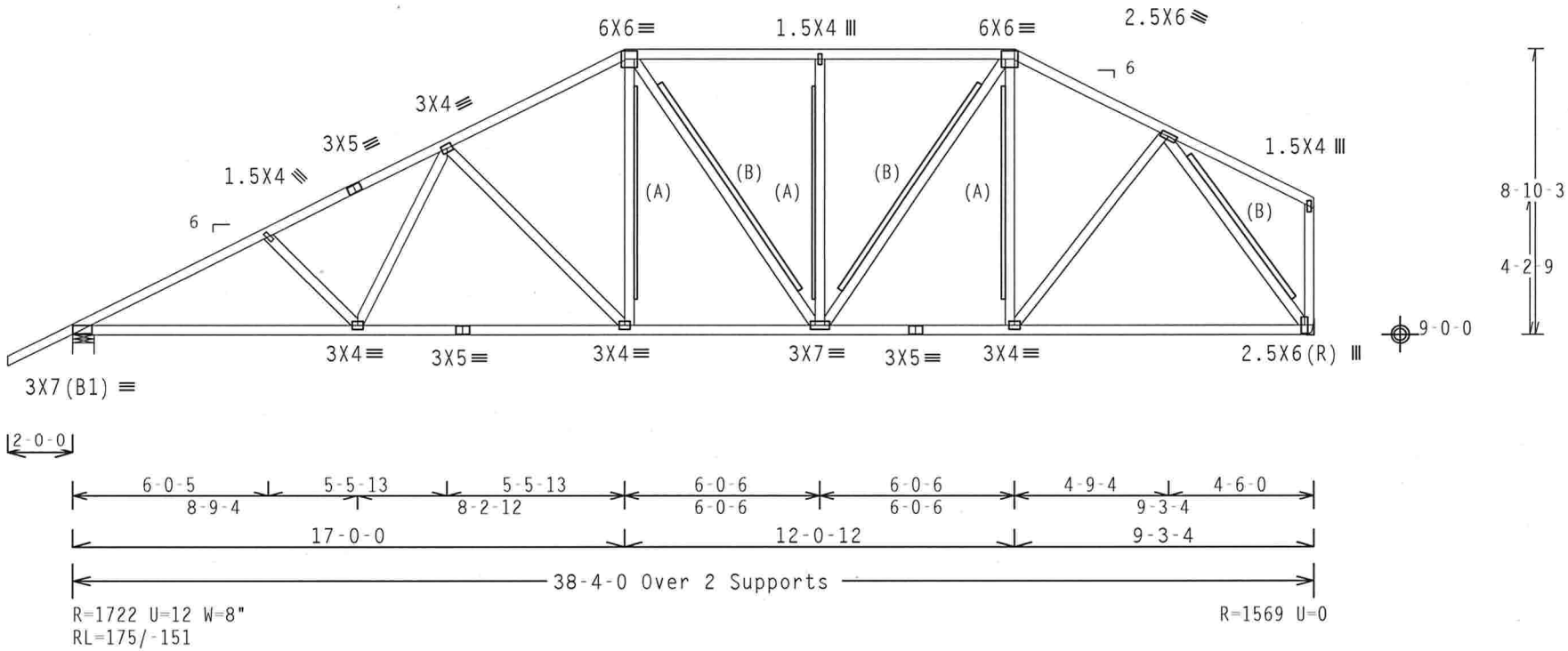

Design Crit: FBC2007Res/TPI-2002(STD)

PLT TYP. Wave | FT/RT=20%(0%)/0(0) | 8.07.00 | QTY:1 | FL/-/4/-/-/R/- | Scale =.1875"/Ft.

ALPINE
ITW Building Components Group Inc.
Haines City, FL 33844
FL COA #0 278

WARNING TRUSSES REQUIRE EXTREME CARE IN FABRICATION, HANDLING, SHIPPING, INSTALLING AND BRACING. REFER TO BCSI (BUILDING COMPONENT SAFETY INFORMATION), PUBLISHED BY TPI (TRUSS PLATE INSTITUTE, 218 NORTH LEE STREET, SUITE 312, ALEXANDRIA, VA, 22314) AND WTCA (WOOD TRUSS COUNCIL OF AMERICA, 6300 ENTERPRISE LANE, MADISON, WI 53719) FOR SAFETY PRACTICES PRIOR TO PERFORMING THESE FUNCTIONS. UNLESS OTHERWISE INDICATED TOP CHORD SHALL HAVE PROPERLY ATTACHED STRUCTURAL PANELS AND BOTTOM CHORD SHALL HAVE A PROPERLY ATTACHED RIGID CEILING.

IMPORTANTFURNISH A COPY OF THIS DESIGN TO THE INSTALLATION CONTRACTOR. ITW BCG, INC. SHALL NOT BE RESPONSIBLE FOR ANY DEVIATION FROM THIS DESIGN; ANY FAILURE TO BUILD THE TRUSS IN COMFORMANCE WITH TPI; OR FABRICATING, HANDLING, SHIPPING, INSTALLING & BRACING OF TRUSSES.
DESIGN CONFORMS WITH APPLICABLE PROVISIONS OF NDS (NATIONAL DESIGN SPEC. BY AF&PA) AND TPI. ITW BCG CONNECTOR PLATES ARE MADE OF 20/18/16GA (W.H/SS/K) ASTM A653 GRADE 40/60 (W. K/H.SS) GALV. STEEL. APPLY PLATES TO EACH FACE OF TRUSS AND, UNLESS OTHERWISE LOCATED ON THIS DESIGN, POSITION PER DRAWINGS 160A-Z. ANY INSPECTION OF PLATES FOLLOWED BY (1) SHALL BE PER ANNEX A3 OF TPI1-2002 SEC.3. A SEAL ON THIS DRAWING INDICATES ACCEPTANCE OF PROFESSIONAL ENGINEERING RESPONSIBILITY SOLELY FOR THE TRUSS COMPONENT DESIGN SHOWN. THE SUITABILITY AND USE OF THIS COMPONENT FOR ANY BUILDING IS THE RESPONSIBILITY OF THE BUILDING DESIGNER PER ANSI/TPI 1 SEC. 2.

DOUGLAS FLEMING LICENSE No. 66648 STATE OF FLORIDA PROFESSIONAL ENGINEER

TC LL	20.0 PSF	REF R8228- 81789
TC DL	10.0 PSF	DATE 03/02/09
BC DL	10.0 PSF	DRW HCUSR8228 09061022
BC LL	0.0 PSF	HC-ENG DF/DF
TOT.LD.	40.0 PSF	SEQN- 6280
DUR.FAC.	1.25	
SPACING	24.0"	JREF- 1TPM8228Z03

Top chord 2x4 SP #2 Dense
Bot chord 2x4 SP #2 Dense
Webs 2x4 SP #3

Roof overhang supports 2.00 psf soffit load.

(A) 1x4 #3SRB SPF-S or better "T" brace. 80% length of web member. Attach with 8d Box or Gun (0.113"x2.5",min.)nails @ 6" OC.

In lieu of structural panels use purlins to brace all flat TC @ 24" OC.

Deflection meets L/240 live and L/180 total load.

110 mph wind, 15.00 ft mean hgt, ASCE 7-05, CLOSED bldg, not located within 4.50 ft from roof edge, CAT II, EXP B, wind TC DL=5.0 psf, wind BC DL=5.0 psf. Iw=1.00 GCpi(+/-)=0.18

Wind reactions based on MWFRS pressures.

Right end vertical not exposed to wind pressure.

(B) 2x6 #3 or better "T" brace. 80% length of web member. Attach with 16d Box or Gun (0.135"x3.5",min.)nails @ 6" OC.

Bottom chord checked for 10.00 psf non-concurrent live load.

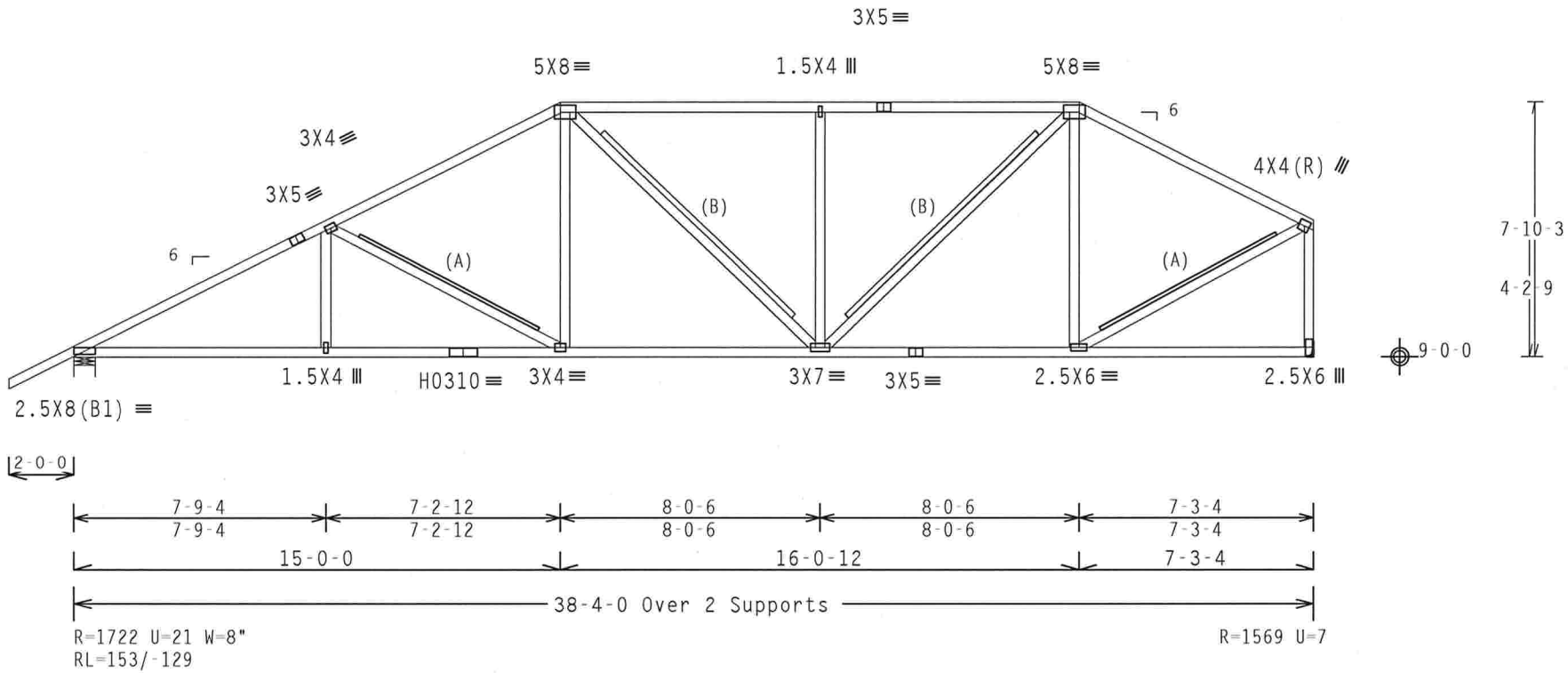

Design Crit: FBC2007Res/TPI-2002(STD)

PLT TYP. 20 Gauge HS,Wave FT/RT=20%(0%)/0(0) 8.07.0 QTY:1 FL/-/4/-/-/R/- Scale =.1875"/Ft.

WARNING TRUSSES REQUIRE EXTREME CARE IN FABRICATION, HANDLING, SHIPPING, INSTALLING AND BRACING. REFER TO BCSI (BUILDING COMPONENT SAFETY INFORMATION), PUBLISHED BY TPI (TRUSS PLATE INSTITUTE, 218 NORTH LEE STREET, SUITE 312, ALEXANDRIA, VA, 22314) AND WTCA (WOOD TRUSS COUNCIL OF AMERICA, 6300 ENTERPRISE LANE, MADISON, WI 53719) FOR SAFETY PRACTICES PRIOR TO PERFORMING THESE FUNCTIONS. UNLESS OTHERWISE INDICATED TOP CHORD SHALL HAVE PROPERLY ATTACHED STRUCTURAL PANELS AND BOTTOM CHORD SHALL HAVE A PROPERLY ATTACHED RIGID CEILING.

IMPORTANTFURNISH A COPY OF THIS DESIGN TO THE INSTALLATION CONTRACTOR. ITW BCG, INC. SHALL NOT BE RESPONSIBLE FOR ANY DEVIATION FROM THIS DESIGN; ANY FAILURE TO BUILD THE TRUSS IN COMFORMANCE WITH TPI; OR FABRICATING, HANDLING, SHIPPING, INSTALLING & BRACING OF TRUSSES.
DESIGN CONFORMS WITH APPLICABLE PROVISIONS OF NDS (NATIONAL DESIGN SPEC. BY AF&PA) AND TPI. ITW BCG CONNECTOR PLATES ARE MADE OF 20/18/16GA (W,H/SS/K) ASTM A653 GRADE 40/60 (W, K/H,SS) GALV. STEEL. APPLY PLATES TO EACH FACE OF TRUSS AND, UNLESS OTHERWISE LOCATED ON THIS DESIGN, POSITION PER DRAWINGS 160A-Z. ANY INSPECTION OF PLATES FOLLOWED BY (1) SHALL BE PER ANNEX A3 OF TPI1-2002 SEC.3. A SEAL ON THIS DRAWING INDICATES ACCEPTANCE OF PROFESSIONAL ENGINEERING RESPONSIBILITY SOLELY FOR THE TRUSS COMPONENT DESIGN SHOWN. THE SUITABILITY AND USE OF THIS COMPONENT FOR ANY BUILDING IS THE RESPONSIBILITY OF THE BUILDING DESIGNER PER ANSI/TPI 1 SEC. 2.

ALPINE
ITW Building Components Group Inc.
Haines City, FL 33844
FL COA #0 278

DOUGLAS FLEMING LICENSE No. 66648 STATE OF FLORIDA PROFESSIONAL ENGINEER

TC LL	20.0 PSF	REF	R8228- 81790
TC DL	10.0 PSF	DATE	03/02/09
BC DL	10.0 PSF	DRW	HCUSR8228 09061023
BC LL	0.0 PSF	HC-ENG	DF/DF
TOT.LD.	40.0 PSF	SEQN-	6268
DUR.FAC.	1.25		
SPACING	24.0"	JREF-	1TPM8228Z03

(9-057--OWNER BUILDER Travis Williams-Fazzino -- , ** - H13B)

Top chord 2x4 SP #2 Dense
Bot chord 2x4 SP #2 Dense
Webs 2x4 SP #3

Roof overhang supports 2.00 psf soffit load.

(A) 1x4 #3SRB SPF-S or better "T" brace. 80% length of web member. Attach with 8d Box or Gun (0.113"x2.5",min.)nails @ 6" OC.

Bottom chord checked for 10.00 psf non-concurrent live load.

Deflection meets L/240 live and L/180 total load.

110 mph wind, 15.00 ft mean hgt, ASCE 7-05, CLOSED bldg, not located within 4.50 ft from roof edge, CAT II, EXP B, wind TC DL=5.0 psf, wind BC DL=5.0 psf. Iw=1.00 GCpi(+/-)=0.18

Wind reactions based on MWFRS pressures.

Right end vertical not exposed to wind pressure.

In lieu of structural panels use purlins to brace all flat TC @ 24" OC.

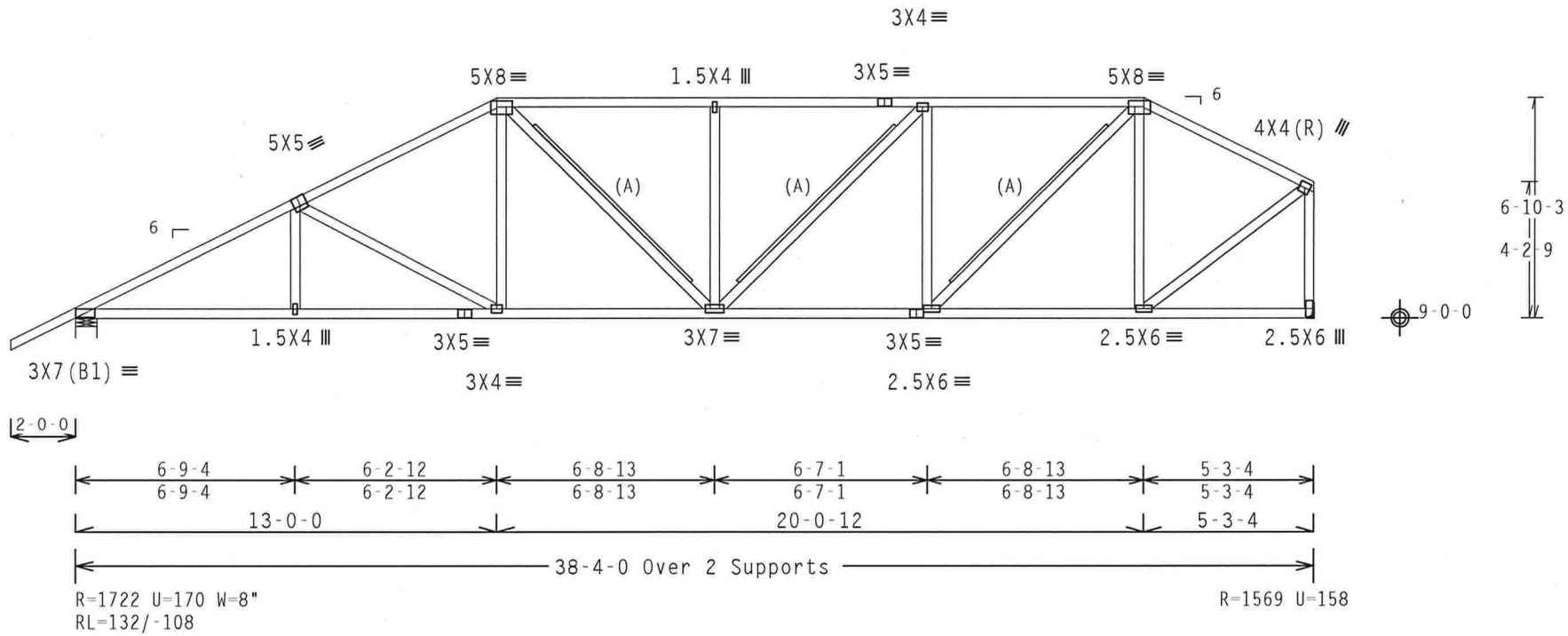

Design Crit: FBC2007Res/TPI-2002(STD)

PLT TYP. Wave | FT/RT=20%(0%)/0(0) | 8.07.00 | QTY:1 | FL/-/4/-/-/R/- | Scale =.1875"/Ft.

ALPINE
ITW Building Components Group Inc.
Haines City, FL 33844
FL COA #0 278

WARNING TRUSSES REQUIRE EXTREME CARE IN FABRICATION, HANDLING, SHIPPING, INSTALLING AND BRACING. REFER TO BCSI (BUILDING COMPONENT SAFETY INFORMATION), PUBLISHED BY TPI (TRUSS PLATE INSTITUTE, 218 NORTH LEE STREET, SUITE 312, ALEXANDRIA, VA, 22314) AND WTCA (WOOD TRUSS COUNCIL OF AMERICA, 6300 ENTERPRISE LANE, MADISON, WI 53719) FOR SAFETY PRACTICES PRIOR TO PERFORMING THESE FUNCTIONS. UNLESS OTHERWISE INDICATED TOP CHORD SHALL HAVE PROPERLY ATTACHED STRUCTURAL PANELS AND BOTTOM CHORD SHALL HAVE A PROPERLY ATTACHED RIGID CEILING.

IMPORTANT FURNISH A COPY OF THIS DESIGN TO THE INSTALLATION CONTRACTOR. ITW BCG, INC. SHALL NOT BE RESPONSIBLE FOR ANY DEVIATION FROM THIS DESIGN; ANY FAILURE TO BUILD THE TRUSS IN COMFORMANCE WITH TPI; OR FABRICATING, HANDLING, SHIPPING, INSTALLING & BRACING OF TRUSSES. DESIGN CONFORMS WITH APPLICABLE PROVISIONS OF NDS (NATIONAL DESIGN SPEC. BY AF&PA) AND TPI. ITW BCG CONNECTOR PLATES ARE MADE OF 20/18/16GA (W,H/SS/K) ASTM A653 GRADE 40/60 (W, K/H,SS) GALV. STEEL. APPLY PLATES TO EACH FACE OF TRUSS AND, UNLESS OTHERWISE LOCATED ON THIS DESIGN, POSITION PER DRAWINGS 160A-Z. ANY INSPECTION OF PLATES FOLLOWED BY (1) SHALL BE PER ANNEX A3 OF TPI1-2002 SEC.3. A SEAL ON THIS DRAWING INDICATES ACCEPTANCE OF PROFESSIONAL ENGINEERING RESPONSIBILITY SOLELY FOR THE TRUSS COMPONENT DESIGN SHOWN. THE SUITABILITY AND USE OF THIS COMPONENT FOR ANY BUILDING IS THE RESPONSIBILITY OF THE BUILDING DESIGNER PER ANSI/TPI 1 SEC. 2.

DOUGLAS FLEMING LICENSE No. 66648 STATE OF FLORIDA PROFESSIONAL ENGINEER

03 '09

TC LL	20.0 PSF	REF R8228- 81791
TC DL	10.0 PSF	DATE 03/02/09
BC DL	10.0 PSF	DRW HCUSR8228 09061024
BC LL	0.0 PSF	HC-ENG DF/DF
TOT.LD.	40.0 PSF	SEQN- 6258
DUR.FAC.	1.25	
SPACING	24.0"	JREF- 1TPM8228Z03

(9-057--OWNER BUILDER Travis Williams-Fazzino -- , ** - H11B)

Top chord 2x4 SP #2 Dense
Bot chord 2x4 SP #2 Dense
Webs 2x4 SP #3

Roof overhang supports 2.00 psf soffit load.

In lieu of structural panels use purlins to brace all flat TC @ 24" OC.

Deflection meets L/240 live and L/180 total load.

110 mph wind, 15.00 ft mean hgt, ASCE 7-05, CLOSED bldg, not located within 4.50 ft from roof edge, CAT II, EXP B, wind TC DL=5.0 psf, wind BC DL=5.0 psf. Iw=1.00 GCpi(+/-)=0.18

Wind reactions based on MWFRS pressures.

Right end vertical not exposed to wind pressure.

Bottom chord checked for 10.00 psf non-concurrent live load.

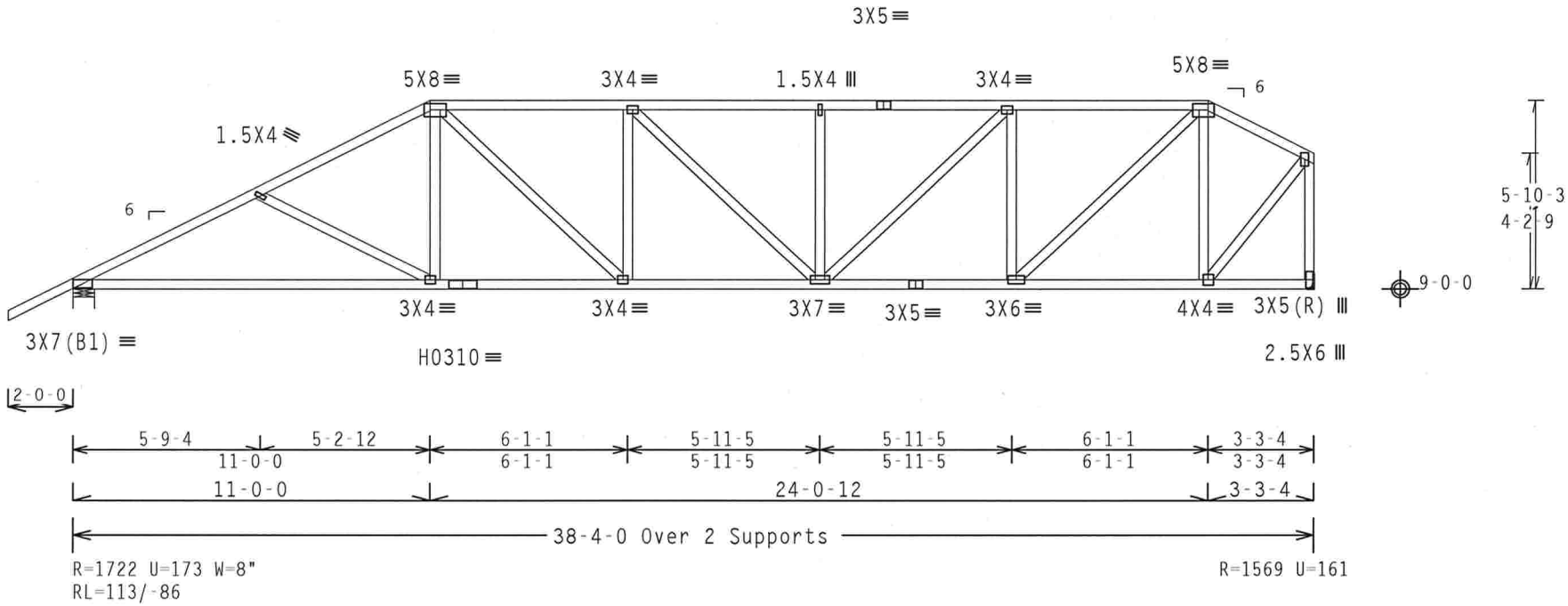

Design Crit: FBC2007Res/TPI-2002(STD)

PLT TYP. 20 Gauge HS,Wave FT/RT=20%(0%)/0(0) 8.07.00 [illegible] QTY:1 FL/-/4/-/-/R/- Scale =.1875"/Ft.

ALPINE
ITW Building Components Group Inc.
Haines City, FL 33844
FL COA #0 278

WARNING TRUSSES REQUIRE EXTREME CARE IN FABRICATION, HANDLING, SHIPPING, INSTALLING AND BRACING. REFER TO BCSI (BUILDING COMPONENT SAFETY INFORMATION), PUBLISHED BY TPI (TRUSS PLATE INSTITUTE, 218 NORTH LEE STREET, SUITE 312, ALEXANDRIA, VA, 22314) AND WTCA (WOOD TRUSS COUNCIL OF AMERICA, 6300 ENTERPRISE LANE, MADISON, WI 53719) FOR SAFETY PRACTICES PRIOR TO PERFORMING THESE FUNCTIONS. UNLESS OTHERWISE INDICATED TOP CHORD SHALL HAVE PROPERLY ATTACHED STRUCTURAL PANELS AND BOTTOM CHORD SHALL HAVE A PROPERLY ATTACHED RIGID CEILING.

IMPORTANTFURNISH A COPY OF THIS DESIGN TO THE INSTALLATION CONTRACTOR. ITW BCG, INC. SHALL NOT BE RESPONSIBLE FOR ANY DEVIATION FROM THIS DESIGN; ANY FAILURE TO BUILD THE TRUSS IN COMFORMANCE WITH TPI; OR FABRICATING, HANDLING, SHIPPING, INSTALLING & BRACING OF TRUSSES. DESIGN CONFORMS WITH APPLICABLE PROVISIONS OF NDS (NATIONAL DESIGN SPEC. BY AF&PA) AND TPI. ITW BCG CONNECTOR PLATES ARE MADE OF 20/18/16GA (W,H/SS/K) ASTM A653 GRADE 40/60 (W, K/H,SS) GALV. STEEL. APPLY PLATES TO EACH FACE OF TRUSS AND, UNLESS OTHERWISE LOCATED ON THIS DESIGN, POSITION PER DRAWINGS 160A-Z. ANY INSPECTION OF PLATES FOLLOWED BY (1) SHALL BE PER ANNEX A3 OF TPI1-2002 SEC.3. A SEAL ON THIS DRAWING INDICATES ACCEPTANCE OF PROFESSIONAL ENGINEERING RESPONSIBILITY SOLELY FOR THE TRUSS COMPONENT DESIGN SHOWN. THE SUITABILITY AND USE OF THIS COMPONENT FOR ANY BUILDING IS THE RESPONSIBILITY OF THE BUILDING DESIGNER PER ANSI/TPI 1 SEC. 2.

DOUGLAS FLEMING LICENSE No. 66648 STATE OF FLORIDA PROFESSIONAL ENGINEER
[illegible] 03 '09

TC LL	20.0 PSF	REF	R8228- 81792
TC DL	10.0 PSF	DATE	03/02/09
BC DL	10.0 PSF	DRW	HCUSR8228 09061025
BC LL	0.0 PSF	HC-ENG	DF/DF
TOT.LD.	40.0 PSF	SEQN-	6250
DUR.FAC.	1.25		
SPACING	24.0"	JREF-	1TPM8228Z03

(9-057--OWNER BUILDER Travis Williams-Fazzino -- , ** - H9B)

Top chord 2x4 SP #2 Dense
Bot chord 2x4 SP #2 Dense
Webs 2x4 SP #3

Roof overhang supports 2.00 psf soffit load.

(A) 1x4 #3SRB SPF-S or better "T" brace. 80% length of web member. Attach with 8d Box or Gun (0.113"x2.5",min.)nails @ 6" OC.

Bottom chord checked for 10.00 psf non-concurrent live load.

Deflection meets L/240 live and L/180 total load.

110 mph wind, 15.00 ft mean hgt, ASCE 7-05, CLOSED bldg, not located within 4.50 ft from roof edge, CAT II, EXP B, wind TC DL=5.0 psf, wind BC DL=5.0 psf. Iw=1.00 GCpi(+/-)=0.18

Wind reactions based on MWFRS pressures.

Right end vertical not exposed to wind pressure.

In lieu of structural panels use purlins to brace all flat TC @ 24" OC.

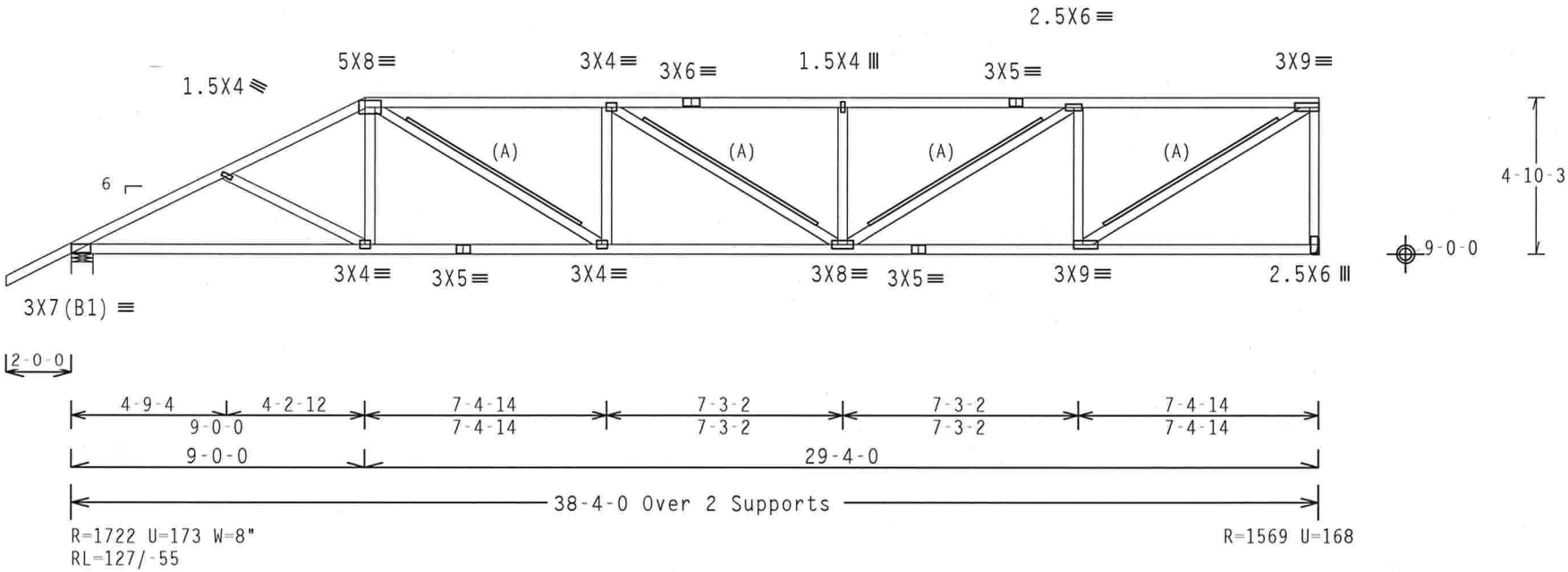

Design Crit: FBC2007Res/TPI-2002(STD)

PLT TYP. Wave | FT/RT=20%(0%)/0(0) | 8.07.00 | QTY:1 | FL/-/4/-/-/R/- | Scale =.1875"/Ft.

ALPINE
ITW Building Components Group Inc.
Haines City, FL 33844
FL COA #0278

WARNING TRUSSES REQUIRE EXTREME CARE IN FABRICATION, HANDLING, SHIPPING, INSTALLING AND BRACING. REFER TO BCSI (BUILDING COMPONENT SAFETY INFORMATION), PUBLISHED BY TPI (TRUSS PLATE INSTITUTE, 218 NORTH LEE STREET, SUITE 312, ALEXANDRIA, VA. 22314) AND WTCA (WOOD TRUSS COUNCIL OF AMERICA, 6300 ENTERPRISE LANE, MADISON, WI 53719) FOR SAFETY PRACTICES PRIOR TO PERFORMING THESE FUNCTIONS. UNLESS OTHERWISE INDICATED TOP CHORD SHALL HAVE PROPERLY ATTACHED STRUCTURAL PANELS AND BOTTOM CHORD SHALL HAVE A PROPERLY ATTACHED RIGID CEILING.

IMPORTANTFURNISH A COPY OF THIS DESIGN TO THE INSTALLATION CONTRACTOR. ITW BCG, INC. SHALL NOT BE RESPONSIBLE FOR ANY DEVIATION FROM THIS DESIGN; ANY FAILURE TO BUILD THE TRUSS IN COMFORMANCE WITH TPI; OR FABRICATING, HANDLING, SHIPPING, INSTALLING & BRACING OF TRUSSES.
DESIGN CONFORMS WITH APPLICABLE PROVISIONS OF NDS (NATIONAL DESIGN SPEC. BY AF&PA) AND TPI. ITW BCG CONNECTOR PLATES ARE MADE OF 20/18/16GA (W,H/SS/K) ASTM A653 GRADE 40/60 (W, K/H,SS) GALV. STEEL. APPLY PLATES TO EACH FACE OF TRUSS AND, UNLESS OTHERWISE LOCATED ON THIS DESIGN, POSITION PER DRAWINGS 160A-Z. ANY INSPECTION OF PLATES FOLLOWED BY (i) SHALL BE PER ANNEX A3 OF TPI1-2002 SEC.3. A SEAL ON THIS DRAWING INDICATES ACCEPTANCE OF PROFESSIONAL ENGINEERING RESPONSIBILITY SOLELY FOR THE TRUSS COMPONENT DESIGN SHOWN. THE SUITABILITY AND USE OF THIS COMPONENT FOR ANY BUILDING IS THE RESPONSIBILITY OF THE BUILDING DESIGNER PER ANSI/TPI 1 SEC. 2.

DOUGLAS FLEMING LICENSE No. 66648 STATE OF FLORIDA PROFESSIONAL ENGINEER
03 '09

TC LL	20.0 PSF	REF R8228- 81793
TC DL	10.0 PSF	DATE 03/02/09
BC DL	10.0 PSF	DRW HCUSR8228 09061026
BC LL	0.0 PSF	HC-ENG DF/DF
TOT.LD.	40.0 PSF	SEQN- 6241
DUR.FAC.	1.25	
SPACING	24.0"	JREF- 1TPM8228Z03

(9-057--OWNER BUILDER Travis Williams-Fazzino -- , ** - H7B)

Top chord 2x6 SP #1 Dense :T1 2x4 SP #2 Dense:
:T4 2x6 SP #2:
Bot chord 2x6 SP #1 Dense :B1 2x6 SP #2:
Webs 2x4 SP #3 :W2, W8, W10 2x4 SP #2 Dense:

Roof overhang supports 2.00 psf soffit load.

In lieu of structural panels use purlins to brace all flat TC @ 24" OC.

Left side jacks have 7-0-0 setback with 0-0-0 cant and 2-0-0 overhang. End jacks have 7-0-0 setback with 0-0-0 cant and 2-0-0 overhang. Right side jacks have 0-0-0 setback with 0-0-0 cant and 0-0-0 overhang.

110 mph wind, 15.00 ft mean hgt, ASCE 7-05, CLOSED bldg, Located anywhere in roof, CAT II, EXP B, wind TC DL=5.0 psf, wind BC DL=5.0 psf. Iw=1.00 GCpi(+/-)=0.18

Wind reactions based on MWFRS pressures.

Right end vertical not exposed to wind pressure.

#1 hip supports 7-0-0 jacks with no webs.

Deflection meets L/240 live and L/180 total load.

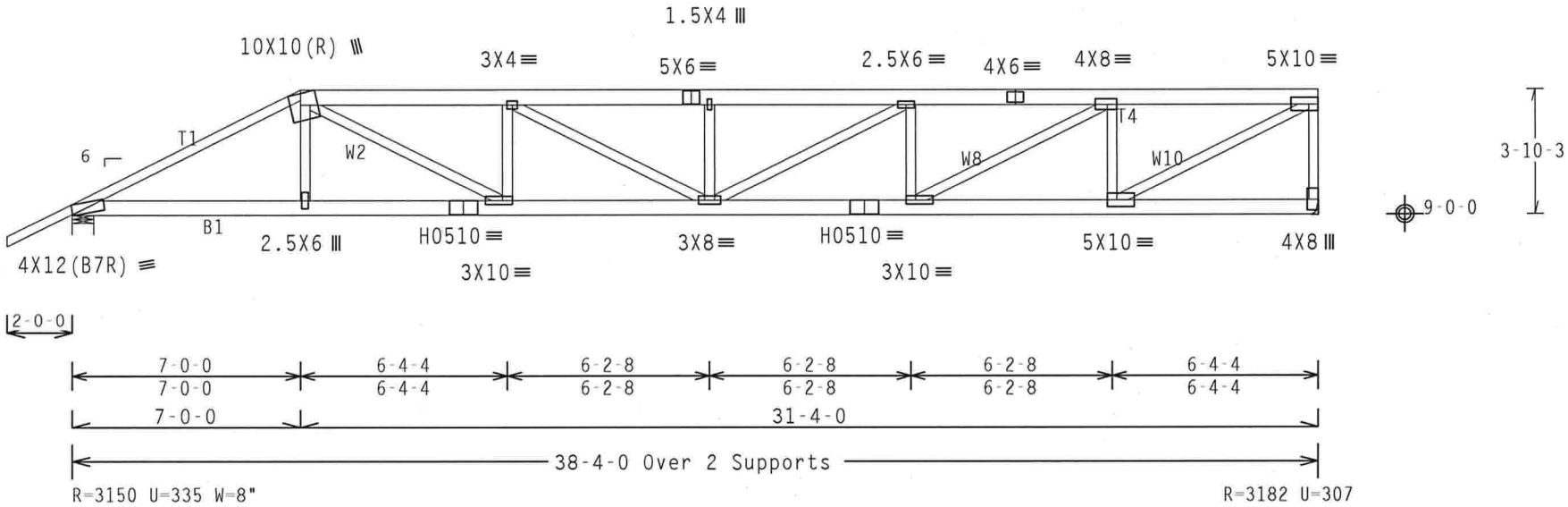

Design Crit: FBC2007Res/TPI-2002(STD)

PLT TYP. 20 Gauge HS,Wave FT/RT=20%(0%)/0(0) 8.07.00 [illegible] QTY:1 FL/-/4/-/-/R/- Scale =.1875"/Ft.

ALPINE
ITW Building Components Group Inc.
Haines City, FL 33844
FL COA #0 278

WARNING TRUSSES REQUIRE EXTREME CARE IN FABRICATION, HANDLING, SHIPPING, INSTALLING AND BRACING. REFER TO BCSI (BUILDING COMPONENT SAFETY INFORMATION), PUBLISHED BY TPI (TRUSS PLATE INSTITUTE, 218 NORTH LEE STREET, SUITE 312, ALEXANDRIA, VA. 22314) AND WTCA (WOOD TRUSS COUNCIL OF AMERICA, 6300 ENTERPRISE LANE, MADISON, WI 53719) FOR SAFETY PRACTICES PRIOR TO PERFORMING THESE FUNCTIONS. UNLESS OTHERWISE INDICATED TOP CHORD SHALL HAVE PROPERLY ATTACHED STRUCTURAL PANELS AND BOTTOM CHORD SHALL HAVE A PROPERLY ATTACHED RIGID CEILING.

IMPORTANTFURNISH A COPY OF THIS DESIGN TO THE INSTALLATION CONTRACTOR. ITW BCG, INC. SHALL NOT BE RESPONSIBLE FOR ANY DEVIATION FROM THIS DESIGN; ANY FAILURE TO BUILD THE TRUSS IN COMFORMANCE WITH TPI; OR FABRICATING, HANDLING, SHIPPING, INSTALLING & BRACING OF TRUSSES.
DESIGN CONFORMS WITH APPLICABLE PROVISIONS OF NDS (NATIONAL DESIGN SPEC, BY AF&PA) AND TPI. ITW BCG CONNECTOR PLATES ARE MADE OF 20/18/16GA (W,H/SS/K) ASTM A653 GRADE 40/60 (W, K/H,SS) GALV. STEEL. APPLY PLATES TO EACH FACE OF TRUSS AND, UNLESS OTHERWISE LOCATED ON THIS DESIGN, POSITION PER DRAWINGS 160A-Z. ANY INSPECTION OF PLATES FOLLOWED BY (1) SHALL BE PER ANNEX A3 OF TPI1-2002 SEC.3. A SEAL ON THIS DRAWING INDICATES ACCEPTANCE OF PROFESSIONAL ENGINEERING RESPONSIBILITY SOLELY FOR THE TRUSS COMPONENT DESIGN SHOWN. THE SUITABILITY AND USE OF THIS COMPONENT FOR ANY BUILDING IS THE RESPONSIBILITY OF THE BUILDING DESIGNER PER ANSI/TPI 1 SEC. 2.

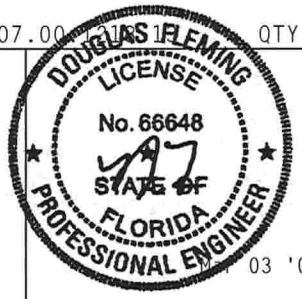

TC LL	20.0 PSF	REF	R8228- 81794
TC DL	10.0 PSF	DATE	03/02/09
BC DL	10.0 PSF	DRW	HCUSR8228 09061027
BC LL	0.0 PSF	HC-ENG	DF/DF
TOT.LD.	40.0 PSF	SEQN-	6231
DUR.FAC.	1.25		
SPACING	SEE ABOVE	JREF-	1TPM8228Z03

[illegible] 03 '09

(9-057--OWNER BUILDER Travis Williams-Fazzino -- , ** - C2)

Top chord 2x4 SP #2 Dense
Bot chord 2x4 SP #2 Dense
Webs 2x4 SP #3

Roof overhang supports 2.00 psf soffit load.

Bottom chord checked for 10.00 psf non-concurrent live load.

110 mph wind, 15.00 ft mean hgt, ASCE 7-05, CLOSED bldg, not located within 4.50 ft from roof edge, CAT II, EXP B, wind TC DL=5.0 psf, wind BC DL=5.0 psf. Iw=1.00 GCpi(+/-)=0.18

Wind reactions based on MWFRS pressures.

Deflection meets L/240 live and L/180 total load.

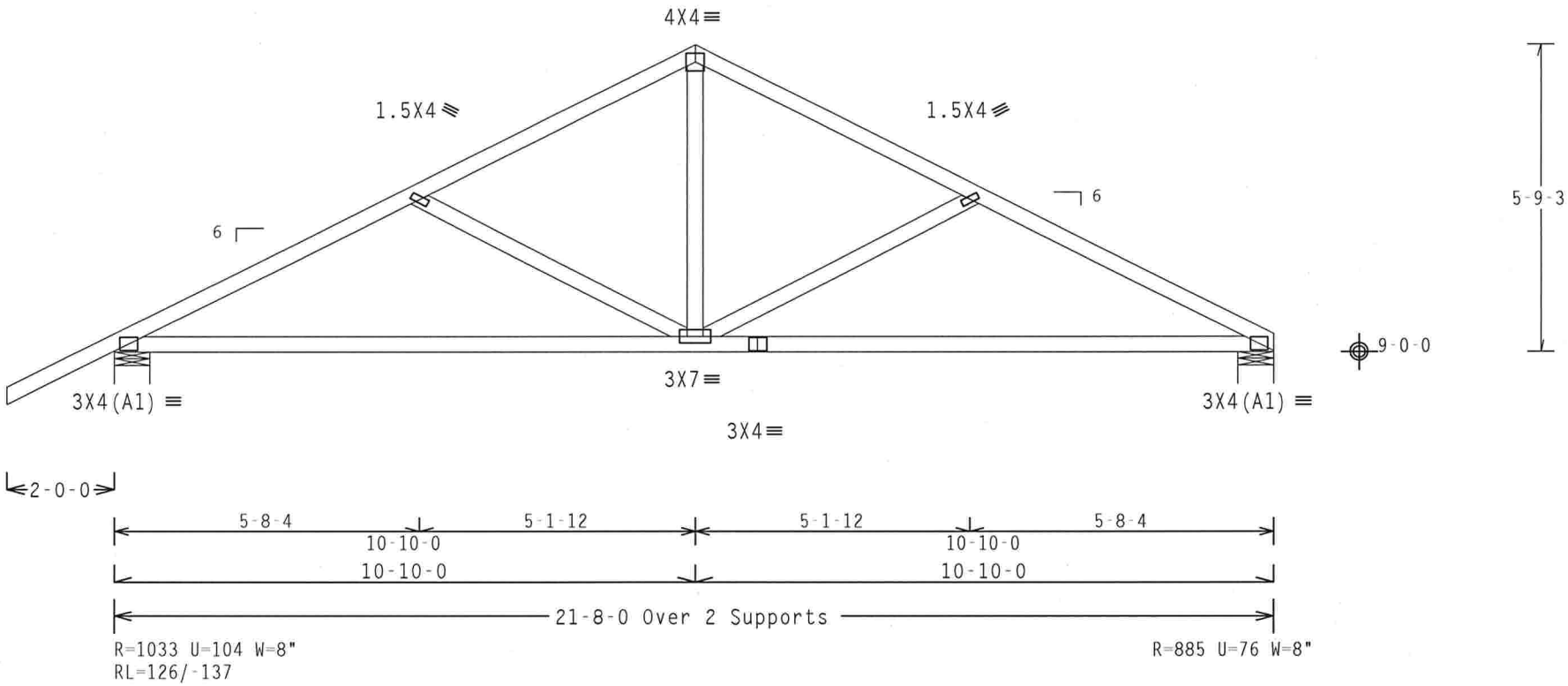

Design Crit: FBC2007Res/TPI-2002(STD)

PLT TYP. Wave | FT/RT=20%(0%)/0(0) | 8.07.00 | QTY:5 | FL/-/4/-/-/R/- | Scale =.3125"/Ft.

ALPINE
ITW Building Components Group Inc.
Haines City, FL 33844
FL COA #0 278

WARNING TRUSSES REQUIRE EXTREME CARE IN FABRICATION, HANDLING, SHIPPING, INSTALLING AND BRACING. REFER TO BCSI (BUILDING COMPONENT SAFETY INFORMATION), PUBLISHED BY TPI (TRUSS PLATE INSTITUTE, 218 NORTH LEE STREET, SUITE 312, ALEXANDRIA, VA, 22314) AND WTCA (WOOD TRUSS COUNCIL OF AMERICA, 6300 ENTERPRISE LANE, MADISON, WI 53719) FOR SAFETY PRACTICES PRIOR TO PERFORMING THESE FUNCTIONS. UNLESS OTHERWISE INDICATED TOP CHORD SHALL HAVE PROPERLY ATTACHED STRUCTURAL PANELS AND BOTTOM CHORD SHALL HAVE A PROPERLY ATTACHED RIGID CEILING.

IMPORTANT FURNISH A COPY OF THIS DESIGN TO THE INSTALLATION CONTRACTOR. ITW BCG, INC. SHALL NOT BE RESPONSIBLE FOR ANY DEVIATION FROM THIS DESIGN; ANY FAILURE TO BUILD THE TRUSS IN COMFORMANCE WITH TPI; OR FABRICATING, HANDLING, SHIPPING, INSTALLING & BRACING OF TRUSSES.
DESIGN CONFORMS WITH APPLICABLE PROVISIONS OF NDS (NATIONAL DESIGN SPEC, BY AF&PA) AND TPI. ITW BCG CONNECTOR PLATES ARE MADE OF 20/18/16GA (W.H/SS/K) ASTM A653 GRADE 40/60 (W. K/H.SS) GALV. STEEL. APPLY PLATES TO EACH FACE OF TRUSS AND, UNLESS OTHERWISE LOCATED ON THIS DESIGN, POSITION PER DRAWINGS 160A-Z. ANY INSPECTION OF PLATES FOLLOWED BY (1) SHALL BE PER ANNEX A3 OF TPI1-2002 SEC.3. A SEAL ON THIS DRAWING INDICATES ACCEPTANCE OF PROFESSIONAL ENGINEERING RESPONSIBILITY SOLELY FOR THE TRUSS COMPONENT DESIGN SHOWN. THE SUITABILITY AND USE OF THIS COMPONENT FOR ANY BUILDING IS THE RESPONSIBILITY OF THE BUILDING DESIGNER PER ANSI/TPI 1 SEC. 2.

DOUGLAS FLEMING LICENSE No. 66648 STATE OF FLORIDA PROFESSIONAL ENGINEER
03 '09

TC LL	20.0 PSF	REF R8228- 81795
TC DL	10.0 PSF	DATE 03/02/09
BC DL	10.0 PSF	DRW HCUSR8228 09061007
BC LL	0.0 PSF	HC-ENG DF/DF *
TOT.LD.	40.0 PSF	SEQN- 6311
DUR.FAC.	1.25	
SPACING	24.0"	JREF- 1TPM8228Z03

(9-057--OWNER BUILDER Travis Williams-Fazzino -- , ** - C1)

Top chord 2x4 SP #2 Dense
Bot chord 2x4 SP #2 Dense
Webs 2x4 SP #3

Roof overhang supports 2.00 psf soffit load.

Bottom chord checked for 10.00 psf non-concurrent live load.

110 mph wind, 15.00 ft mean hgt, ASCE 7-05, CLOSED bldg, Located anywhere in roof, CAT II, EXP B, wind TC DL=5.0 psf, wind BC DL=5.0 psf. Iw=1.00 GCpi(+/-)=0.18

Wind reactions based on MWFRS pressures.

Deflection meets L/240 live and L/180 total load.

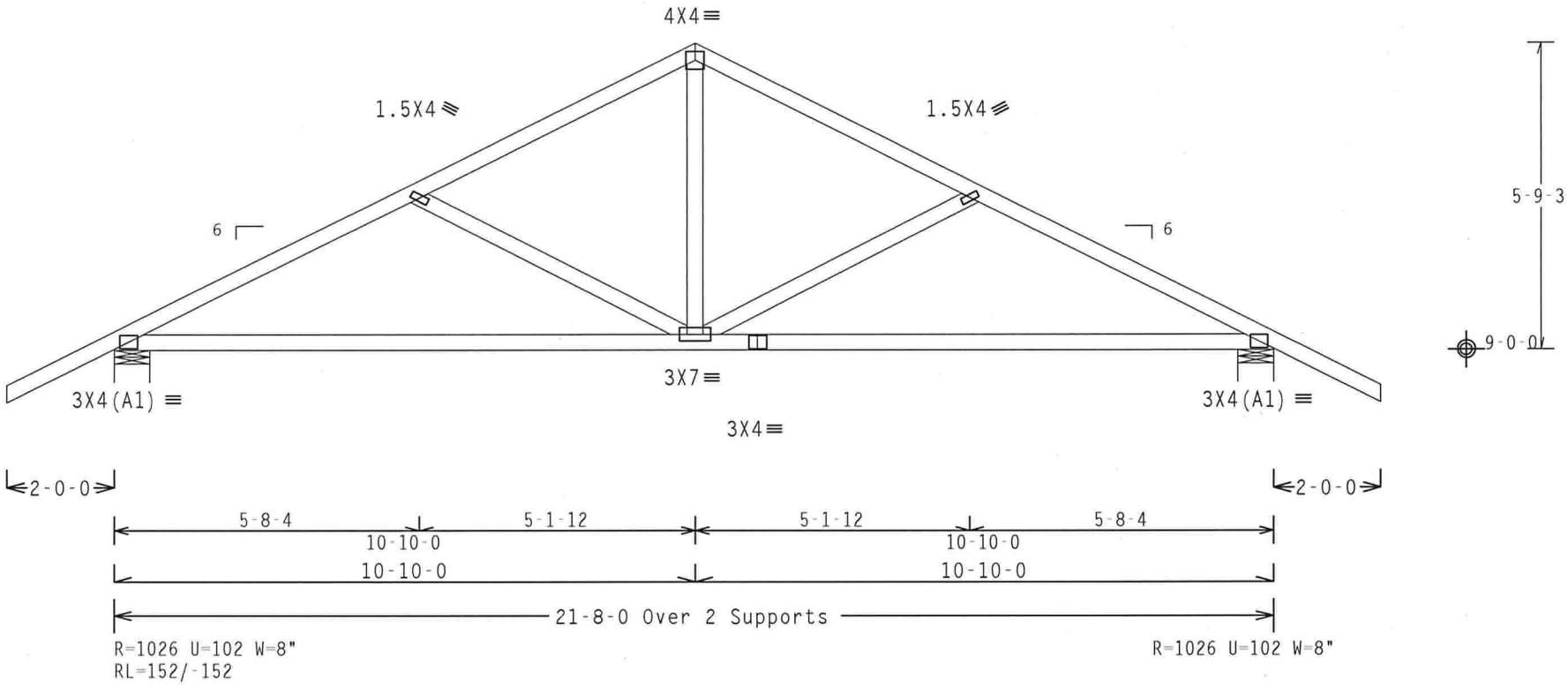

Design Crit: FBC2007Res/TPI-2002(STD)

PLT TYP. Wave | FT/RT=20%(0%)/0(0) | 8.07.00 [illegible] | QTY:2 | FL/-/4/-/-/R/- | Scale =.3125"/Ft.

ALPINE
ITW Building Components Group Inc.
Haines City, FL 33844
FL COA #0 278

WARNING TRUSSES REQUIRE EXTREME CARE IN FABRICATION, HANDLING, SHIPPING, INSTALLING AND BRACING. REFER TO BCSI (BUILDING COMPONENT SAFETY INFORMATION), PUBLISHED BY TPI (TRUSS PLATE INSTITUTE, 218 NORTH LEE STREET, SUITE 312, ALEXANDRIA, VA, 22314) AND WTCA (WOOD TRUSS COUNCIL OF AMERICA, 6300 ENTERPRISE LANE, MADISON, WI 53719) FOR SAFETY PRACTICES PRIOR TO PERFORMING THESE FUNCTIONS. UNLESS OTHERWISE INDICATED TOP CHORD SHALL HAVE PROPERLY ATTACHED STRUCTURAL PANELS AND BOTTOM CHORD SHALL HAVE A PROPERLY ATTACHED RIGID CEILING.

IMPORTANTFURNISH A COPY OF THIS DESIGN TO THE INSTALLATION CONTRACTOR. ITW BCG, INC. SHALL NOT BE RESPONSIBLE FOR ANY DEVIATION FROM THIS DESIGN; ANY FAILURE TO BUILD THE TRUSS IN COMFORMANCE WITH TPI; OR FABRICATING, HANDLING, SHIPPING, INSTALLING & BRACING OF TRUSSES.
DESIGN CONFORMS WITH APPLICABLE PROVISIONS OF NDS (NATIONAL DESIGN SPEC, BY AF&PA) AND TPI. ITW BCG CONNECTOR PLATES ARE MADE OF 20/18/16GA (W,H/SS/K) ASTM A653 GRADE 40/60 (W, K/H,SS) GALV. STEEL. APPLY PLATES TO EACH FACE OF TRUSS AND, UNLESS OTHERWISE LOCATED ON THIS DESIGN, POSITION PER DRAWINGS 160A-Z. ANY INSPECTION OF PLATES FOLLOWED BY (1) SHALL BE PER ANNEX A3 OF TPI1-2002 SEC.3. A SEAL ON THIS DRAWING INDICATES ACCEPTANCE OF PROFESSIONAL ENGINEERING RESPONSIBILITY SOLELY FOR THE TRUSS COMPONENT DESIGN SHOWN. THE SUITABILITY AND USE OF THIS COMPONENT FOR ANY BUILDING IS THE RESPONSIBILITY OF THE BUILDING DESIGNER PER ANSI/TPI 1 SEC. 2.

DOUGLAS FLEMING LICENSE No. 66648 STATE OF FLORIDA PROFESSIONAL ENGINEER
03 '09

TC LL	20.0 PSF	REF R8228- 81796
TC DL	10.0 PSF	DATE 03/02/09
BC DL	10.0 PSF	DRW HCUSR8228 09061008
BC LL	0.0 PSF	HC-ENG DF/DF *
TOT.LD.	40.0 PSF	SEQN- 6306
DUR.FAC.	1.25	
SPACING	24.0"	JREF- 1TPM8228Z03

(9-057--OWNER BUILDER Travis Williams-Fazzino -- , ** - C-GE)

Top chord 2x4 SP #2 Dense
Bot chord 2x4 SP #2 Dense
Webs 2x4 SP #3
:Stack Chord SC1 2x4 SP #2 Dense::Stack Chord SC2 2x4 SP #2 Dense:

Roof overhang supports 2.00 psf soffit load.

Gable end supports 8" max rake overhang.

See DWGS A11015050109 & GBLLETIN0109 for more requirements.

Bottom chord checked for 10.00 psf non-concurrent live load.

Deflection meets L/240 live and L/180 total load.

THE BUILDING DESIGNER IS RESPONSIBLE FOR THE DESIGN OF THE ROOF, FLOOR AND CEILING DIAPHRAGMS, GABLE END SHEAR WALLS, AND SUPPORTING SHEAR WALLS. DIAPHRAGMS AND SHEAR WALLS MUST PROVIDE CONTINUOUS LATERAL RESTRAINT TO THE GABLE END. ALL CONNECTIONS ARE TO BE PROVIDED BY THE BUILDING DESIGNER.

(**) 2 plate(s) require special positioning. Refer to scaled plate plot details for special positioning requirements.

110 mph wind, 15.00 ft mean hgt, ASCE 7-05, CLOSED bldg, Located anywhere in roof, CAT II, EXP B, wind TC DL=5.0 psf, wind BC DL=5.0 psf. Iw=1.00 GCpi(+/-)=0.18

Wind reactions based on MWFRS pressures.

Stacked top chord must NOT be notched or cut in area (NNL). Attach stacked top chord (SC) to dropped top chord in notchable area using 3x4 tie-plates 24" o.c. Center plate on stacked/dropped chord interface, plate length perpendicular to chord length. Splice top chord in notchable area using 3x6.

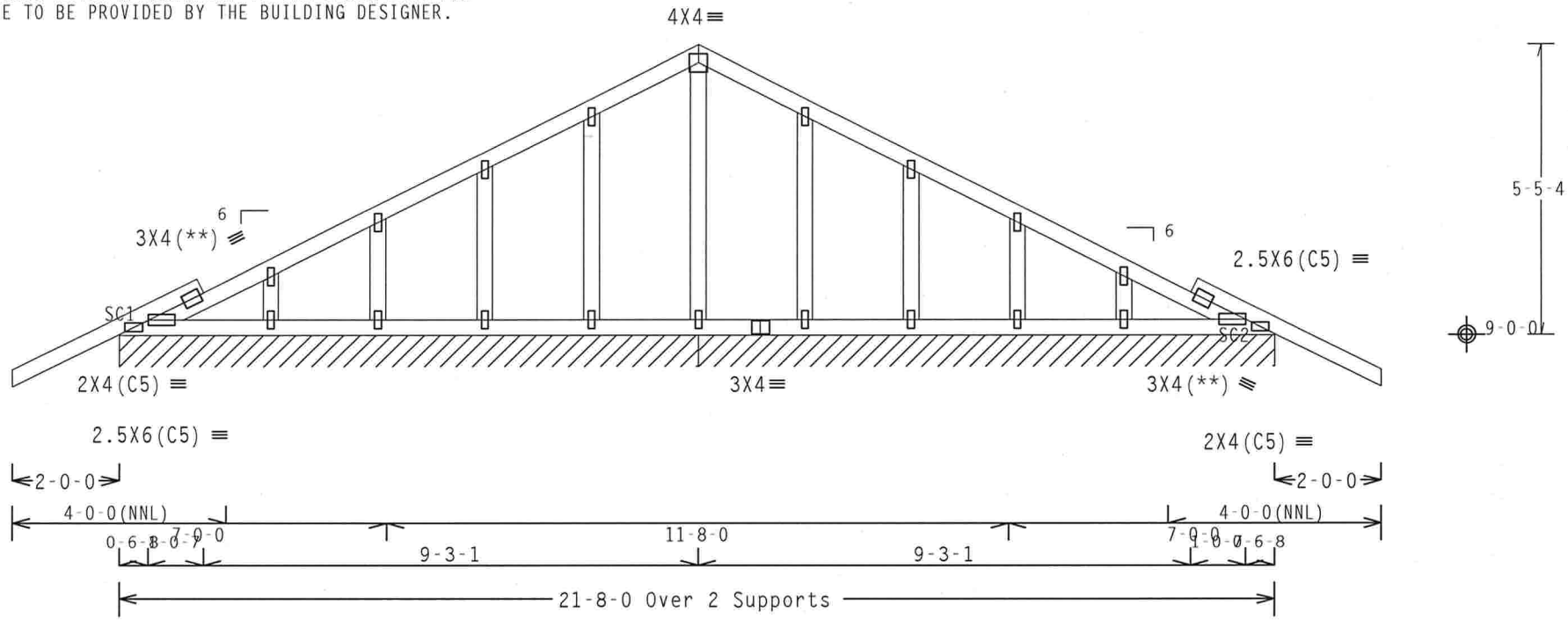

Note: All Plates Are 1.5X4 Except As Shown.

Design Crit: FBC2007Res/TPI-2002(STD)

PLT TYP. Wave | FT/RT=20%(0%)/0(0) | 8.07.00 | QTY:1 | FL/-/4/-/-/R/- | Scale =.3125"/Ft.

ALPINE
ITW Building Components Group Inc.
Haines City, FL 33844
FL COA #0278

WARNING TRUSSES REQUIRE EXTREME CARE IN FABRICATION, HANDLING, SHIPPING, INSTALLING AND BRACING. REFER TO BCSI (BUILDING COMPONENT SAFETY INFORMATION), PUBLISHED BY TPI (TRUSS PLATE INSTITUTE, 218 NORTH LEE STREET, SUITE 312, ALEXANDRIA, VA, 22314) AND WTCA (WOOD TRUSS COUNCIL OF AMERICA, 6300 ENTERPRISE LANE, MADISON, WI 53719) FOR SAFETY PRACTICES PRIOR TO PERFORMING THESE FUNCTIONS. UNLESS OTHERWISE INDICATED TOP CHORD SHALL HAVE PROPERLY ATTACHED STRUCTURAL PANELS AND BOTTOM CHORD SHALL HAVE A PROPERLY ATTACHED RIGID CEILING.

IMPORTANT FURNISH A COPY OF THIS DESIGN TO THE INSTALLATION CONTRACTOR. ITW BCG, INC. SHALL NOT BE RESPONSIBLE FOR ANY DEVIATION FROM THIS DESIGN; ANY FAILURE TO BUILD THE TRUSS IN COMFORMANCE WITH TPI; OR FABRICATING, HANDLING, SHIPPING, INSTALLING & BRACING OF TRUSSES. DESIGN CONFORMS WITH APPLICABLE PROVISIONS OF NDS (NATIONAL DESIGN SPEC. BY AF&PA) AND TPI. ITW BCG CONNECTOR PLATES ARE MADE OF 20/18/16GA (W,H/SS/K) ASTM A653 GRADE 40/60 (W, K/H,SS) GALV. STEEL. APPLY PLATES TO EACH FACE OF TRUSS AND, UNLESS OTHERWISE LOCATED ON THIS DESIGN, POSITION PER DRAWINGS 160A-Z. ANY INSPECTION OF PLATES FOLLOWED BY (1) SHALL BE PER ANNEX A3 OF TPI1-2002 SEC.3. A SEAL ON THIS DRAWING INDICATES ACCEPTANCE OF PROFESSIONAL ENGINEERING RESPONSIBILITY SOLELY FOR THE TRUSS COMPONENT DESIGN SHOWN. THE SUITABILITY AND USE OF THIS COMPONENT FOR ANY BUILDING IS THE RESPONSIBILITY OF THE BUILDING DESIGNER PER ANSI/TPI 1 SEC. 2.

DOUGLAS FLEMING LICENSE No. 66648 STATE OF FLORIDA PROFESSIONAL ENGINEER
MAR 03 '09

TC LL	20.0 PSF	REF	R8228- 81797
TC DL	10.0 PSF	DATE	03/02/09
BC DL	10.0 PSF	DRW	HCUSR8228 09061028
BC LL	0.0 PSF	HC-ENG	DF/DF
TOT.LD.	40.0 PSF	SEQN-	6302
DUR.FAC.	1.25		
SPACING	SEE ABOVE	JREF-	1TPM8228Z03

Top chord 2x4 SP #2 Dense
Bot chord 2x8 SP #1 Dense :B2 2x8 SP SS:
Webs 2x4 SP #3 :W6 2x4 SP #2 Dense:
:Lt Wedge 2x6 SP #3::Rt Wedge 2x6 SP #3:

SPECIAL LOADS
------(LUMBER DUR.FAC.=1.25 / PLATE DUR.FAC.=1.25)

TC - From	27 PLF	at -2.00 to	27 PLF	at 10.83	
TC - From	27 PLF	at 10.83 to	27 PLF	at 21.67	
BC - From	4 PLF	at -2.00 to	4 PLF	at 0.00	
BC - From	5 PLF	at 0.00 to	5 PLF	at 10.83	
BC - From	5 PLF	at 10.83 to	5 PLF	at 21.67	
BC -	3182 LB	Conc. Load at	7.12		
BC -	1569 LB	Conc. Load at	9.06, 11.06, 13.06, 15.06, 17.06		

19.06

Deflection meets L/240 live and L/180 total load.

2 COMPLETE TRUSSES REQUIRED

Nailing Schedule: (12d_Common_(0.148"x3.25",_min.)_nails)
Top Chord: 1 Row @12.00" o.c.
Bot Chord: 1 Row @ 3.25" o.c.
Webs : 1 Row @ 4" o.c.
Use equal spacing between rows and stagger nails in each row to avoid splitting.

110 mph wind, 15.00 ft mean hgt, ASCE 7-05, CLOSED bldg, not located within 4.50 ft from roof edge, CAT II, EXP B, wind TC DL=5.0 psf, wind BC DL=5.0 psf. Iw=1.00 GCpi(+/-)=0.18

Wind reactions based on MWFRS pressures.

Roof overhang supports 2.00 psf soffit load.

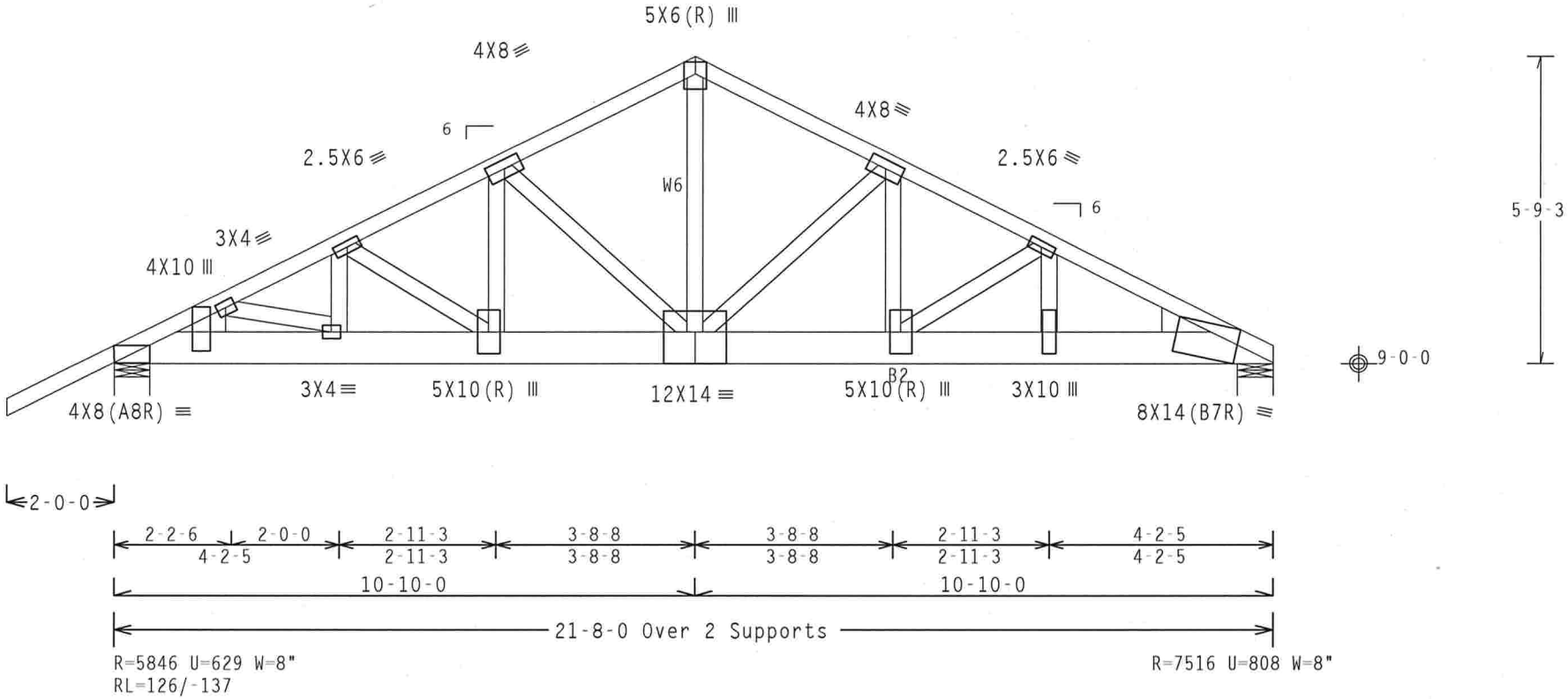

Design Crit: FBC2007Res/TPI-2002(STD)

PLT TYP. Wave | FT/RT=20%(0%)/0(0) | 8.07.00 | QTY:1 | FL/-/4/-/-/R/- | Scale =.3125"/Ft.

ALPINE
ITW Building Components Group Inc.
Haines City, FL 33844
FL [illegible] 278

WARNING TRUSSES REQUIRE EXTREME CARE IN FABRICATION, HANDLING, SHIPPING, INSTALLING AND BRACING. REFER TO BCSI (BUILDING COMPONENT SAFETY INFORMATION), PUBLISHED BY TPI (TRUSS PLATE INSTITUTE, 218 NORTH LEE STREET, SUITE 312, ALEXANDRIA, VA. 22314) AND WTCA (WOOD TRUSS COUNCIL OF AMERICA, 6300 ENTERPRISE LANE, MADISON, WI 53719) FOR SAFETY PRACTICES PRIOR TO PERFORMING THESE FUNCTIONS. UNLESS OTHERWISE INDICATED TOP CHORD SHALL HAVE PROPERLY ATTACHED STRUCTURAL PANELS AND BOTTOM CHORD SHALL HAVE A PROPERLY ATTACHED RIGID CEILING.

IMPORTANTFURNISH A COPY OF THIS DESIGN TO THE INSTALLATION CONTRACTOR. ITW BCG, INC. SHALL NOT BE RESPONSIBLE FOR ANY DEVIATION FROM THIS DESIGN; ANY FAILURE TO BUILD THE TRUSS IN COMFORMANCE WITH TPI; OR FABRICATING, HANDLING, SHIPPING, INSTALLING & BRACING OF TRUSSES.
DESIGN CONFORMS WITH APPLICABLE PROVISIONS OF NDS (NATIONAL DESIGN SPEC. BY AF&PA) AND TPI. ITW BCG CONNECTOR PLATES ARE MADE OF 20/18/16GA (W,H/SS/K) ASTM A653 GRADE 40/60 (W, K/H,SS) GALV. STEEL. APPLY PLATES TO EACH FACE OF TRUSS AND. UNLESS OTHERWISE LOCATED ON THIS DESIGN, POSITION PER DRAWINGS 160A-Z. ANY INSPECTION OF PLATES FOLLOWED BY (1) SHALL BE PER ANNEX A3 OF TPI1-2002 SEC.3. A SEAL ON THIS DRAWING INDICATES ACCEPTANCE OF PROFESSIONAL ENGINEERING RESPONSIBILITY SOLELY FOR THE TRUSS COMPONENT DESIGN SHOWN. THE SUITABILITY AND USE OF THIS COMPONENT FOR ANY BUILDING IS THE RESPONSIBILITY OF THE BUILDING DESIGNER PER ANSI/TPI 1 SEC. 2.

DOUGLAS FLEMING LICENSE No. 66648 STATE OF FLORIDA PROFESSIONAL ENGINEER
03 '09

TC LL	20.0 PSF	REF	R8228- 81798
TC DL	10.0 PSF	DATE	03/02/09
BC DL	10.0 PSF	DRW	HCUSR8228 09061033
BC LL	0.0 PSF	HC-ENG	DF/DF
TOT.LD.	40.0 PSF	SEQN-	4408 REV
DUR.FAC.	1.25		
SPACING	SEE ABOVE	JREF-	1TPM8228Z03

(9-057--OWNER BUILDER Travis Williams-Fazzino -- , ** - EJ7)

Top chord 2x4 SP #2 Dense
Bot chord 2x4 SP #2 Dense

Roof overhang supports 2.00 psf soffit load.

Bottom chord checked for 10.00 psf non-concurrent live load.

110 mph wind, 15.00 ft mean hgt, ASCE 7-05, PART._ENC. bldg, Located anywhere in roof, CAT II, EXP B, wind TC DL=5.0 psf, wind BC DL=5.0 psf. Iw=1.00 GCpi(+/-)=0.55

Wind reactions based on MWFRS pressures.

Deflection meets L/240 live and L/180 total load.

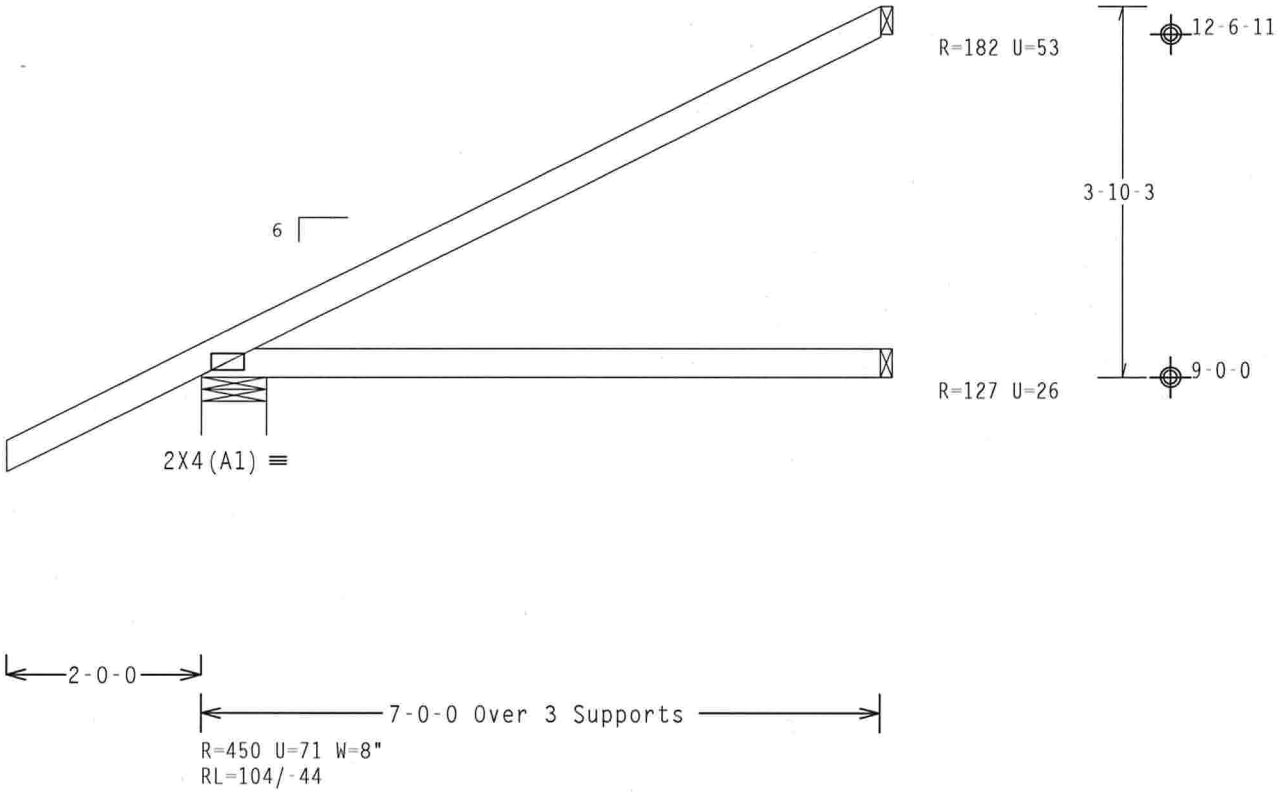

Design Crit: FBC2007Res/TPI-2002(STD)

PLT TYP. Wave FT/RT=20%(0%)/0(0) 8.07.00 QTY:33 FL/-/4/-/-/R/- Scale =.5"/Ft.

ALPINE
ITW Building Components Group Inc.
Haines City, FL 33844
FL [illegible] 278

WARNING TRUSSES REQUIRE EXTREME CARE IN FABRICATION, HANDLING, SHIPPING, INSTALLING AND BRACING. REFER TO BCSI (BUILDING COMPONENT SAFETY INFORMATION), PUBLISHED BY TPI (TRUSS PLATE INSTITUTE, 218 NORTH LEE STREET, SUITE 312, ALEXANDRIA, VA. 22314) AND WTCA (WOOD TRUSS COUNCIL OF AMERICA, 6300 ENTERPRISE LANE, MADISON, WI 53719) FOR SAFETY PRACTICES PRIOR TO PERFORMING THESE FUNCTIONS. UNLESS OTHERWISE INDICATED TOP CHORD SHALL HAVE PROPERLY ATTACHED STRUCTURAL PANELS AND BOTTOM CHORD SHALL HAVE A PROPERLY ATTACHED RIGID CEILING.

IMPORTANTFURNISH A COPY OF THIS DESIGN TO THE INSTALLATION CONTRACTOR. ITW BCG, INC. SHALL NOT BE RESPONSIBLE FOR ANY DEVIATION FROM THIS DESIGN; ANY FAILURE TO BUILD THE TRUSS IN COMFORMANCE WITH TPI; OR FABRICATING, HANDLING, SHIPPING, INSTALLING & BRACING OF TRUSSES.
DESIGN CONFORMS WITH APPLICABLE PROVISIONS OF NDS (NATIONAL DESIGN SPEC, BY AF&PA) AND TPI. ITW BCG CONNECTOR PLATES ARE MADE OF 20/18/16GA (W,H/SS/K) ASTM A653 GRADE 40/60 (W, K/H,SS) GALV. STEEL. APPLY PLATES TO EACH FACE OF TRUSS AND, UNLESS OTHERWISE LOCATED ON THIS DESIGN, POSITION PER DRAWINGS 160A-Z. ANY INSPECTION OF PLATES FOLLOWED BY (1) SHALL BE PER ANNEX A3 OF TPI1-2002 SEC.3. A SEAL ON THIS DRAWING INDICATES ACCEPTANCE OF PROFESSIONAL ENGINEERING RESPONSIBILITY SOLELY FOR THE TRUSS COMPONENT DESIGN SHOWN. THE SUITABILITY AND USE OF THIS COMPONENT FOR ANY BUILDING IS THE RESPONSIBILITY OF THE BUILDING DESIGNER PER ANSI/TPI 1 SEC. 2.

DOUGLAS FLEMING LICENSE No. 66648 STATE OF FLORIDA PROFESSIONAL ENGINEER
[illegible] 03 '09

TC LL	20.0 PSF	REF R8228- 81799
TC DL	10.0 PSF	DATE 03/02/09
BC DL	10.0 PSF	DRW HCUSR8228 09061009
BC LL	0.0 PSF	HC-ENG DF/DF *
TOT.LD.	40.0 PSF	SEQN- 6099
DUR.FAC.	1.25	
SPACING	24.0"	JREF- 1TPM8228Z03

Top chord 2x4 SP #2 Dense
Bot chord 2x4 SP #2 Dense

Roof overhang supports 2.00 psf soffit load.

Bottom chord checked for 10.00 psf non-concurrent live load.

110 mph wind, 15.00 ft mean hgt, ASCE 7-05, PART._ENC. bldg, Located anywhere in roof, CAT II, EXP B, wind TC DL=5.0 psf, wind BC DL=5.0 psf. Iw=1.00 GCpi(+/-)=0.55

Wind reactions based on MWFRS pressures.

Deflection meets L/240 live and L/180 total load.

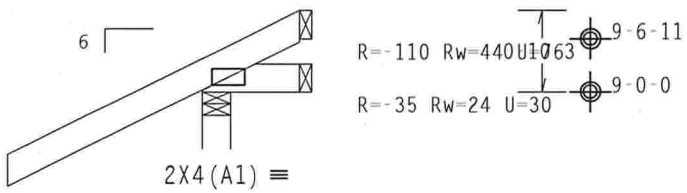

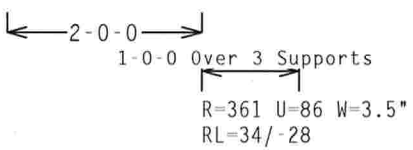

Design Crit: FBC2007Res/TPI-2002(STD)

PLT TYP. Wave FT/RT=20%(0%)/0(0) 8.07.00 [illegible] QTY:6 FL/-/4/-/-/R/- Scale =.5"/Ft.

ALPINE
ITW Building Components Group Inc.
Haines City, FL 33844
FL COA #0278

WARNING TRUSSES REQUIRE EXTREME CARE IN FABRICATION, HANDLING, SHIPPING, INSTALLING AND BRACING. REFER TO BCSI (BUILDING COMPONENT SAFETY INFORMATION), PUBLISHED BY TPI (TRUSS PLATE INSTITUTE, 218 NORTH LEE STREET, SUITE 312, ALEXANDRIA, VA. 22314) AND WTCA (WOOD TRUSS COUNCIL OF AMERICA, 6300 ENTERPRISE LANE, MADISON, WI 53719) FOR SAFETY PRACTICES PRIOR TO PERFORMING THESE FUNCTIONS. UNLESS OTHERWISE INDICATED TOP CHORD SHALL HAVE PROPERLY ATTACHED STRUCTURAL PANELS AND BOTTOM CHORD SHALL HAVE A PROPERLY ATTACHED RIGID CEILING.

IMPORTANTFURNISH A COPY OF THIS DESIGN TO THE INSTALLATION CONTRACTOR. ITW BCG, INC. SHALL NOT BE RESPONSIBLE FOR ANY DEVIATION FROM THIS DESIGN; ANY FAILURE TO BUILD THE TRUSS IN COMFORMANCE WITH TPI; OR FABRICATING, HANDLING, SHIPPING, INSTALLING & BRACING OF TRUSSES.
DESIGN CONFORMS WITH APPLICABLE PROVISIONS OF NDS (NATIONAL DESIGN SPEC, BY AF&PA) AND TPI. ITW BCG CONNECTOR PLATES ARE MADE OF 20/18/16GA (W,H/SS/K) ASTM A653 GRADE 40/60 (W, K/H,SS) GALV. STEEL. APPLY PLATES TO EACH FACE OF TRUSS AND, UNLESS OTHERWISE LOCATED ON THIS DESIGN, POSITION PER DRAWINGS 160A-Z. ANY INSPECTION OF PLATES FOLLOWED BY (1) SHALL BE PER ANNEX A3 OF TPI1-2002 SEC.3. A SEAL ON THIS DRAWING INDICATES ACCEPTANCE OF PROFESSIONAL ENGINEERING RESPONSIBILITY SOLELY FOR THE TRUSS COMPONENT DESIGN SHOWN. THE SUITABILITY AND USE OF THIS COMPONENT FOR ANY BUILDING IS THE RESPONSIBILITY OF THE BUILDING DESIGNER PER ANSI/TPI 1 SEC. 2.

DOUGLAS FLEMING LICENSE No. 66648 STATE OF FLORIDA PROFESSIONAL ENGINEER
03 '09

TC LL	20.0 PSF	REF	R8228- 81800
TC DL	10.0 PSF	DATE	03/02/09
BC DL	10.0 PSF	DRW	HCUSR8228 09061029
BC LL	0.0 PSF	HC-ENG	DF/DF
TOT.LD.	40.0 PSF	SEQN-	6090
DUR.FAC.	1.25		
SPACING	24.0"	JREF-	1TPM8228Z03

(9-057--OWNER BUILDER Travis Williams-Fazzino -- , ** - J3)

Top chord 2x4 SP #2 Dense
Bot chord 2x4 SP #2 Dense

Roof overhang supports 2.00 psf soffit load.

Bottom chord checked for 10.00 psf non-concurrent live load.

110 mph wind, 15.00 ft mean hgt, ASCE 7-05, PART._ENC. bldg, Located anywhere in roof, CAT II, EXP B, wind TC DL=5.0 psf, wind BC DL=5.0 psf. Iw=1.00 GCpi(+/-)=0.55

Wind reactions based on MWFRS pressures.

Deflection meets L/240 live and L/180 total load.

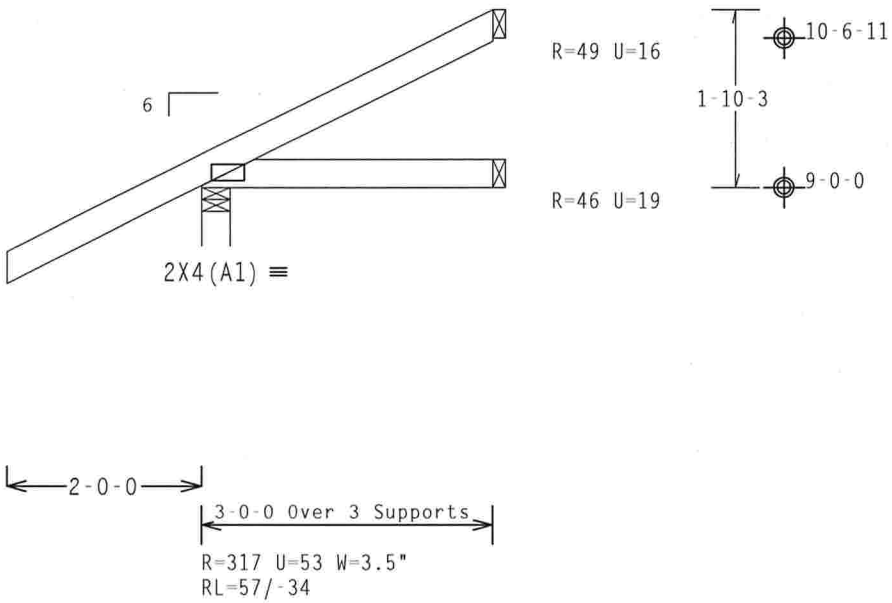

Design Crit: FBC2007Res/TPI-2002(STD)

PLT TYP. Wave FT/RT=20%(0%)/0(0) 8.07.00 QTY:6 FL/-/4/-/-/R/- Scale =.5"/Ft.

ALPINE
ITW Building Components Group Inc.
Haines City, FL 33844
FL COA #0 278

WARNING TRUSSES REQUIRE EXTREME CARE IN FABRICATION, HANDLING, SHIPPING, INSTALLING AND BRACING. REFER TO BCSI (BUILDING COMPONENT SAFETY INFORMATION), PUBLISHED BY TPI (TRUSS PLATE INSTITUTE, 218 NORTH LEE STREET, SUITE 312, ALEXANDRIA, VA, 22314) AND WTCA (WOOD TRUSS COUNCIL OF AMERICA, 6300 ENTERPRISE LANE, MADISON, WI 53719) FOR SAFETY PRACTICES PRIOR TO PERFORMING THESE FUNCTIONS. UNLESS OTHERWISE INDICATED TOP CHORD SHALL HAVE PROPERLY ATTACHED STRUCTURAL PANELS AND BOTTOM CHORD SHALL HAVE A PROPERLY ATTACHED RIGID CEILING.

IMPORTANTFURNISH A COPY OF THIS DESIGN TO THE INSTALLATION CONTRACTOR. ITW BCG, INC. SHALL NOT BE RESPONSIBLE FOR ANY DEVIATION FROM THIS DESIGN; ANY FAILURE TO BUILD THE TRUSS IN COMFORMANCE WITH TPI; OR FABRICATING, HANDLING, SHIPPING, INSTALLING & BRACING OF TRUSSES.
DESIGN CONFORMS WITH APPLICABLE PROVISIONS OF NDS (NATIONAL DESIGN SPEC, BY AF&PA) AND TPI. ITW BCG CONNECTOR PLATES ARE MADE OF 20/18/16GA (W,H/SS/K) ASTM A653 GRADE 40/60 (W, K/H,SS) GALV. STEEL. APPLY PLATES TO EACH FACE OF TRUSS AND, UNLESS OTHERWISE LOCATED ON THIS DESIGN, POSITION PER DRAWINGS 160A-Z. ANY INSPECTION OF PLATES FOLLOWED BY (1) SHALL BE PER ANNEX A3 OF TPI1-2002 SEC.3. A SEAL ON THIS DRAWING INDICATES ACCEPTANCE OF PROFESSIONAL ENGINEERING RESPONSIBILITY SOLELY FOR THE TRUSS COMPONENT DESIGN SHOWN. THE SUITABILITY AND USE OF THIS COMPONENT FOR ANY BUILDING IS THE RESPONSIBILITY OF THE BUILDING DESIGNER PER ANSI/TPI 1 SEC. 2.

DOUGLAS FLEMING LICENSE No. 66648 STATE OF FLORIDA PROFESSIONAL ENGINEER
03 '09

TC LL	20.0 PSF	REF	R8228- 81801
TC DL	10.0 PSF	DATE	03/02/09
BC DL	10.0 PSF	DRW	HCUSR8228 09061010
BC LL	0.0 PSF	HC-ENG	DF/DF *
TOT.LD.	40.0 PSF	SEQN-	6093
DUR.FAC.	1.25		
SPACING	24.0"	JREF-	1TPM8228Z03

(9-057--OWNER BUILDER Travis Williams-Fazzino -- , ** - J5)

Top chord 2x4 SP #2 Dense
Bot chord 2x4 SP #2 Dense

Roof overhang supports 2.00 psf soffit load.

Bottom chord checked for 10.00 psf non-concurrent live load.

110 mph wind, 15.00 ft mean hgt, ASCE 7-05, PART. ENC. bldg, not located within 4.50 ft from roof edge, CAT II, EXP B, wind TC DL=5.0 psf, wind BC DL=5.0 psf. Iw=1.00 GCpi(+/-)=0.55

Wind reactions based on MWFRS pressures.

Deflection meets L/240 live and L/180 total load.

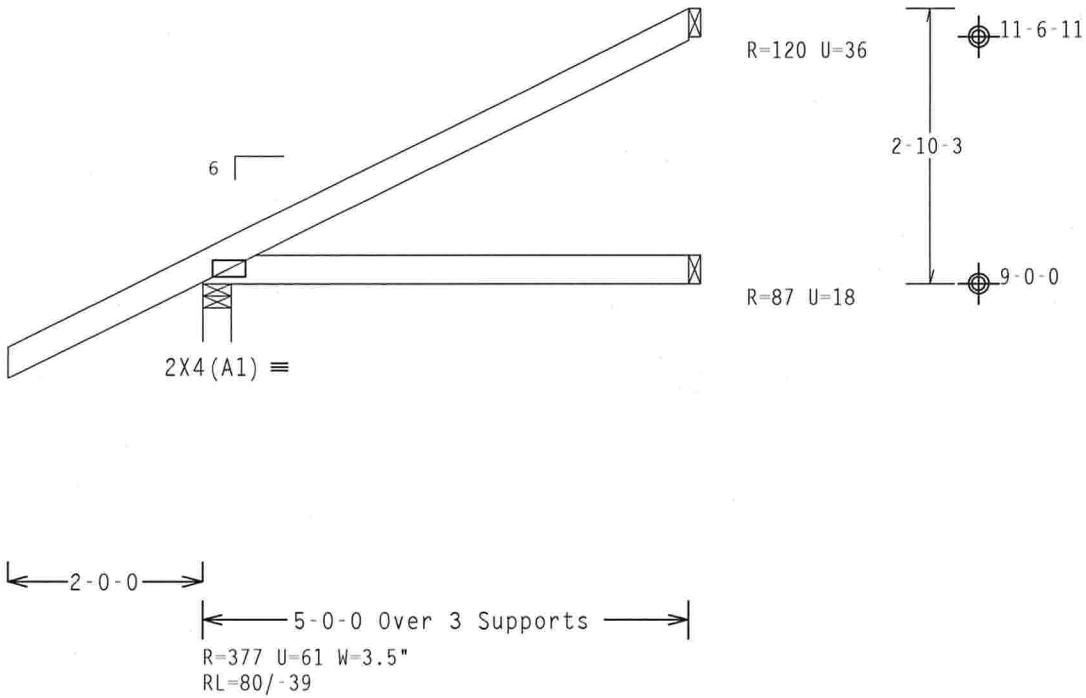

Design Crit: FBC2007Res/TPI-2002(STD)

PLT TYP. Wave FT/RT=20%(0%)/0(0) 8.07.00 QTY:6 FL/-/4/-/-/R/- Scale =.5"/Ft.

WARNING TRUSSES REQUIRE EXTREME CARE IN FABRICATION, HANDLING, SHIPPING, INSTALLING AND BRACING. REFER TO BCSI (BUILDING COMPONENT SAFETY INFORMATION), PUBLISHED BY TPI (TRUSS PLATE INSTITUTE, 218 NORTH LEE STREET, SUITE 312, ALEXANDRIA, VA, 22314) AND WTCA (WOOD TRUSS COUNCIL OF AMERICA, 6300 ENTERPRISE LANE, MADISON, WI 53719) FOR SAFETY PRACTICES PRIOR TO PERFORMING THESE FUNCTIONS. UNLESS OTHERWISE INDICATED TOP CHORD SHALL HAVE PROPERLY ATTACHED STRUCTURAL PANELS AND BOTTOM CHORD SHALL HAVE A PROPERLY ATTACHED RIGID CEILING.

IMPORTANTFURNISH A COPY OF THIS DESIGN TO THE INSTALLATION CONTRACTOR. ITW BCG, INC. SHALL NOT BE RESPONSIBLE FOR ANY DEVIATION FROM THIS DESIGN; ANY FAILURE TO BUILD THE TRUSS IN COMFORMANCE WITH TPI; OR FABRICATING, HANDLING, SHIPPING, INSTALLING & BRACING OF TRUSSES.
DESIGN CONFORMS WITH APPLICABLE PROVISIONS OF NDS (NATIONAL DESIGN SPEC, BY AF&PA) AND TPI. ITW BCG CONNECTOR PLATES ARE MADE OF 20/18/16GA (W,H/SS/K) ASTM A653 GRADE 40/60 (W, K/H,SS) GALV. STEEL. APPLY PLATES TO EACH FACE OF TRUSS AND, UNLESS OTHERWISE LOCATED ON THIS DESIGN, POSITION PER DRAWINGS 160A-Z. ANY INSPECTION OF PLATES FOLLOWED BY (1) SHALL BE PER ANNEX A3 OF TPI1-2002 SEC.3. A SEAL ON THIS DRAWING INDICATES ACCEPTANCE OF PROFESSIONAL ENGINEERING RESPONSIBILITY SOLELY FOR THE TRUSS COMPONENT DESIGN SHOWN. THE SUITABILITY AND USE OF THIS COMPONENT FOR ANY BUILDING IS THE RESPONSIBILITY OF THE BUILDING DESIGNER PER ANSI/TPI 1 SEC. 2.

DOUGLAS FLEMING LICENSE No. 66648 STATE OF FLORIDA PROFESSIONAL ENGINEER
03 '09

TC LL	20.0 PSF	REF R8228- 81802
TC DL	10.0 PSF	DATE 03/02/09
BC DL	10.0 PSF	DRW HCUSR8228 09061030
BC LL	0.0 PSF	HC-ENG DF/DF
TOT.LD.	40.0 PSF	SEQN- 6096
DUR.FAC.	1.25	
SPACING	24.0"	JREF- 1TPM8228Z03

ALPINE
ITW Building Components Group Inc.
Haines City, FL 33844
FL COA #0 278

Top chord 2x4 SP #2 Dense
Bot chord 2x4 SP #2 Dense
Webs 2x4 SP #3

Hipjack supports 7-0-0 setback jacks with no webs.

Deflection meets L/240 live and L/180 total load.

110 mph wind, 15.00 ft mean hgt, ASCE 7-05, CLOSED bldg, Located anywhere in roof, CAT II, EXP B, wind TC DL=5.0 psf, wind BC DL=5.0 psf. Iw=1.00 GCpi(+/-)=0.18

Wind reactions based on MWFRS pressures.

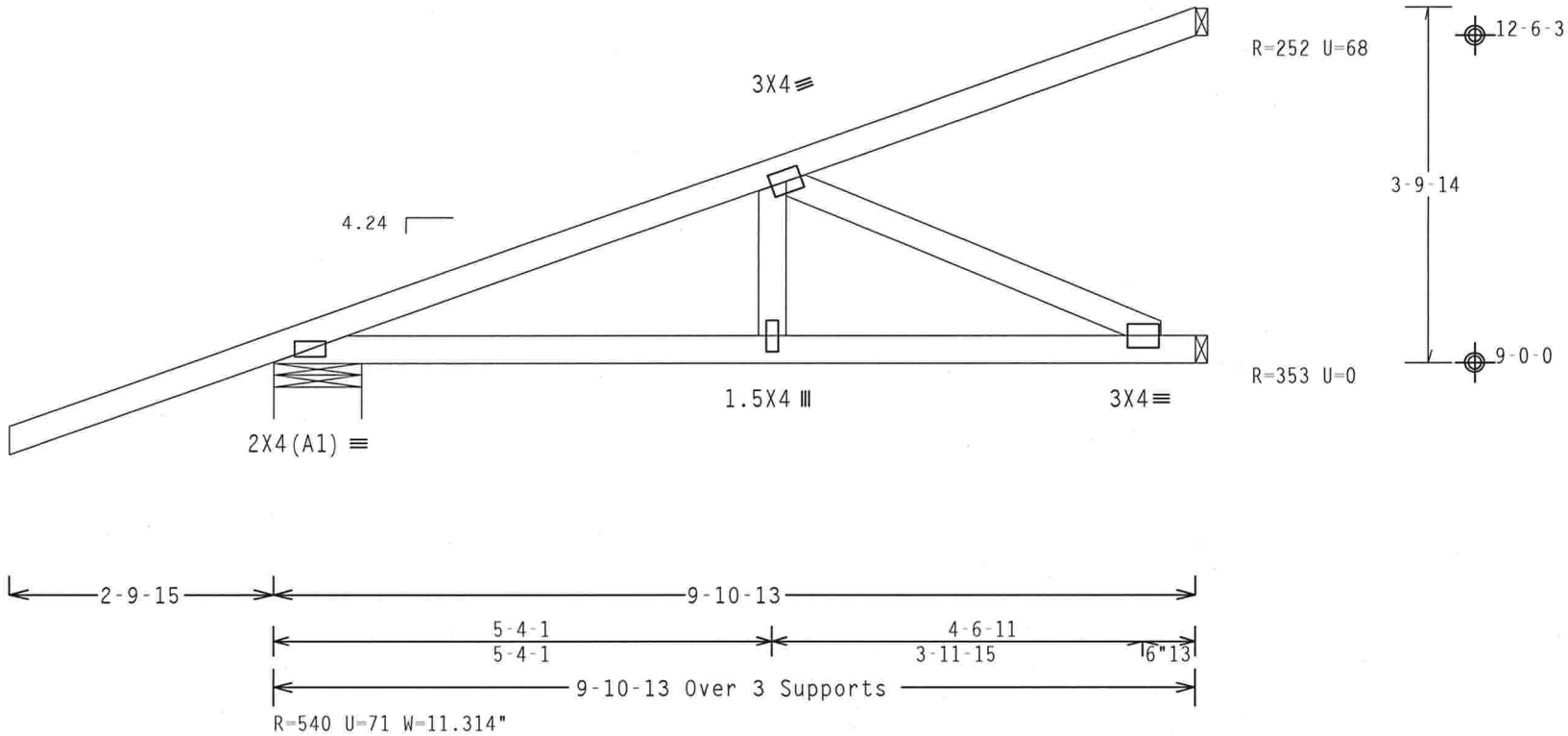

Design Crit: FBC2007Res/TPI-2002(STD)

PLT TYP. Wave FT/RT=20%(0%)/0(0) 8.07.00 [illegible] QTY:3 FL/-/4/-/-/R/- Scale =.5"/Ft.

ALPINE
ITW Building Components Group Inc.
Haines City, FL 33844
FL COA #0278

WARNING TRUSSES REQUIRE EXTREME CARE IN FABRICATION, HANDLING, SHIPPING, INSTALLING AND BRACING. REFER TO BCSI (BUILDING COMPONENT SAFETY INFORMATION), PUBLISHED BY TPI (TRUSS PLATE INSTITUTE, 218 NORTH LEE STREET, SUITE 312, ALEXANDRIA, VA. 22314) AND WTCA (WOOD TRUSS COUNCIL OF AMERICA, 6300 ENTERPRISE LANE, MADISON, WI 53719) FOR SAFETY PRACTICES PRIOR TO PERFORMING THESE FUNCTIONS. UNLESS OTHERWISE INDICATED TOP CHORD SHALL HAVE PROPERLY ATTACHED STRUCTURAL PANELS AND BOTTOM CHORD SHALL HAVE A PROPERLY ATTACHED RIGID CEILING.

IMPORTANTFURNISH A COPY OF THIS DESIGN TO THE INSTALLATION CONTRACTOR. ITW BCG, INC. SHALL NOT BE RESPONSIBLE FOR ANY DEVIATION FROM THIS DESIGN; ANY FAILURE TO BUILD THE TRUSS IN COMFORMANCE WITH TPI; OR FABRICATING, HANDLING, SHIPPING, INSTALLING & BRACING OF TRUSSES. DESIGN CONFORMS WITH APPLICABLE PROVISIONS OF NDS (NATIONAL DESIGN SPEC, BY AF&PA) AND TPI. ITW BCG CONNECTOR PLATES ARE MADE OF 20/18/16GA (W,H/SS/K) ASTM A653 GRADE 40/60 (W, K/H,SS) GALV. STEEL. APPLY PLATES TO EACH FACE OF TRUSS AND, UNLESS OTHERWISE LOCATED ON THIS DESIGN, POSITION PER DRAWINGS 160A-Z. ANY INSPECTION OF PLATES FOLLOWED BY (1) SHALL BE PER ANNEX A3 OF TPI1-2002 SEC.3. A SEAL ON THIS DRAWING INDICATES ACCEPTANCE OF PROFESSIONAL ENGINEERING RESPONSIBILITY SOLELY FOR THE TRUSS COMPONENT DESIGN SHOWN. THE SUITABILITY AND USE OF THIS COMPONENT FOR ANY BUILDING IS THE RESPONSIBILITY OF THE BUILDING DESIGNER PER ANSI/TPI 1 SEC. 2.

DOUGLAS FLEMING LICENSE No. 66648 STATE OF FLORIDA PROFESSIONAL ENGINEER
MAR 03 '09

TC LL	20.0 PSF	REF	R8228- 81803
TC DL	10.0 PSF	DATE	03/02/09
BC DL	10.0 PSF	DRW	HCUSR8228 09061031
BC LL	0.0 PSF	HC-ENG	DF/DF
TOT.LD.	40.0 PSF	SEQN-	6107
DUR.FAC.	1.25		
SPACING	SEE ABOVE	JREF-	1TPM8228Z03

(9-057--OWNER BUILDER Travis Williams-Fazzino -- , ** - PB1)

Top chord 2x4 SP #2 Dense
Bot chord 2x4 SP #2 Dense

110 mph wind, 20.35 ft mean hgt, ASCE 7-05, CLOSED bldg, Located anywhere in roof, CAT II, EXP B, wind TC DL=5.0 psf, wind BC DL=2.0 psf. Iw=1.00 GCpi(+/-)=0.18

Wind reactions based on MWFRS pressures.

Refer to DWG PB1400109 for piggyback details.

SPECIAL LOADS
------(LUMBER DUR.FAC.=1.25 / PLATE DUR.FAC.=1.25)

TC - From	62 PLF	at	0.00 to	62 PLF	at	2.03
TC - From	62 PLF	at	2.03 to	62 PLF	at	4.06
BC - From	4 PLF	at	0.00 to	4 PLF	at	4.06

In lieu of rigid ceiling use purlins to brace BC @ 24" OC.

Deflection meets L/240 live and L/180 total load.

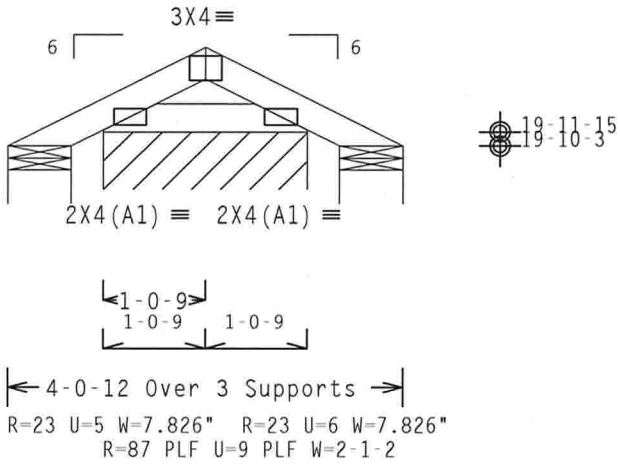

Design Crit: FBC2007Res/TPI-2002(STD)

PLT TYP. Wave FT/RT=20%(0%)/0(0) 8.07.00 12/16/08 QTY:5 FL/-/4/-/-/R/- Scale =.5"/Ft.

ALPINE
ITW Building Components Group Inc.
Haines City, FL 33844
FL COA #0 278

WARNING TRUSSES REQUIRE EXTREME CARE IN FABRICATION, HANDLING, SHIPPING, INSTALLING AND BRACING. REFER TO BCSI (BUILDING COMPONENT SAFETY INFORMATION), PUBLISHED BY TPI (TRUSS PLATE INSTITUTE, 218 NORTH LEE STREET, SUITE 312, ALEXANDRIA, VA. 22314) AND WTCA (WOOD TRUSS COUNCIL OF AMERICA, 6300 ENTERPRISE LANE, MADISON, WI 53719) FOR SAFETY PRACTICES PRIOR TO PERFORMING THESE FUNCTIONS. UNLESS OTHERWISE INDICATED TOP CHORD SHALL HAVE PROPERLY ATTACHED STRUCTURAL PANELS AND BOTTOM CHORD SHALL HAVE A PROPERLY ATTACHED RIGID CEILING.

IMPORTANTFURNISH A COPY OF THIS DESIGN TO THE INSTALLATION CONTRACTOR. ITW BCG, INC. SHALL NOT BE RESPONSIBLE FOR ANY DEVIATION FROM THIS DESIGN; ANY FAILURE TO BUILD THE TRUSS IN COMFORMANCE WITH TPI; OR FABRICATING, HANDLING, SHIPPING, INSTALLING & BRACING OF TRUSSES.
DESIGN CONFORMS WITH APPLICABLE PROVISIONS OF NDS (NATIONAL DESIGN SPEC. BY AF&PA) AND TPI. ITW BCG CONNECTOR PLATES ARE MADE OF 20/18/16GA (W,H/SS/K) ASTM A653 GRADE 40/60 (W, K/H,SS) GALV. STEEL. APPLY PLATES TO EACH FACE OF TRUSS AND, UNLESS OTHERWISE LOCATED ON THIS DESIGN, POSITION PER DRAWINGS 160A-Z. ANY INSPECTION OF PLATES FOLLOWED BY (1) SHALL BE PER ANNEX A3 OF TPI1-2002 SEC.3. A SEAL ON THIS DRAWING INDICATES ACCEPTANCE OF PROFESSIONAL ENGINEERING RESPONSIBILITY SOLELY FOR THE TRUSS COMPONENT DESIGN SHOWN. THE SUITABILITY AND USE OF THIS COMPONENT FOR ANY BUILDING IS THE RESPONSIBILITY OF THE BUILDING DESIGNER PER ANSI/TPI 1 SEC. 2.

DOUGLAS FLEMING LICENSE No. 66648 STATE OF FLORIDA PROFESSIONAL ENGINEER
03 '09

TC LL	20.0 PSF	REF R8228- 81804
TC DL	10.0 PSF	DATE 03/02/09
BC DL	10.0 PSF	DRW HCUSR8228 09061032
BC LL	0.0 PSF	HC-ENG DF/DF
TOT.LD.	40.0 PSF	SEQN- 6194
DUR.FAC.	1.25	
SPACING	24.0"	JREF- 1TPM8228Z03

CLB WEB BRACE SUBSTITUTION

THIS DETAIL IS TO BE USED WHEN CONTINUOUS LATERAL BRACING (CLB) IS SPECIFIED ON A TRUSS DESIGN BUT AN ALTERNATIVE WEB BRACING METHOD IS DESIRED.

NOTES:

THIS DETAIL IS ONLY APPLICABLE FOR CHANGING THE SPECIFIED CLB SHOWN ON SINGLE PLY SEALED DESIGNS TO T-BRACING OR SCAB BRACING.

ALTERNATIVE BRACING SPECIFIED IN CHART BELOW MAY BE CONSERVATIVE. FOR MINIMUM ALTERNATIVE BRACING, RE-RUN DESIGN WITH APPROPRIATE BRACING.

WEB MEMBER SIZE	SPECIFIED CLB BRACING	ALTERNATIVE BRACING T OR L-BRACE	ALTERNATIVE BRACING SCAB BRACE
2X3 OR 2X4	1 ROW	2X4	1-2X4
2X3 OR 2X4	2 ROWS	2X6	2-2X4
2X6	1 ROW	2X4	1-2X6
2X6	2 ROWS	2X6	2-2X4(*)
2X8	1 ROW	2X6	1-2X8
2X8	2 ROWS	2X6	2-2X6(*)

T-BRACE, L-BRACE AND SCAB BRACE TO BE SAME SPECIES AND GRADE OR BETTER THAN WEB MEMBER UNLESS SPECIFIED OTHERWISE ON ENGINEER'S SEALED DESIGN.

(*) CENTER SCAB ON WIDE FACE OF WEB. APPLY (1) SCAB TO EACH FACE OF WEB.

T-BRACING OR L-BRACING:

APPLY TO EITHER SIDE OF WEB NARROW FACE.
ATTACH WITH 10d BOX OR GUN
(0.128"x 3.",MIN) NAILS.
AT 6" O.C.
BRACE IS A
MINIMUM 80% OF WEB
MEMBER LENGTH

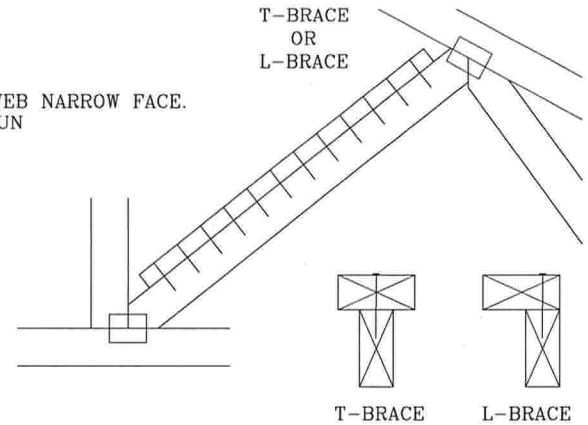

SCAB BRACING:

APPLY SCAB(S) TO WIDE FACE OF WEB.
NO MORE THAN (1) SCAB PER FACE.
ATTACH WITH 10d BOX OR GUN
(0.128"x 3.",MIN) NAILS.
AT 6" O.C.
BRACE IS A MINIMUM
80% OF WEB MEMBER LENGTH

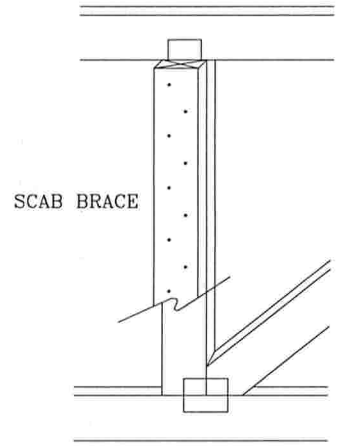

ITW Building Components Group Inc.

Earth City, MO 63045

WARNING READ AND FOLLOW ALL NOTES ON THIS SHEET!
Trusses require extreme care in fabricating, handling, shipping, installing and bracing. Refer to and follow BCSI (Building Component Safety Information, by TPI and WTCA) for safety practices prior to performing these functions. Installers shall provide temporary bracing per BCSI. Unless noted otherwise, top chord shall have properly attached structural panels and bottom chord shall have a properly attached rigid ceiling. Locations shown for permanent lateral restraint of webs shall have bracing installed per BCSI sections B3 & B7. See this job's general notes page for more information.

IMPORTANT FURNISH COPY OF THIS DESIGN TO INSTALLATION CONTRACTOR.
ITW Building Components Group Inc. (ITWBCG) shall not be responsible for any deviation from this design, any failure to build the truss in conformance with TPI, or fabricating, handling, shipping, installing & bracing of trusses. ITWBCG connector plates are made of 20/18/16GA (W,H/S/K) ASTM A653 grade 37/40/60 (K/W/H,S) galv. steel. Apply plates to each face of truss, positioned as shown above and on Joint Details. A seal on this drawing or cover page indicates acceptance and professional engineering responsibility solely for the truss component design shown. The suitability and use of this component for any building is the responsibility of the Building Designer per ANST/TPI 1 Sec. 2.
ITW-BCG: www.itwbcg.com; TPI: www.tpinst.com; WTCA: www.sbcindustry.com; ICC: www.iccsafe.org

DOUGLAS FLEMING LICENSE No. 66648 STATE OF FLORIDA PROFESSIONAL ENGINEER
Mar 03 09

TC LL	PSF	REF CLB SUBST.
TC DL	PSF	DATE 1/1/09
BC DL	PSF	DRWG BRCLBSUB0109
BC LL	PSF	
TOT. LD.	PSF	
DUR. FAC.		
SPACING		

VALLEY TRUSS DETAIL

TOP CHORD 2X4 SP #2N, SPF #1/#2, DF-L #2 OR BETTER.
BOT CHORD 2X4 SP #2N OR SPF #1/#2 OR BETTER.
WEBS 2X4 SP #2N, SPF #1/#2, DF-L #2 OR BETTER.

** ATTACH EACH VALLEY TO EVERY SUPPORTING TRUSS WITH: (2) 16d BOX (0.135" X 3.5") NAILS TOE-NAILED FOR SBC 110 MPH, ASCE 7-93 110 MPH OR ASCE 7-98, ASCE 7-02 OR ASCE 7-05 130 MPH. 30' MEAN HEIGHT, ENCLOSED BUILDING, EXP. C, RESIDENTIAL, WIND TC DL=5 PSF, Kzt = 1.00

UNLESS SPECIFIED ON ENGINEER'S SEALED DESIGN, APPLY 1X4 "T"-BRACE, 80% LENGTH OF WEB, VALLEY WEB, SAME SPECIES AND GRADE OR BETTER, ATTACHED WITH 8d BOX (0.113" X 2.5") NAILS AT 6" O.C., OR CONTINUOUS LATERAL BRACING, EQUALLY SPACED, FOR VERTICAL VALLEY WEBS GREATER THAN 7'-9".

FOR VERTICALS OVER 10'-0" TALL, APPLY (2) 1x4 "T" BRACE, TO NARROW FACE, SAME GRADE AS WEB MEMBER, ATTACH WITH 8d OR 0.128"x3" GUN NAILS @6" O.C., STAGGERED

TOP CHORD OF TRUSS BENEATH VALLEY SET MUST BE BRACED WITH:
PROPERLY ATTACHED, RATED SHEATHING APPLIED PRIOR TO VALLEY TRUSS INSTALLATION
OR
PURLINS AT 24" O.C. OR AS OTHERWISE SPECIFIED ON ENGINEER'S SEALED DESIGN
OR
BY VALLEY TRUSSES USED IN LIEU OF PURLIN SPACING AS SPECIFIED ON ENGINEER'S SEALED DESIGN.

*** NOTE THAT THE PURLIN SPACING FOR BRACING THE TOP CHORD OF THE TRUSS BENEATH THE VALLEY IS MEASURED ALONG THE SLOPE OF THE TOP CHORD.

++ LARGER SPANS MAY BE BUILT AS LONG AS THE VERTICAL HEIGHT DOES NOT EXCEED 14'-0".

BOTTOM CHORD MAY BE SQUARE OR PITCHED CUT AS SHOWN.

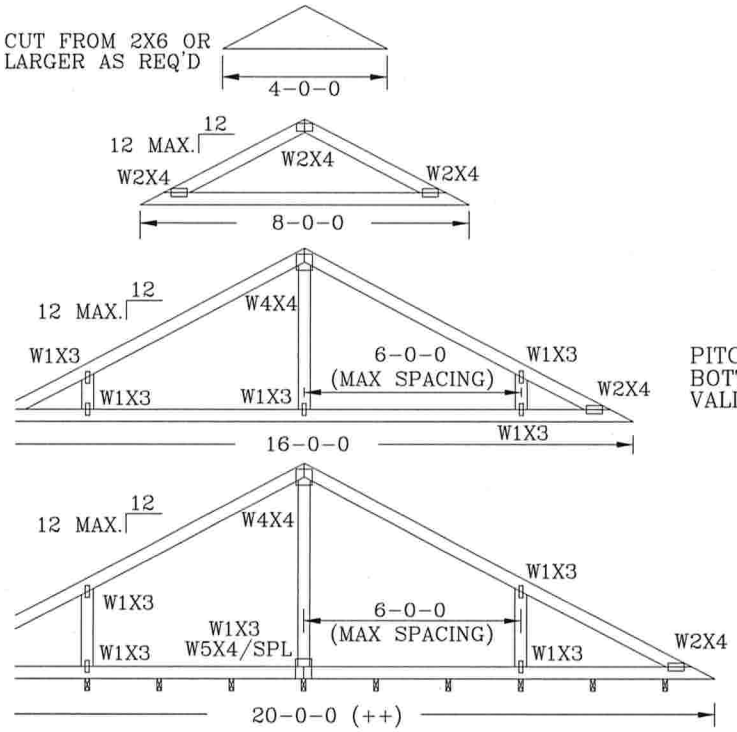

SUPPORTING TRUSSES AT 24" O.C. MAXIMUM SPACING.

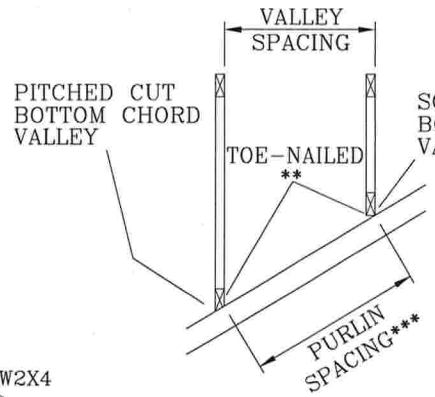

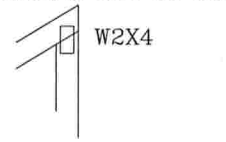

SQUARE CUT BOTTOM CHORD VALLEY

STUBBED VALLEY END DETAIL

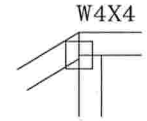

OPTIONAL HIP JOINT DETAIL

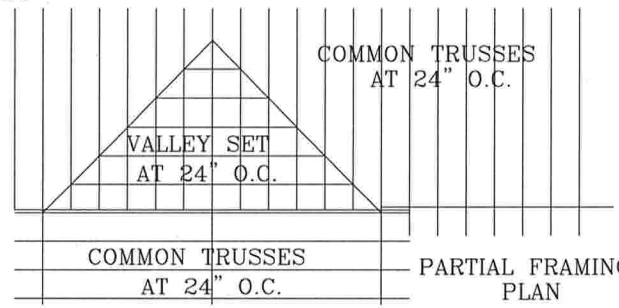

PARTIAL FRAMING PLAN

TW Building Components Group Inc.
Earth City, MO 63045

WARNING READ AND FOLLOW ALL NOTES ON THIS SHEET!
Trusses require extreme care in fabricating, handling, shipping, installing and bracing. Refer to and follow BCSI (Building Component Safety Information, by TPI and WTCA) for safety practices prior to performing these functions. Installers shall provide temporary bracing per BCSI. Unless noted otherwise, top chord shall have properly attached structural panels and bottom chord shall have a properly attached rigid ceiling. Locations shown for permanent lateral restraint of webs shall have bracing installed per BCSI sections B3 & B7. See this job's general notes page for more information.

IMPORTANT FURNISH COPY OF THIS DESIGN TO INSTALLATION CONTRACTOR.
ITW Building Components Group Inc. (ITWBCG) shall not be responsible for any deviation from this design, any failure to build the truss in conformance with TPI, or fabricating, handling, shipping, installing & bracing of trusses. ITWBCG connector plates are made of 20/18/16GA (W,H/S/K) ASTM A653 grade 37/40,50 (K/W/H,S) galv. steel. Apply plates to each face of truss, positioned as shown above and on Joint Details. A seal on this drawing or cover page indicates acceptance and professional engineering responsibility solely for the truss component design shown. The suitability and use of this component for any building is the responsibility of the Building Designer per ANSI/TPI 1 Sec. 2.
ITW-BCG: www.itwbcg.com; TPI: www.tpinst.com; WTCA: www.sbcindustry.com; ICC: www.iccsafe.org

DOUGLAS FLEMING LICENSE No. 66648 STATE OF FLORIDA PROFESSIONAL ENGINEER
Mar 03 '09

TC LL	30	30	40	PSF
TC DL	20	15	7	PSF
BC DL	10	10	10	PSF
BC LL	0	0	0	PSF
TOT. LD.	60	55	57	PSF
DUR.FAC.	1.25/1.33	1.15	1.15	
SPACING		24"		

REF	VALLEY DETAIL
DATE	1/1/09
DRWG	VAL1300109

GABLE STUD REINFORCEMENT DETAIL

ASCE 7-05: 110 MPH WIND SPEED, 30' MEAN HEIGHT, ENCLOSED, I = 1.00, EXPOSURE C, Kzt = 1.00

MAX GABLE VERTICAL LENGTH

2X4 GABLE VERTICAL SPACING	SPECIES	BRACE GRADE	NO BRACES	(1) 1X4 "L" BRACE * GROUP A	(1) 1X4 "L" BRACE * GROUP B	(1) 2X4 "L" BRACE * GROUP A	(1) 2X4 "L" BRACE * GROUP B	(2) 2X4 "L" BRACE ** GROUP A	(2) 2X4 "L" BRACE ** GROUP B	(1) 2X6 "L" BRACE * GROUP A	(1) 2X6 "L" BRACE * GROUP B	(2) 2X6 "L" BRACE ** GROUP A	(2) 2X6 "L" BRACE ** GROUP B
24" O.C.	SPF HF	#1 / #2	3' 8"	6' 4"	6' 6"	7' 6"	7' 8"	8' 11"	9' 2"	11' 9"	12' 1"	14' 0"	14' 0"
		#3	3' 7"	5' 5"	5' 5"	7' 2"	7' 2"	8' 11"	8' 11"	11' 2"	11' 2"	14' 0"	14' 0"
		STUD	3' 7"	5' 5"	5' 5"	7' 1"	7' 1"	8' 11"	8' 11"	11' 1"	11' 1"	14' 0"	14' 0"
		STANDARD	3' 7"	4' 8"	4' 8"	6' 1"	6' 1"	8' 3"	8' 3"	9' 6"	9' 6"	12' 11"	12' 11"
	SP DFL	#1	4' 0"	6' 4"	6' 10"	7' 6"	8' 1"	8' 11"	9' 7"	11' 9"	12' 8"	14' 0"	14' 0"
		#2	3' 11"	6' 4"	6' 10"	7' 6"	8' 1"	8' 11"	9' 7"	11' 9"	12' 8"	14' 0"	14' 0"
		#3	3' 9"	5' 7"	5' 7"	7' 4"	7' 4"	8' 11"	9' 5"	11' 5"	11' 5"	14' 0"	14' 0"
		STUD	3' 9"	5' 6"	5' 6"	7' 3"	7' 3"	8' 11"	9' 5"	11' 4"	11' 4"	14' 0"	14' 0"
		STANDARD	3' 8"	4' 9"	4' 9"	6' 3"	6' 3"	8' 5"	8' 5"	9' 9"	9' 9"	13' 3"	14' 0"
16" O.C.	SPF HF	#1 / #2	4' 2"	7' 3"	7' 5"	8' 7"	8' 10"	10' 3"	10' 6"	13' 5"	13' 10"	14' 0"	14' 0"
		#3	4' 1"	6' 8"	6' 8"	8' 7"	8' 7"	10' 3"	10' 3"	13' 5"	13' 5"	14' 0"	14' 0"
		STUD	4' 1"	8' 0"	8' 0"	8' 7"	8' 7"	10' 3"	10' 3"	13' 5"	13' 5"	14' 0"	14' 0"
		STANDARD	4' 1"	5' 8"	5' 8"	7' 6"	7' 6"	10' 1"	10' 1"	11' 8"	11' 8"	14' 0"	14' 0"
	SP DFL	#1	4' 7"	7' 3"	7' 9"	8' 7"	9' 3"	10' 3"	11' 0"	13' 5"	14' 0"	14' 0"	14' 0"
		#2	4' 6"	7' 3"	7' 9"	8' 7"	9' 3"	10' 3"	11' 0"	13' 5"	14' 0"	14' 0"	14' 0"
		#3	4' 4"	6' 10"	6' 10"	8' 7"	9' 0"	10' 3"	10' 9"	13' 5"	14' 0"	14' 0"	14' 0"
		STUD	4' 4"	6' 9"	6' 9"	8' 7"	8' 11"	10' 3"	10' 9"	13' 5"	14' 0"	14' 0"	14' 0"
		STANDARD	4' 2"	5' 10"	5' 10"	7' 8"	7' 8"	10' 3"	10' 4"	11' 11"	11' 11"	14' 0"	14' 0"
12" O.C.	SPF HF	#1 / #2	4' 7"	8' 0"	8' 2"	9' 5"	9' 8"	11' 3"	11' 7"	14' 0"	14' 0"	14' 0"	14' 0"
		#3	4' 6"	7' 8"	7' 8"	9' 5"	9' 5"	11' 3"	11' 3"	14' 0"	14' 0"	14' 0"	14' 0"
		STUD	4' 6"	7' 8"	7' 8"	9' 5"	9' 5"	11' 3"	11' 3"	14' 0"	14' 0"	14' 0"	14' 0"
		STANDARD	4' 6"	6' 7"	6' 7"	8' 8"	8' 8"	11' 3"	11' 3"	13' 6"	13' 6"	14' 0"	14' 0"
	SP DFL	#1	5' 1"	8' 0"	8' 7"	9' 5"	10' 2"	11' 3"	12' 1"	14' 0"	14' 0"	14' 0"	14' 0"
		#2	4' 11"	8' 0"	8' 7"	9' 5"	10' 2"	11' 3"	12' 1"	14' 0"	14' 0"	14' 0"	14' 0"
		#3	4' 9"	7' 11"	7' 11"	9' 5"	9' 11"	11' 3"	11' 10"	14' 0"	14' 0"	14' 0"	14' 0"
		STUD	4' 9"	7' 9"	7' 9"	9' 5"	9' 11"	11' 3"	11' 10"	14' 0"	14' 0"	14' 0"	14' 0"
		STANDARD	4' 7"	6' 9"	6' 9"	8' 10"	8' 10"	11' 3"	11' 7"	13' 10"	13' 10"	14' 0"	14' 0"

BRACING GROUP SPECIES AND GRADES:

GROUP A:

SPRUCE-PINE-FIR

#1 / #2	STANDARD
#3	STUD

HEM-FIR

#2	STUD
#3	STANDARD

DOUGLAS FIR-LARCH

#3
STUD
STANDARD

SOUTHERN PINE

#3
STUD
STANDARD

GROUP B:

HEM-FIR

#1 & BTR
#1

SOUTHERN PINE

#1
#2

DOUGLAS FIR-LARCH

#1
#2

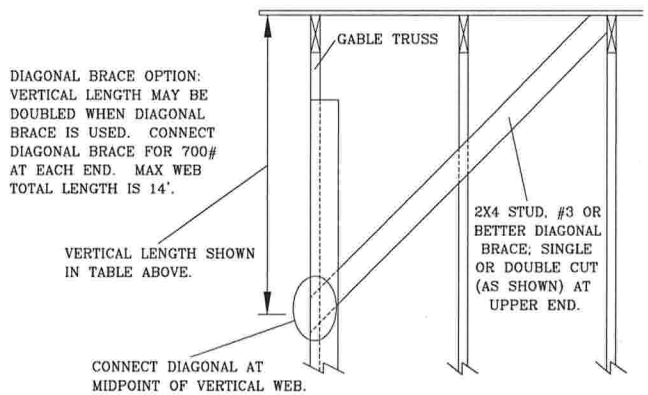

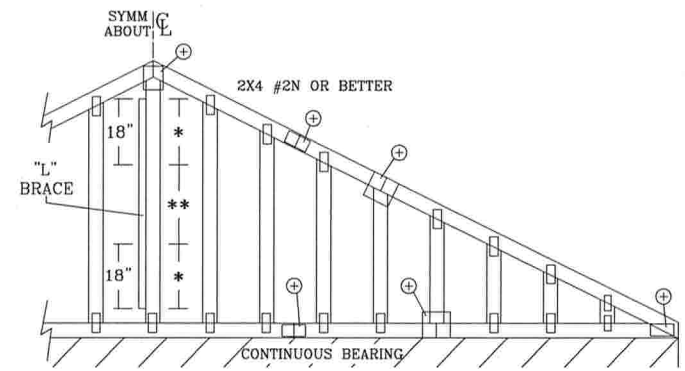

REFER TO CHART ABOVE FOR MAX GABLE VERTICAL LENGTH.

GABLE TRUSS DETAIL NOTES:

LIVE LOAD DEFLECTION CRITERIA IS L/240.

PROVIDE UPLIFT CONNECTIONS FOR 100 PLF OVER CONTINUOUS BEARING (5 PSF TC DEAD LOAD).

GABLE END SUPPORTS LOAD FROM 4' 0" OUTLOOKERS WITH 2' 0" OVERHANG, OR 12" PLYWOOD OVERHANG.

ATTACH EACH "L" BRACE WITH 10d NAILS. (0.128"x3" min)

* FOR (1) "L" BRACE: SPACE NAILS AT 2" O.C. IN 18" END ZONES AND 4" O.C. BETWEEN ZONES.

** FOR (2) "L" BRACES: SPACE NAILS AT 3" O.C. IN 18" END ZONES AND 6" O.C. BETWEEN ZONES.

"L" BRACING MUST BE A MINIMUM OF 80% OF WEB MEMBER LENGTH.

GABLE VERTICAL PLATE SIZES

VERTICAL LENGTH	NO SPLICE
LESS THAN 4' 0"	1X4 OR 2X3
GREATER THAN 4' 0", BUT LESS THAN 11' 6"	2.5X4
GREATER THAN 11' 6"	3X4

\+ REFER TO COMMON TRUSS DESIGN FOR PEAK, SPLICE, AND HEEL PLATES.

ITW Building Components Group Inc.

Earth City, MO 63045

WARNING READ AND FOLLOW ALL NOTES ON THIS SHEET!
Trusses require extreme care in fabricating, handling, shipping, installing and bracing. Refer to and follow BCSI (Building Component Safety Information, by TPI and WTCA) for safety practices prior to performing these functions. Installers shall provide temporary bracing per BCSI. Unless noted otherwise, top chord shall have properly attached structural panels and bottom chord shall have a properly attached rigid ceiling. Locations shown for permanent lateral restraint of webs shall have bracing installed per BCSI sections B3 & B7. See this job's general notes page for more information.

IMPORTANT FURNISH COPY OF THIS DESIGN TO INSTALLATION CONTRACTOR.
ITW Building Components Group Inc. (ITWBCG) shall not be responsible for any deviation from this design, any failure to build the truss in conformance with TPI, or fabricating, handling, shipping, installing & bracing of trusses. ITWBCG connector plates are made of 20/18/16GA (W,H/S/K) ASTM A653 grade 37/40/60 (K/W/H,S) galv. steel. Apply plates to each face of truss, positioned as shown above and on Joint Details. A seal on this drawing or cover page indicates acceptance and professional engineering responsibility solely for the truss component design shown. The suitability and use of this component for any building is the responsibility of the Building Designer per ANST/TPI 1 Sec. 2.
ITW-BCG: www.itwbcg.com; TPI: www.tpinst.com; WTCA: www.sbcindustry.com; ICC: www.iccsafe.org

Mar 03 '09

DOUGLAS FLEMING LICENSE No. 66648 STATE OF FLORIDA PROFESSIONAL ENGINEER

MAX. TOT. LD. 60 PSF

MAX. SPACING 24.0"

REF	ASCE7-05-GAB11030
DATE	1/1/09
DRWG	A11030050109

GABLE DETAIL
FOR LET-IN VERTICALS

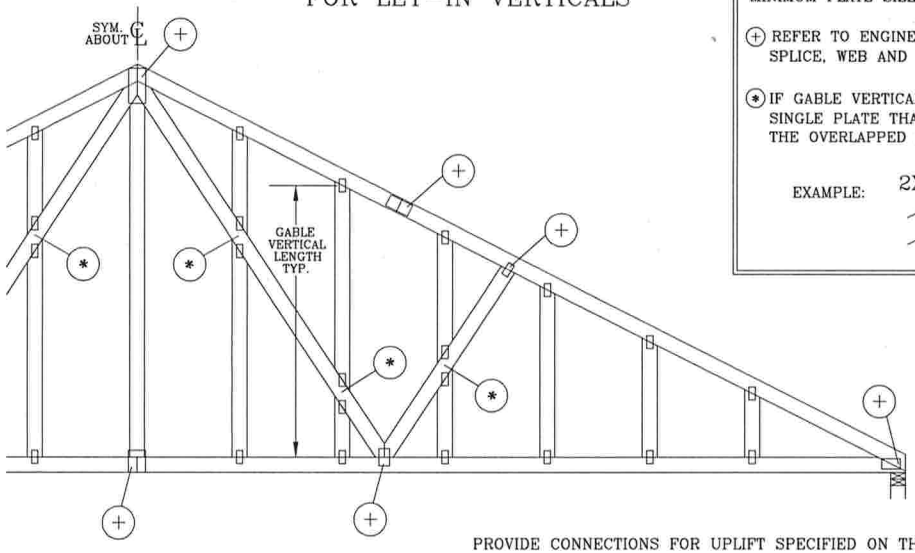

GABLE TRUSS PLATE SIZES

REFER TO APPROPRIATE ITW GABLE DETAIL FOR MINIMUM PLATE SIZES FOR VERTICAL STUDS.

(+) REFER TO ENGINEERED TRUSS DESIGN FOR PEAK, SPLICE, WEB AND HEEL PLATES.

(*) IF GABLE VERTICAL PLATES OVERLAP, USE A SINGLE PLATE THAT COVERS THE TOTAL AREA OF THE OVERLAPPED PLATES TO SPAN THE WEB.

EXAMPLE:

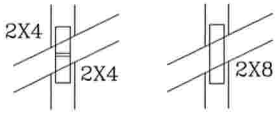

"T" REINFORCEMENT ATTACHMENT DETAIL

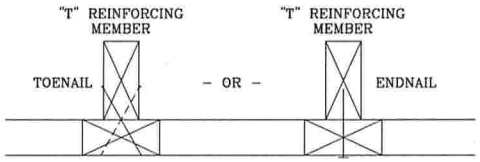

TO CONVERT FROM "L" TO "T" REINFORCING MEMBERS, MULTIPLY "T" INCREASE BY LENGTH (BASED ON APPROPRIATE ITW GABLE DETAIL).

MAXIMUM ALLOWABLE "T" REINFORCED GABLE VERTICAL LENGTH IS 14' FROM TOP TO BOTTOM CHORD.

WEB LENGTH INCREASE W/ "T" BRACE

WIND SPEED AND MRH	"T" REINF. MBR. SIZE	"T' INCREASE
140 MPH	2x4	10 %
15 FT	2x6	50 %
140 MPH	2x4	10 %
30 FT	2x6	50 %
130 MPH	2x4	10 %
15 FT	2x6	50 %
130 MPH	2x4	10 %
30 FT	2x6	50 %
120 MPH	2x4	10 %
15 FT	2x6	50 %
120 MPH	2x4	10 %
30 FT	2x6	40 %
110 MPH	2x4	10 %
15 FT	2x6	40 %
110 MPH	2x4	10 %
30 FT	2x6	50 %
100 MPH	2x4	20 %
15 FT	2x6	30 %
100 MPH	2x4	10 %
30 FT	2x6	40 %
90 MPH	2x4	20 %
15 FT	2x6	20 %
90 MPH	2x4	20 %
30 FT	2x6	30 %

EXAMPLE:
ASCE WIND SPEED = 100 MPH
MEAN ROOF HEIGHT = 30 FT, Kzt = 1.00
GABLE VERTICAL = 24" O.C. SP #3
"T" REINFORCING MEMBER SIZE = 2X4
"T" BRACE INCREASE (FROM ABOVE) = 10% = 1.10
(1) 2X4 "L" BRACE LENGTH = 6' 7"
MAXIMUM "T" REINFORCED GABLE VERTICAL LENGTH
1.10 x 6' 7" = 7' 3"

PROVIDE CONNECTIONS FOR UPLIFT SPECIFIED ON THE ENGINEERED TRUSS DESIGN.

ATTACH EACH "T" REINFORCING MEMBER WITH
END DRIVEN NAILS:
10d COMMON (0.148"X 3.",MIN) NAILS AT 4" O.C. PLUS
(4) NAILS IN TOP AND BOTTOM CHORD.

TOENAILED NAILS:
10d COMMON (0.148"x3",MIN) TOENAILS AT 4" O.C. PLUS
(4) TOENAILS IN TOP AND BOTTOM CHORD.

THIS DETAIL TO BE USED WITH THE APPROPRIATE ITW GABLE DETAIL FOR ASCE WIND LOAD.
ASCE 7-98 GABLE DETAIL DRAWINGS
A13015980109, A12015980109, A11015980109, A10015980109,
A13030980109, A12030980109, A11030980109, A10030980109
ASCE 7-02 GABLE DETAIL DRAWINGS
A13015020109, A12015020109, A11015020109, A10015020109, A14015020109,
A13030020109, A12030020109, A11030020109, A10030020109, A14030020109
ASCE 7-05 GABLE DETAIL DRAWINGS
A13015050109, A12015050109, A11015050109, A10015050109, A14015050109,
A13030050109, A12030050109, A11030050109, A10030050109, A14030050109

SEE APPROPRIATE ITW GABLE DETAIL FOR MAXIMUM UNREINFORCED GABLE VERTICAL LENGTH.

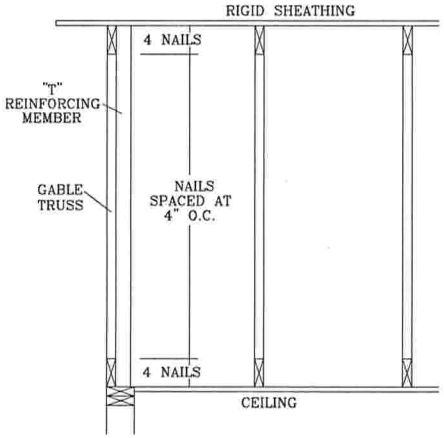

ITW Building Components Group Inc.

Earth City, MO 63045

WARNING READ AND FOLLOW ALL NOTES ON THIS SHEET!
Trusses require extreme care in fabricating, handling, shipping, installing and bracing. Refer to and follow BCSI (Building Component Safety Information, by TPI and WTCA) for safety practices prior to performing these functions. Installers shall provide temporary bracing per BCSI. Unless noted otherwise, top chord shall have properly attached structural panels and bottom chord shall have a properly attached rigid ceiling. Locations shown for permanent lateral restraint of webs shall have bracing installed per BCSI sections B3 & B7. See this job's general notes page for more information.

IMPORTANT FURNISH COPY OF THIS DESIGN TO INSTALLATION CONTRACTOR.
ITW Building Components Group Inc. (ITWBCG) shall not be responsible for any deviation from this design, any failure to build the truss in conformance with TPI, or fabricating, handling, shipping, installing & bracing of trusses. ITWBCG connector plates are made of 20/18/16GA (W,H/S/K) ASTM A653 grade 37/40/60 (K/W/H,S) galv. steel. Apply plates to each face of truss, positioned as shown above and on Joint Details. A seal on this drawing or cover page indicates acceptance and professional engineering responsibility solely for the truss component design shown. The suitability and use of this component for any building is the responsibility of the Building Designer per ANST/TPI 1 Sec. 2.
ITW-BCG: www.itwbcg.com; TPI: www.tpinst.com; WTCA: www.sbcindustry.com; ICC: www.iccsafe.org

DOUGLAS FLEMING LICENSE No. 66648 STATE OF FLORIDA PROFESSIONAL ENGINEER
Jan 03 '09

MAX TOT. LD. 60 PSF
DUR. FAC. ANY
MAX SPACING 24.0"

REF	LET-IN VERT
DATE	1/1/09
DRWG	GBLLETIN0109

GABLE STUD REINFORCEMENT DETAIL

ASCE 7-05: 110 MPH WIND SPEED, 15' MEAN HEIGHT, ENCLOSED, I = 1.00, EXPOSURE C, Kzt = 1.00

MAX GABLE VERTICAL LENGTH

2X4 GABLE VERTICAL SPACING	SPECIES	GRADE \ BRACE	NO BRACES	(1) 1X4 "L" BRACE * GROUP A	(1) 1X4 "L" BRACE * GROUP B	(1) 2X4 "L" BRACE * GROUP A	(1) 2X4 "L" BRACE * GROUP B	(2) 2X4 "L" BRACE ** GROUP A	(2) 2X4 "L" BRACE ** GROUP B	(1) 2X6 "L" BRACE * GROUP A	(1) 2X6 "L" BRACE * GROUP B	(2) 2X6 "L" BRACE ** GROUP A	(2) 2X6 "L" BRACE ** GROUP B
24" O.C.	SPF HF	#1 / #2	3' 10"	6' 8"	6' 10"	7' 11"	8' 1"	9' 5"	9' 8"	12' 5"	12' 9"	14' 0"	14' 0"
		#3	3' 9"	6' 0"	6' 0"	7' 11"	7' 11"	9' 5"	9' 5"	12' 4"	12' 4"	14' 0"	14' 0"
		STUD	3' 9"	6' 0"	6' 0"	7' 11"	7' 11"	9' 5"	9' 5"	12' 3"	12' 3"	14' 0"	14' 0"
		STANDARD	3' 9"	5' 2"	5' 2"	6' 9"	6' 9"	9' 1"	9' 1"	10' 7"	10' 7"	14' 0"	14' 0"
	SP DFL	#1	4' 3"	6' 8"	7' 2"	7' 11"	8' 6"	9' 5"	10' 2"	12' 5"	13' 5"	14' 0"	14' 0"
		#2	4' 2"	6' 8"	7' 2"	7' 11"	8' 6"	9' 5"	10' 2"	12' 5"	13' 5"	14' 0"	14' 0"
		#3	4' 0"	6' 2"	6' 2"	7' 11"	8' 1"	9' 5"	9' 11"	12' 5"	12' 8"	14' 0"	14' 0"
		STUD	4' 0"	6' 1"	6' 1"	7' 11"	8' 0"	9' 5"	9' 11"	12' 5"	12' 6"	14' 0"	14' 0"
		STANDARD	3' 10"	5' 3"	5' 3"	6' 11"	6' 11"	9' 4"	9' 4"	10' 10"	10' 10"	14' 0"	14' 0"
16" O.C.	SPF HF	#1 / #2	4' 5"	7' 8"	7' 10"	9' 1"	9' 4"	10' 10"	11' 1"	14' 0"	14' 0"	14' 0"	14' 0"
		#3	4' 4"	7' 4"	7' 4"	9' 1"	9' 1"	10' 10"	10' 10"	14' 0"	14' 0"	14' 0"	14' 0"
		STUD	4' 4"	7' 4"	7' 4"	9' 1"	9' 1"	10' 10"	10' 10"	14' 0"	14' 0"	14' 0"	14' 0"
		STANDARD	4' 4"	6' 4"	6' 4"	8' 4"	8' 4"	10' 10"	10' 10"	12' 11"	12' 11"	14' 0"	14' 0"
	SP DFL	#1	4' 10"	7' 8"	8' 3"	9' 1"	9' 9"	10' 10"	11' 8"	14' 0"	14' 0"	14' 0"	14' 0"
		#2	4' 9"	7' 8"	8' 3"	9' 1"	9' 9"	10' 10"	11' 8"	14' 0"	14' 0"	14' 0"	14' 0"
		#3	4' 6"	7' 7"	7' 7"	9' 1"	9' 6"	10' 10"	11' 4"	14' 0"	14' 0"	14' 0"	14' 0"
		STUD	4' 6"	7' 6"	7' 6"	9' 1"	9' 6"	10' 10"	11' 4"	14' 0"	14' 0"	14' 0"	14' 0"
		STANDARD	4' 5"	6' 5"	6' 5"	8' 6"	8' 6"	10' 10"	11' 1"	13' 3"	13' 3"	14' 0"	14' 0"
12" O.C.	SPF HF	#1 / #2	4' 11"	8' 5"	8' 8"	10' 0"	10' 3"	11' 11"	12' 3"	14' 0"	14' 0"	14' 0"	14' 0"
		#3	4' 9"	8' 5"	8' 5"	10' 0"	10' 0"	11' 11"	11' 11"	14' 0"	14' 0"	14' 0"	14' 0"
		STUD	4' 9"	8' 5"	8' 5"	10' 0"	10' 0"	11' 11"	11' 11"	14' 0"	14' 0"	14' 0"	14' 0"
		STANDARD	4' 9"	7' 3"	7' 3"	9' 7"	9' 7"	11' 11"	11' 11"	14' 0"	14' 0"	14' 0"	14' 0"
	SP DFL	#1	5' 4"	8' 5"	9' 1"	10' 0"	10' 9"	11' 11"	12' 10"	14' 0"	14' 0"	14' 0"	14' 0"
		#2	5' 3"	8' 5"	9' 1"	10' 0"	10' 9"	11' 11"	12' 10"	14' 0"	14' 0"	14' 0"	14' 0"
		#3	5' 0"	8' 5"	8' 5"	10' 0"	10' 6"	11' 11"	12' 6"	14' 0"	14' 0"	14' 0"	14' 0"
		STUD	5' 0"	8' 5"	8' 7"	10' 0"	10' 6"	11' 11"	12' 6"	14' 0"	14' 0"	14' 0"	14' 0"
		STANDARD	4' 11"	7' 5"	7' 5"	9' 10"	9' 10"	11' 11"	12' 3"	14' 0"	14' 0"	14' 0"	14' 0"

BRACING GROUP SPECIES AND GRADES:

GROUP A:

SPRUCE-PINE-FIR

#1 / #2	STANDARD
#3	STUD

HEM-FIR

#2	STUD
#3	STANDARD

DOUGLAS FIR-LARCH

#3
STUD
STANDARD

SOUTHERN PINE

#3
STUD
STANDARD

GROUP B:

HEM-FIR

#1 & BTR
#1

SOUTHERN PINE

#1
#2

DOUGLAS FIR-LARCH

#1
#2

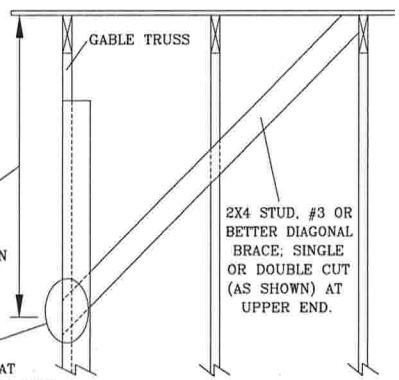

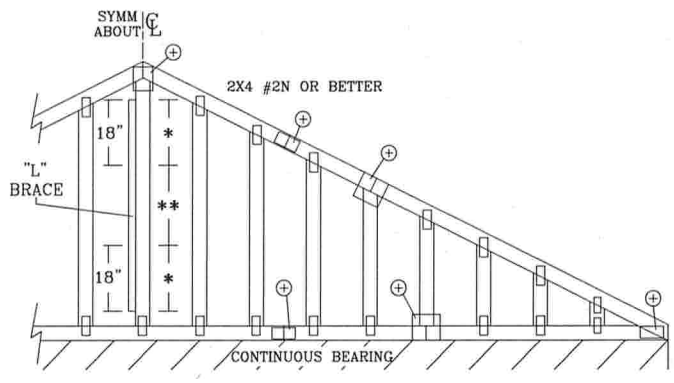

REFER TO CHART ABOVE FOR MAX GABLE VERTICAL LENGTH.

GABLE TRUSS DETAIL NOTES:

LIVE LOAD DEFLECTION CRITERIA IS L/240.

PROVIDE UPLIFT CONNECTIONS FOR 80 PLF OVER CONTINUOUS BEARING (5 PSF TC DEAD LOAD).

GABLE END SUPPORTS LOAD FROM 4' 0" OUTLOOKERS WITH 2' 0" OVERHANG, OR 12" PLYWOOD OVERHANG.

ATTACH EACH "L" BRACE WITH 10d NAILS. (0.128"x3" min)

* FOR (1) "L" BRACE: SPACE NAILS AT 2" O.C. IN 18" END ZONES AND 4" O.C. BETWEEN ZONES.

** FOR (2) "L" BRACES: SPACE NAILS AT 3" O.C. IN 18" END ZONES AND 6" O.C. BETWEEN ZONES.

"L" BRACING MUST BE A MINIMUM OF 80% OF WEB MEMBER LENGTH.

GABLE VERTICAL PLATE SIZES

VERTICAL LENGTH	NO SPLICE
LESS THAN 4' 0"	1X4 OR 2X3
GREATER THAN 4' 0", BUT LESS THAN 11' 6"	2.5X4
GREATER THAN 11' 6"	3X4

\+ REFER TO COMMON TRUSS DESIGN FOR PEAK, SPLICE, AND HEEL PLATES.

ITW Building Components Group Inc.

Earth City, MO 63045

WARNING READ AND FOLLOW ALL NOTES ON THIS SHEET!
Trusses require extreme care in fabricating, handling, shipping, installing and bracing. Refer to and follow BCSI (Building Component Safety Information, by TPI and WTCA) for safety practices prior to performing these functions. Installers shall provide temporary bracing per BCSI. Unless noted otherwise, top chord shall have properly attached structural panels and bottom chord shall have a properly attached rigid ceiling. Locations shown for permanent lateral restraint of webs shall have bracing installed per BCSI sections B3 & B7. See this job's general notes page for more information.

IMPORTANT FURNISH COPY OF THIS DESIGN TO INSTALLATION CONTRACTOR.
ITW Building Components Group Inc. (ITWBCG) shall not be responsible for any deviation from this design, any failure to build the truss in conformance with TPI, or fabricating, handling, shipping, installing & bracing of trusses. ITWBCG connector plates are made of 20/18/16GA (W,H/S/K) ASTM A653 grade 37/40/50 (K/W/H,S) galv. steel. Apply plates to each face of truss, positioned as shown above and on Joint Details. A seal on this drawing or cover page indicates acceptance and professional engineering responsibility solely for the truss component design shown. The suitability and use of this component for any building is the responsibility of the Building Designer per ANST/TPI 1 Sec. 2.
ITW-BCG: www.itwbcg.com; TPI: www.tpinst.com; WTCA: www.sbcindustry.com; ICC: www.iccsafe.org

DOUGLAS FLEMING LICENSE No. 66648 STATE OF FLORIDA PROFESSIONAL ENGINEER
Mar 03 '09

MAX. TOT. LD. 60 PSF

MAX. SPACING 24.0"

REF	ASCE7-05-GAB11015
DATE	1/1/09
DRWG	A11015050109

140 PIGGYBACK DETAIL

140 MPH WIND, 30.00 FT MEAN HGT, ASCE 7-02 OR ASCE 7-05, PARTIALLY ENCLOSED BLDG. LOCATED ANYWHERE IN ROOF, CAT II, EXP C, Kzt = 1.00, WIND DL= 5.0 PSF.

MAXIMUM TRUSS SPACING IS 24" O.C.
DETAIL IS NOT APPLICABLE IF CAP SUPPORTS ADDITIONAL LOADS SUCH AS CUPOLA, STEEPLE, CHIMNEY OR DRAG STRUT LOADS.

NOTE: TOP CHORDS OF TRUSSES SUPPORTING PIGGYBACK CAP TRUSSES MUST BE ADEQUATELY BRACED BY SHEATHING OR PURLINS. THE BUILDING ENGINEER OF RECORD SHALL PROVIDE DIAGONAL BRACING OR OTHER SUITABLE ANCHORAGE TO PERMANENTLY RESTRAIN PURLINS.

** REFER TO ENGINEER'S SEALED TRUSS DESIGN DRAWING FOR CAP TRUSS SPECIFICATIONS.

CAP TRUSS TOE NAILED TO TOP CHORD BRACING WITH (2) 16d BOX (0.135"x3.5") NAILS AND SECURED WITH 3X8 TRULOX PLATES (EACH FACE) AT EACH END AND AT 4' O.C. CIRCLED NUMBER INDICATES REQUIRED NUMBER OF 0.120" X 1.375" NAILS PER FACE. SEE DRAWING 160TL FOR TRULOX INFORMATION.

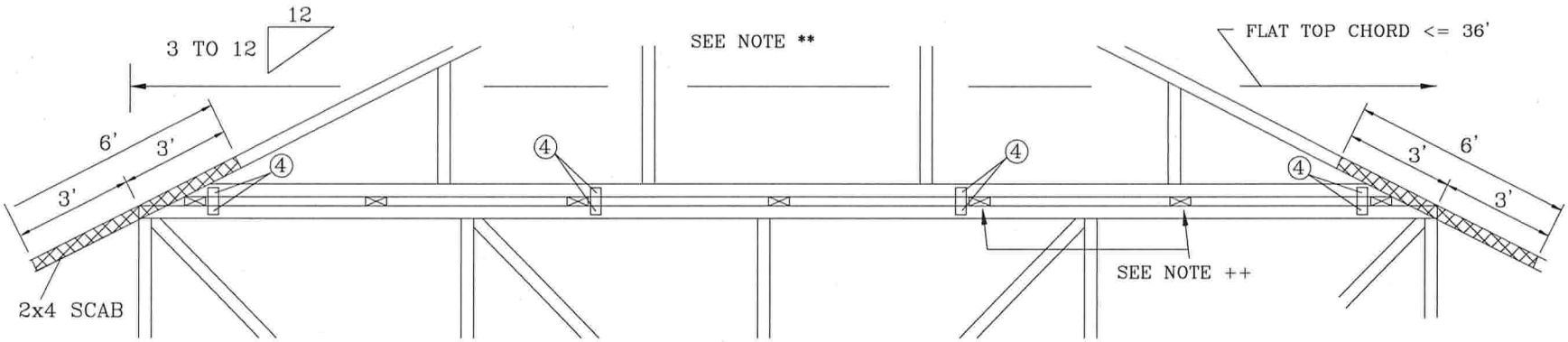

SECURE WITH 2X4 #3 GRADE SCAB (1 SIDE ONLY) AT EACH END. ATTACHED WITH 2 ROWS OF 10d (0.128"X3.0") NAILS AT 4" O.C.

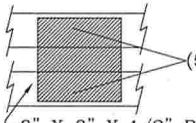

(5) 6d COMMON NAILS (0.113"x2")

8" X 8" X 1/2" RATED SHEATHING GUSSETS (EACH FACE) MAY BE USED IN LIEU OF TRULOX PLATES, ATTACH WITH (10) 6d COMMON (0.113"x2") NAILS PER GUSSET, (5) IN CAP BC AND (5) IN BASE TRUSS FLAT TC OR

OR

2x4 SPF #2 OR BETTER VERTICAL 12" SCABS @ 4' O.C. MAX STAGGERED 2' O.C. EACH FACE. ATTACH TO PIGGYBACK AND BASE TRUSS WITH (3) 10d (0.128"x3") NAILS.

++ FLAT TOP CHORD UNDER PIGGYBACK CAP SHALL BE LATERALLY BRACED AT A MAXIMUM OF 24" INTERVALS UNLESS OTHERWISE NOTED ON BASE TRUSS DESIGN DRAWING. ATTACH BRACING TO THE FLAT TOP CHORD USING (2) 16d NAILS (0.135" X 3.5")

ITW Building Components Group Inc.

Earth City, MO 63045

WARNING READ AND FOLLOW ALL NOTES ON THIS SHEET!
Trusses require extreme care in fabricating, handling, shipping, installing and bracing. Refer to and follow BCSI (Building Component Safety Information, by TPI and WTCA) for safety practices prior to performing these functions. Installers shall provide temporary bracing per BCSI. Unless noted otherwise, top chord shall have properly attached structural panels and bottom chord shall have a properly attached rigid ceiling. Locations shown for permanent lateral restraint of webs shall have bracing installed per BCSI sections B3 & B7. See this job's general notes page for more information.

IMPORTANT FURNISH COPY OF THIS DESIGN TO INSTALLATION CONTRACTOR.
ITW Building Components Group Inc. (ITWBCG) shall not be responsible for any deviation from this design, any failure to build the truss in conformance with TPI, or fabricating, handling, shipping, installing & bracing of trusses. ITWBCG connector plates are made of 20/18/16GA (W,H/S/K) ASTM A653 grade 37/40/60 (K/W/H,S) galv. steel. Apply plates to each face of truss, positioned as shown above and on Joint Details. A seal on this drawing or cover page indicates acceptance and professional engineering responsibility solely for the truss component design shown. The suitability and use of this component for any building is the responsibility of the Building Designer per ANST/TPI 1 Sec. 2.
ITW-BCG: www.itwbcg.com; TPI: www.tpinst.com; WTCA: www.sbcindustry.com; ICC: www.iccsafe.org

DOUGLAS FLEMING LICENSE No. 66648 03 '09 STATE OF FLORIDA PROFESSIONAL ENGINEER

SPACING 24.0"

REF	PIGGYBACK
DATE	1/1/09
DRWG	PB140109

CERTIFICATE OF

OCCUPANCY

COLUMBIA COUNTY, FLORIDA

Department of Building and Zoning Inspection

This Certificate of Occupancy is issued to the below named permit holder for the building and premises at the below named location, and certifies that the work has been completed in accordance with the Columbia County Building Code.

Parcel Number 06-7S-16-04145-103 **Building permit No.** 000027755

Use Classification SFD,UTILITY **Fire:** 0.00

Permit Holder TRAVIS WILLIAMS **Waste:** 0.00

Owner of Building DANIELLA FAZZINO **Total:** 0.00

Location: 913 SW COLES CT., FT. WHITE, FL

Date: 07/16/2009

Harry Dicks

Building Inspector

POST IN A CONSPICUOUS PLACE
(Business Places Only)