DATE 11/30/2005

Columbia County Building Permit

This Permit Expires One Year From the Date of Issue

PERMIT
000023914

APPLICANT SUSAN FAIR PHONE 752-1711

ADDRESS 180 NW AMENITY COURT LAKE CITY FL 32055

OWNER CORNERSTONE DEVELOPERS PHONE 752-1711

ADDRESS 196 SW TIMBERLAND COURT LAKE CITY FL 32055

CONTRACTOR BRYAN ZECHER PHONE 752-8653

LOCATION OF PROPERTY 90W, TL ON HEATHRIDGE COURT, TR ON TIMBERLAND COURT, 4TH LOT ON RIGHT

TYPE DEVELOPMENT SFD,UTILITY ESTIMATED COST OF CONSTRUCTION 75000.00

HEATED FLOOR AREA 1500.00 TOTAL AREA 1974.00 HEIGHT .00 STORIES 1

FOUNDATION CONC WALLS FRAMED ROOF PITCH 6/12 FLOOR SLAB

LAND USE & ZONING RSF-2 MAX. HEIGHT 18

Minimum Set Back Requirments: STREET-FRONT 25.00 REAR 15.00 SIDE 10.00

NO. EX.D.U. 0 FLOOD ZONE X PP DEVELOPMENT PERMIT NO.

PARCEL ID 33-3S-16-02438-194 SUBDIVISION EMERALD COVE

LOT 94 BLOCK PHASE UNIT TOTAL ACRES .50

000000902		CBC054575	Susan Fair
Culvert Permit No.	Culvert Waiver	Contractor's License Number	Applicant/Owner/Contractor

CULVERT	05-1128-N	BK	JH	Y
Driveway Connection	Septic Tank Number	LU & Zoning checked by	Approved for Issuance	New Resident

COMMENTS: ONE FOOT ABOVE THE ROAD,

Check # or Cash 1257

FOR BUILDING & ZONING DEPARTMENT ONLY

(footer/Slab)

Temporary Power _____ date/app. by Foundation _____ date/app. by Monolithic _____ date/app. by

Under slab rough-in plumbing _____ date/app. by Slab _____ date/app. by Sheathing/Nailing _____ date/app. by

Framing _____ date/app. by Rough-in plumbing above slab and below wood floor _____ date/app. by

Electrical rough-in _____ date/app. by Heat & Air Duct _____ date/app. by Peri. beam (Lintel) _____ date/app. by

Permanent power _____ date/app. by C.O. Final _____ date/app. by Culvert _____ date/app. by

M/H tie downs, blocking, electricity and plumbing _____ date/app. by Pool _____ date/app. by

Reconnection _____ date/app. by Pump pole _____ date/app. by Utility Pole _____ date/app. by

M/H Pole _____ date/app. by Travel Trailer _____ date/app. by Re-roof _____ date/app. by

BUILDING PERMIT FEE $ 375.00 CERTIFICATION FEE $ 9.87 SURCHARGE FEE $ 9.87

MISC. FEES $ .00 ZONING CERT. FEE $ 50.00 FIRE FEE $ .00 WASTE FEE $

FLOOD DEVELOPMENT FEE $ FLOOD ZONE FEE $ 25.00 CULVERT FEE $ 25.00 **TOTAL FEE** 494.74

INSPECTORS OFFICE _____ CLERKS OFFICE CH

NOTICE: IN ADDITION TO THE REQUIREMENTS OF THIS PERMIT, THERE MAY BE ADDITIONAL RESTRICTIONS APPLICABLE TO THIS PROPERTY THAT MAY BE FOUND IN THE PUBLIC RECORDS OF THIS COUNTY. AND THERE MAY BE ADDITIONAL PERMITS REQUIRED FROM OTHER GOVERNMENTAL ENTITIES SUCH AS WATER MANAGEMENT DISTRICTS, STATE AGENCIES, OR FEDERAL AGENCIES.

"WARNING TO OWNER: YOUR FAILURE TO RECORD A NOTICE OF COMMENCEMENT MAY RESULT IN YOUR PAYING TWICE FOR IMPROVEMENTS TO YOUR PROPERTY. IF YOU INTEND TO OBTAIN FINANCING, CONSULT WITH YOUR LENDER OR AN ATTORNEY BEFORE RECORDING YOUR NOTICE OF COMMENCEMENT."

This Permit Must Be Prominently Posted on Premises During Construction

PLEASE NOTIFY THE COLUMBIA COUNTY BUILDING DEPARTMENT AT LEAST 24 HOURS IN ADVANCE OF EACH INSPECTION, IN ORDER THAT IT MAY BE MADE WITHOUT DELAY OR INCONVIENCE, PHONE 758-1008. THIS PERMIT IS NOT VALID UNLESS THE WORK AUTHORIZED BY IT IS COMMENCED WITHIN 6 MONTHS AFTER ISSUANCE.

The Issuance of this Permit Does Not Waive Compliance by Permittee with Deed Restrictions.

Columbia County Building Permit Application

Revised 9-23-04

For Office Use Only Application # 0511-67 Date Received 11/17/05 By G Permit # 902/23914
Application Approved by - Zoning Official BLK Date 21.11.05 Plans Examiner OK JTH Date 11-21-05
Flood Zone X Per Plat Development Permit N/A Zoning RSF-2 Land Use Plan Map Category Res. Low Den.
Comments ~~Cn. Affidavit Plan~~ ~ NOC

Applicants Name ~~CHRIS COX~~ SUSAN FAIR 180 NW Ameily Ct. 32055 Phone 386-867-0633
Address ~~252 NW IVY GLEN~~ LAKE CITY FL
Owners Name Cornerstone Developers, LLC. Phone 752.1711
911 Address 196 SW Timberlant CT LAKE CITY FL
Contractors Name Bryan Zecher Construction Phone 752-8653
Address PO Box 815 Lake City, FL 32056
Fee Simple Owner Name & Address Cornerstone Developers, LLC.
Bonding Co. Name & Address NA
Architect/Engineer Name & Address MARK DISOSWAY PO BOX 868 LAKE CITY FL 32056
Mortgage Lenders Name & Address NA

Circle the correct power company - FL Power & Light - Clay Elec. - Suwannee Valley Elec. - Progressive Energy
Property ID Number 33-3S-16-07138-194 Estimated Cost of Construction 60,000.00
Subdivision Name Emerald Cove Lot 94 Block ___ Unit ___ Phase 1
Driving Directions Take Hwy 90 W - go two miles past I-75 - subdivision is on the left. (SEE ATTATCHED EXHIBIT A)
TL Heathridge Ct, TR Timberland Ct, 4th lot right

Type of Construction Frame + Brick Number of Existing Dwellings on Property Ø
Total Acreage 1/2 ACRE Lot Size .50 ACRES Do you need a Culvert Permit or Culvert Waiver or Have an Existing Drive
Actual Distance of Structure from Property Lines - Front 27' Side 50' Side 50' Rear 64'
Total Building Height 18'-9" Number of Stories 1 Heated Floor Area 1700 sqft Roof Pitch 6/12
Porch 44 CARAGE 430 TOTAL 1974

Application is hereby made to obtain a permit to do work and installations as indicated. I certify that no work or installation has commenced prior to the issuance of a permit and that all work be performed to meet the standards of all laws regulating construction in this jurisdiction.

OWNERS AFFIDAVIT: I hereby certify that all the foregoing information is accurate and all work will be done in compliance with all applicable laws and regulating construction and zoning.

WARNING TO OWNER: YOUR FAILURE TO RECORD A NOTICE OF COMMENCMENT MAY RESULT IN YOU PAYING TWICE FOR IMPROVEMENTS TO YOUR PROPERTY. IF YOU INTEND TO OBTAIN FINANCING, CONSULT WITH YOUR LENDER OR ATTORNEY BEFORE RECORDING YOUR NOTICE OF COMMENCEMENT.

Owner Builder ~~or Agent (Including Contractor)~~ Contractor Signature
Contractors License Number CBC054575
Competency Card Number
NOTARY STAMP/SEAL

SUSAN ANN FAIR
MY COMMISSION # DD 342845
EXPIRES: August 14, 2008
Bonded Thru Notary Public Underwriters

STATE OF FLORIDA
COUNTY OF COLUMBIA

Sworn to (or affirmed) and subscribed before me
this 17 day of November 2005.
Personally known ✓ or Produced Identification ___

Notary Signature

Called Chris 11-22-05

PREPARED BY AND RETURN TO:

TERRY McDAVID
POST OFFICE BOX 1328
LAKE CITY, FL 32056-1328

Inst:2005026450 Date:10/24/2005 Time:13:06
Doc Stamp-Deed : 3628.80
DC,P.DeWitt Cason,Columbia County B:1062 P:2214

Property Appraiser's Identification Number 02435-000 02421-000

TM File No: 05-652

WARRANTY DEED

This Warranty Deed, made this 18th day of October, 2005, BETWEEN D D P CORPORATION, a Florida corporation, whose post office address is 4158 US Highway 90 West, Lake City, Florida 32055, of the County of Columbia, State of Florida, grantor, and CORNERSTONE DEVELOPERS, LLC, a Florida Limited Liability Company, whose post office address is P.O. Box 815, Lake City, Florida 32056, grantee.

(Whenever used herein the terms "grantor" and "grantee" include all the parties to this instrument and the heirs, legal representatives and assigns of individuals, and the successors and assigns of corporations, trusts and trustees)

Witnesseth: that said grantor, for and in consideration of the sum of Ten Dollars ($10.00), and other good and valuable considerations to said grantor in hand paid by said grantee, the receipt whereof is hereby acknowledged, has granted, bargained and sold to the said grantee, and grantee's heirs and assigns forever, the following described land, situate, lying and being in Columbia County, Florida, to-wit:

Lots 65,66,67,68,71,72,73,74,93,94,95,96,97 & 98, Emerald Cove, Phase 1, a subdivision according to the plat thereof recorded in Plat Book 8, Pages 35-36, public records, Columbia County, Florida.

Together with all the tenements, hereditaments and appurtenances thereto belonging or in anywise appertaining.

To Have and to Hold, the same in fee simple forever.

And subject to taxes for the current year and later years and all valid easements and restrictions of record, if any, which are not hereby reimposed; and also subject to any claim, right, title or interest arising from any recorded instrument reserving, conveying, leasing, or otherwise alienating any interest in the oil, gas and other minerals. And grantor does warrant the title to said land and will defend the same against the lawful claims of all persons whomsoever, subject only to the exceptions set forth herein.

In Witness Whereof, grantor has hereunto set grantor's hand and seal the day and year first above written.

Signed, sealed and delivered in our presence:

DeEtte F. Brown
(Signature of First Witness)
DeEtte F. Brown
(Typed Name of First Witness)

Karen M. Wright
(Signature of Second Witness)
KAREN M. Wright
(Typed Name of Second Witness)

D D P CORPORATION

BY: _____ (SEAL)
O. P. Daughtry, III,
President

(Corporate Seal)

STATE OF FLORIDA
COUNTY OF COLUMBIA

The foregoing instrument was acknowledged before me this 18th day of October, 2005, by O. P. Daughtry, III, President of D D P Corporation, a Florida corporation, on behalf of said corporation, who is/are personally known to me or who has/have produced _____ as identification and who did not take an oath.

Karen M. Wright
Notary Public
Printed, typed, or stamped name:

My Commission Expires:

KAREN M. WRIGHT
Notary Public - State of Florida
My Commission Expires Jan 23, 2008
Commission # DD055234
Bonded By National Notary Assn.

Inst:2005026450 Date:10/24/2005 Time:13:06
Doc Stamp-Deed : 3628.80
_____DC,P.DeWitt Cason,Columbia County B:1062 P:2215

05-1128-N

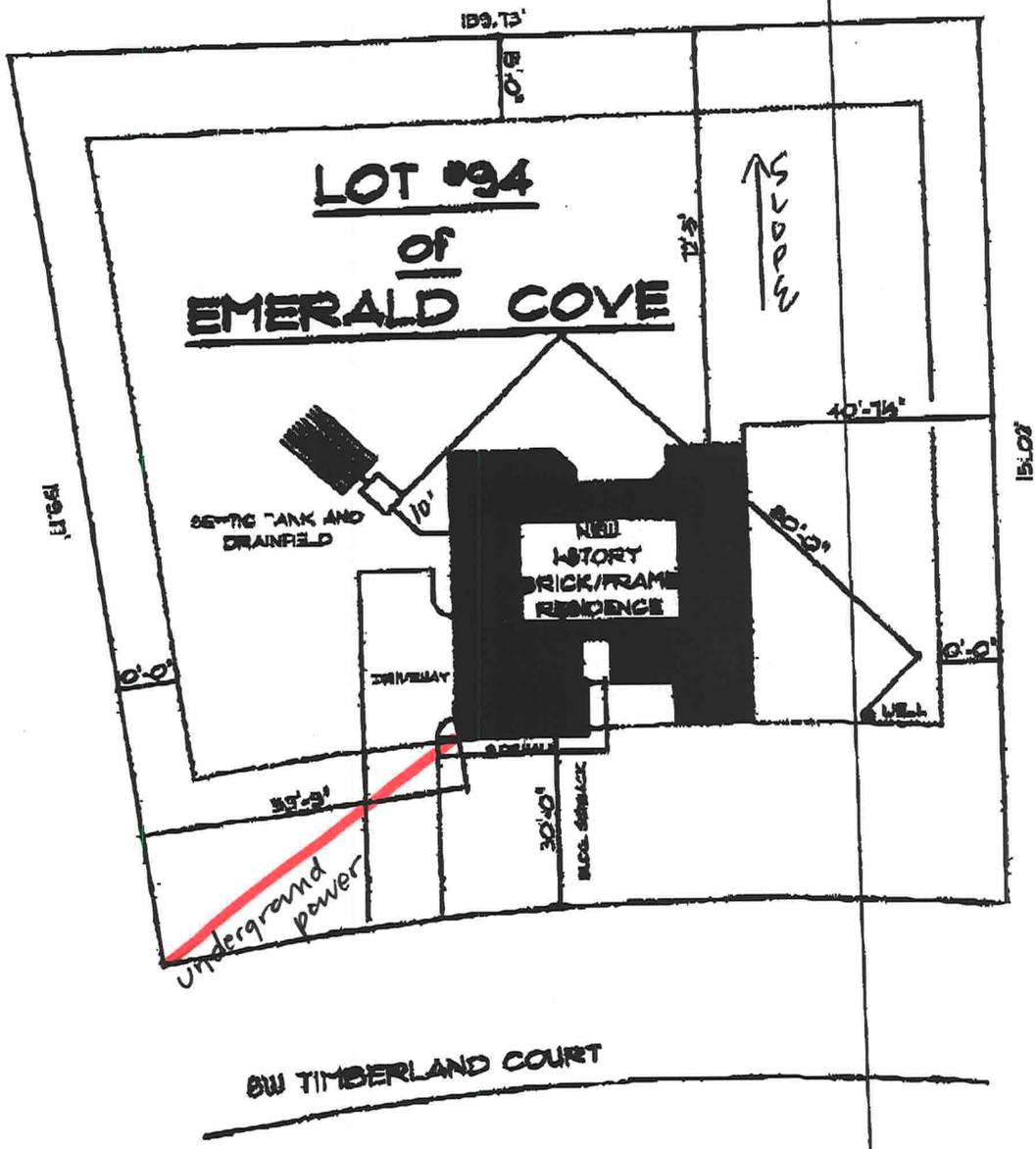

• SITE PLAN •

SCALE : 1" = 30'-0"

Rock D Zecher

FORM 600A-2004 EnergyGauge® 4.0

FLORIDA ENERGY EFFICIENCY CODE FOR BUILDING CONSTRUCTION

Florida Department of Community Affairs

Residential Whole Building Performance Method A

Project Name:	**TheSamuelModel510317**	Builder:	**Bryan Zecher Construction**
Address:	**Lot: 94, Sub: Emerald cove, Plat:**	Permitting Office:	Columbia
City, State:	**Lake City, FL**	Permit Number:	23914
Owner:	**Model Home**	Jurisdiction Number:	221000
Climate Zone:	**North**		

1. New construction or existing	New	__
2. Single family or multi-family	Single family	__
3. Number of units, if multi-family	1	__
4. Number of Bedrooms	3	__
5. Is this a worst case?	Yes	__
6. Conditioned floor area (ft²)	1500 ft²	__
7. Glass type[1] and area: (Label reqd. by 13-104.4.5 if not default)		
a. U-factor: (or Single or Double DEFAULT)	Description Area 7a. (Dble Default) 122.0 ft²	__
b. SHGC: (or Clear or Tint DEFAULT)	7b. (Clear) 122.0 ft²	__
8. Floor types		
a. Slab-On-Grade Edge Insulation	R=0.0, 196.0(p) ft	__
b. N/A		__
c. N/A		__
9. Wall types		
a. Frame, Wood, Adjacent	R=13.0, 172.0 ft²	__
b. Frame, Wood, Exterior	R=13.0, 1051.0 ft²	__
c. N/A		__
d. N/A		__
e. N/A		__
10. Ceiling types		__
a. Under Attic	R=30.0, 1754.0 ft²	
b. N/A		__
c. N/A		__
11. Ducts		__
a. Sup: Unc. Ret: Unc. AH: Garage	Sup. R=6.0, 150.0 ft	
b. N/A		__
		__

12. Cooling systems		
a. Central Unit	Cap: 34.0 kBtu/hr	__
	SEER: 12.00	__
b. N/A		__
		__
c. N/A		__
		__
13. Heating systems		
a. Electric Heat Pump	Cap: 34.0 kBtu/hr	__
	HSPF: 7.90	__
b. N/A		__
		__
c. N/A		__
		__
14. Hot water systems		
a. Electric Resistance	Cap: 40.0 gallons	__
	EF: 0.93	__
b. N/A		__
		__
c. Conservation credits (HR-Heat recovery, Solar DHP-Dedicated heat pump)		__
15. HVAC credits (CF-Ceiling fan, CV-Cross ventilation, HF-Whole house fan, PT-Programmable Thermostat, MZ-C-Multizone cooling, MZ-H-Multizone heating)		__

Glass/Floor Area: 0.16

Total as-built points: 23591
Total base points: 23606

PASS

I hereby certify that the plans and specifications covered by this calculation are in compliance with the Florida Energy Code.

PREPARED BY: Ben Grant

DATE: 11-7-05

I hereby certify that this building, as designed, is in compliance with the Florida Energy Code.

OWNER/AGENT: Chris W. Cy

DATE: 11-17-05

Review of the plans and specifications covered by this calculation indicates compliance with the Florida Energy Code. Before construction is completed this building will be inspected for compliance with Section 553.908 Florida Statutes.

GREAT SEAL OF THE STATE OF FLORIDA · IN GOD WE TRUST

BUILDING OFFICIAL: _____

DATE: _____

1 Predominant glass type. For actual glass type and areas, see Summer & Winter Glass output on pages 2&4.

SUMMER CALCULATIONS

Residential Whole Building Performance Method A - Details

ADDRESS: **Lot: 94, Sub: Emerald cove, Plat: , Lake City, FL,** PERMIT #:

BASE

GLASS TYPES

.18 X Conditioned Floor Area	X BSPM	= Points
.18 1500.0	**20.04**	**5410.8**

WALL TYPES	Area	X BSPM	= Points
Adjacent	172.0	0.70	120.4
Exterior	1051.0	1.70	1786.7
Base Total:	**1223.0**		**1907.1**

DOOR TYPES	Area	X BSPM	= Points
Adjacent	20.0	2.40	48.0
Exterior	40.0	6.10	244.0
Base Total:	**60.0**		**292.0**

CEILING TYPES	Area	X BSPM	= Points
Under Attic	1500.0	1.73	2595.0
Base Total:	**1500.0**		**2595.0**

FLOOR TYPES	Area	X BSPM	= Points
Slab	196.0(p)	-37.0	-7252.0
Raised	0.0	0.00	0.0
Base Total:			**-7252.0**

AS-BUILT

Type/SC	Overhang Ornt	Len	Hgt	Area X	SPM X	SOF =	Points
Double, Clear	SE	2.0	5.5	45.0	42.75	0.77	1488.9
Double, Clear	S	14.5	7.0	10.0	35.87	0.45	161.1
Double, Clear	SE	12.0	5.3	45.0	42.75	0.39	759.0
Double, Clear	E	8.5	7.0	10.0	42.06	0.47	196.6
Double, Clear	SW	2.0	1.5	3.0	40.16	0.44	53.0
Double, Clear	NW	9.5	7.5	6.0	25.97	0.60	93.2
Double, Clear	NW	2.0	5.5	30.0	25.97	0.86	666.7
Double, Clear	NW	2.0	8.0	30.0	25.97	0.93	721.1
Double, Clear	NE	1.5	3.5	3.0	29.56	0.80	71.0
Double, Clear	SE	1.5	5.5	30.0	42.75	0.86	1104.3
Double, Clear	SW	1.5	5.5	30.0	40.16	0.86	1039.8
As-Built Total:				**242.0**			**6354.8**

Type	R-Value	Area X	SPM	= Points
Frame, Wood, Adjacent	13.0	172.0	0.60	103.2
Frame, Wood, Exterior	13.0	1051.0	1.50	1576.5
As-Built Total:		**1223.0**		**1679.7**

Type	Area X	SPM	= Points
Exterior Insulated	20.0	4.10	82.0
Exterior Insulated	20.0	4.10	82.0
Adjacent Insulated	20.0	1.60	32.0
As-Built Total:	**60.0**		**196.0**

Type	R-Value	Area X	SPM X SCM =	Points
Under Attic	30.0	1754.0	1.73 X 1.00	3034.4
As-Built Total:		**1754.0**		**3034.4**

Type	R-Value	Area X	SPM	= Points
Slab-On-Grade Edge Insulation	0.0	196.0(p	-41.20	-8075.2
As-Built Total:		**196.0**		**-8075.2**

SUMMER CALCULATIONS

Residential Whole Building Performance Method A - Details

ADDRESS: **Lot: 94, Sub: Emerald cove, Plat: , Lake City, FL,** PERMIT #:

BASE				AS-BUILT						
INFILTRATION	Area X	BSPM	= Points				Area X	SPM	=	Points
	1500.0	10.21	15315.0				1500.0	10.21		15315.0
Summer Base Points: 18267.9				**Summer As-Built Points:**						**18504.7**
Total Summer Points	X System Multiplier	= Cooling Points		Total Component (System - Points)	X Cap Ratio	X Duct Multiplier (DM x DSM x AHU)	X System Multiplier	X Credit Multiplier	=	Cooling Points
				(sys 1: Central Unit 34000 btuh ,SEER/EFF(12.0) Ducts:Unc(S),Unc(R),Gar(AH),R6.0(INS)						
				18505	1.00	(1.09 x 1.147 x 1.00)	0.284	1.000		6580.0
18267.9	**0.4266**	**7793.1**		**18504.7**	**1.00**	**1.250**	**0.284**	**1.000**		**6580.0**

WINTER CALCULATIONS

Residential Whole Building Performance Method A - Details

ADDRESS: **Lot: 94, Sub: Emerald cove, Plat: , Lake City, FL,** PERMIT #:

BASE

GLASS TYPES

.18 X	Conditioned Floor Area	BWPM	= Points
.18	**1500.0**	**12.74**	**3439.8**

AS-BUILT

Type/SC	Overhang Ornt	Len	Hgt	Area	X WPM	X WOF	= Points
Double, Clear	SE	2.0	5.5	45.0	14.71	1.21	798.3
Double, Clear	S	14.5	7.0	10.0	13.30	3.52	468.1
Double, Clear	SE	12.0	5.3	45.0	14.71	2.54	1682.8
Double, Clear	E	8.5	7.0	10.0	18.79	1.34	252.1
Double, Clear	SW	2.0	1.5	3.0	16.74	1.76	88.2
Double, Clear	NW	9.5	7.5	6.0	24.30	1.03	149.9
Double, Clear	NW	2.0	5.5	30.0	24.30	1.01	734.7
Double, Clear	NW	2.0	8.0	30.0	24.30	1.00	731.2
Double, Clear	NE	1.5	3.5	3.0	23.57	1.02	72.1
Double, Clear	SE	1.5	5.5	30.0	14.71	1.11	491.5
Double, Clear	SW	1.5	5.5	30.0	16.74	1.07	538.4
As-Built Total:				**242.0**			**6007.3**

WALL TYPES	Area	X BWPM	= Points	Type	R-Value	Area	X WPM	= Points
Adjacent	172.0	3.60	619.2	Frame, Wood, Adjacent	13.0	172.0	3.30	567.6
Exterior	1051.0	3.70	3888.7	Frame, Wood, Exterior	13.0	1051.0	3.40	3573.4
Base Total:	**1223.0**		**4507.9**	**As-Built Total:**		**1223.0**		**4141.0**

DOOR TYPES	Area	X BWPM	= Points	Type	Area	X WPM	= Points
Adjacent	20.0	11.50	230.0	Exterior Insulated	20.0	8.40	168.0
Exterior	40.0	12.30	492.0	Exterior Insulated	20.0	8.40	168.0
				Adjacent Insulated	20.0	8.00	160.0
Base Total:	**60.0**		**722.0**	**As-Built Total:**	**60.0**		**496.0**

CEILING TYPES	Area	X BWPM	= Points	Type	R-Value	Area	X WPM X WCM	= Points
Under Attic	1500.0	2.05	3075.0	Under Attic	30.0	1754.0	2.05 X 1.00	3595.7
Base Total:	**1500.0**		**3075.0**	**As-Built Total:**		**1754.0**		**3595.7**

FLOOR TYPES	Area	X BWPM	= Points	Type	R-Value	Area	X WPM	= Points
Slab	196.0(p)	8.9	1744.4	Slab-On-Grade Edge Insulation	0.0	196.0(p	18.80	3684.8
Raised	0.0	0.00	0.0					
Base Total:			**1744.4**	**As-Built Total:**		**196.0**		**3684.8**

WINTER CALCULATIONS

Residential Whole Building Performance Method A - Details

ADDRESS: **Lot: 94, Sub: Emerald cove, Plat: , Lake City, FL,** PERMIT #:

BASE				AS-BUILT						
INFILTRATION	Area X	BWPM =	Points				Area X	WPM	=	Points
	1500.0	-0.59	-885.0				1500.0	-0.59		-885.0
Winter Base Points:			**12604.1**	**Winter As-Built Points:**						**17039.8**
Total Winter Points	X System Multiplier	= Heating Points		Total Component (System - Points)	X Cap Ratio	X Duct Multiplier (DM x DSM x AHU)	X System Multiplier	X Credit Multiplier	= Heating Points	
				(sys 1: Electric Heat Pump 34000 btuh ,EFF(7.9) Ducts:Unc(S),Unc(R),Gar(AH),R6.0						
				17039.8	1.000	(1.069 x 1.169 x 1.00)	0.432	1.000		9191.5
12604.1	**0.6274**	**7907.8**		**17039.8**	**1.00**	**1.250**	**0.432**	**1.000**		**9191.5**

WATER HEATING & CODE COMPLIANCE STATUS

Residential Whole Building Performance Method A - Details

ADDRESS: **Lot: 94, Sub: Emerald cove, Plat: , Lake City, FL,** PERMIT #:

BASE				AS-BUILT							
WATER HEATING											
Number of Bedrooms	X	Multiplier	= Total	Tank Volume	EF	Number of Bedrooms	X	Tank Ratio	X Multiplier	X Credit Multiplier	= Total
3		2635.00	7905.0	40.0	0.93	3		1.00	2606.67	1.00	7820.0
				As-Built Total:							**7820.0**

CODE COMPLIANCE STATUS

BASE				AS-BUILT			
Cooling Points +	Heating Points +	Hot Water Points =	Total Points	Cooling Points +	Heating Points +	Hot Water Points =	Total Points
7793	**7908**	**7905**	**23606**	**6580**	**9191**	**7820**	**23591**

PASS

Code Compliance Checklist

Residential Whole Building Performance Method A - Details

ADDRESS: **Lot: 94, Sub: Emerald cove, Plat: , Lake City, FL,** PERMIT #:

6A-21 INFILTRATION REDUCTION COMPLIANCE CHECKLIST

COMPONENTS	SECTION	REQUIREMENTS FOR EACH PRACTICE	CHECK
Exterior Windows & Doors	606.1.ABC.1.1	Maximum:.3 cfm/sq.ft. window area; .5 cfm/sq.ft. door area.	
Exterior & Adjacent Walls	606.1.ABC.1.2.1	Caulk, gasket, weatherstrip or seal between: windows/doors & frames, surrounding wall; foundation & wall sole or sill plate; joints between exterior wall panels at corners; utility penetrations; between wall panels & top/bottom plates; between walls and floor. EXCEPTION: Frame walls where a continuous infiltration barrier is installed that extends from, and is sealed to, the foundation to the top plate.	
Floors	606.1.ABC.1.2.2	Penetrations/openings >1/8" sealed unless backed by truss or joint members. EXCEPTION: Frame floors where a continuous infiltration barrier is installed that is sealed to the perimeter, penetrations and seams.	
Ceilings	606.1.ABC.1.2.3	Between walls & ceilings; penetrations of ceiling plane of top floor; around shafts, chases, soffits, chimneys, cabinets sealed to continuous air barrier; gaps in gyp board & top plate; attic access. EXCEPTION: Frame ceilings where a continuous infiltration barrier is installed that is sealed at the perimeter, at penetrations and seams.	
Recessed Lighting Fixtures	606.1.ABC.1.2.4	Type IC rated with no penetrations, sealed; or Type IC or non-IC rated, installed inside a sealed box with 1/2" clearance & 3" from insulation; or Type IC rated with < 2.0 cfm from conditioned space, tested.	
Multi-story Houses	606.1.ABC.1.2.5	Air barrier on perimeter of floor cavity between floors.	
Additional Infiltration reqts	606.1.ABC.1.3	Exhaust fans vented to outdoors, dampers; combustion space heaters comply with NFPA, have combustion air.	

6A-22 OTHER PRESCRIPTIVE MEASURES (must be met or exceeded by all residences.)

COMPONENTS	SECTION	REQUIREMENTS	CHECK
Water Heaters	612.1	Comply with efficiency requirements in Table 612.1.ABC.3.2. Switch or clearly marked circuit breaker (electric) or cutoff (gas) must be provided. External or built-in heat trap required.	
Swimming Pools & Spas	612.1	Spas & heated pools must have covers (except solar heated). Non-commercial pools must have a pump timer. Gas spa & pool heaters must have a minimum thermal efficiency of 78%.	
Shower heads	612.1	Water flow must be restricted to no more than 2.5 gallons per minute at 80 PSIG.	
Air Distribution Systems	610.1	All ducts, fittings, mechanical equipment and plenum chambers shall be mechanically attached, sealed, insulated, and installed in accordance with the criteria of Section 610. Ducts in unconditioned attics: R-6 min. insulation.	
HVAC Controls	607.1	Separate readily accessible manual or automatic thermostat for each system.	
Insulation	604.1, 602.1	Ceilings-Min. R-19. Common walls-Frame R-11 or CBS R-3 both sides. Common ceiling & floors R-11.	

ENERGY PERFORMANCE LEVEL (EPL) DISPLAY CARD

ESTIMATED ENERGY PERFORMANCE SCORE* = 82.8

The higher the score, the more efficient the home.

Model Home, Lot: 94, Sub: Emerald cove, Plat: , Lake City, FL,

1. New construction or existing	New	
2. Single family or multi-family	Single family	
3. Number of units, if multi-family	1	
4. Number of Bedrooms	3	
5. Is this a worst case?	Yes	
6. Conditioned floor area (ft²)	1500 ft²	
7. Glass type[1] and area: (Label reqd. by 13-104.4.5 if not default)		
a. U-factor:	Description Area	
(or Single or Double DEFAULT) 7a.	(Dble Default) 122.0 ft²	
b. SHGC:		
(or Clear or Tint DEFAULT) 7b.	(Clear) 122.0 ft²	
8. Floor types		
a. Slab-On-Grade Edge Insulation	R=0.0, 196.0(p) ft	
b. N/A		
c. N/A		
9. Wall types		
a. Frame, Wood, Adjacent	R=13.0, 172.0 ft²	
b. Frame, Wood, Exterior	R=13.0, 1051.0 ft²	
c. N/A		
d. N/A		
e. N/A		
10. Ceiling types		
a. Under Attic	R=30.0, 1754.0 ft²	
b. N/A		
c. N/A		
11. Ducts		
a. Sup: Unc. Ret: Unc. AH: Garage	Sup. R=6.0, 150.0 ft	
b. N/A		
12. Cooling systems		
a. Central Unit	Cap: 34.0 kBtu/hr	
	SEER: 12.00	
b. N/A		
c. N/A		
13. Heating systems		
a. Electric Heat Pump	Cap: 34.0 kBtu/hr	
	HSPF: 7.90	
b. N/A		
c. N/A		
14. Hot water systems		
a. Electric Resistance	Cap: 40.0 gallons	
	EF: 0.93	
b. N/A		
c. Conservation credits (HR-Heat recovery, Solar DHP-Dedicated heat pump)		
15. HVAC credits (CF-Ceiling fan, CV-Cross ventilation, HF-Whole house fan, PT-Programmable Thermostat, MZ-C-Multizone cooling, MZ-H-Multizone heating)		

I certify that this home has complied with the Florida Energy Efficiency Code For Building Construction through the above energy saving features which will be installed (or exceeded) in this home before final inspection. Otherwise, a new EPL Display Card will be completed based on installed Code compliant features.

Builder Signature: _____ Date: 11-17-05

Address of New Home: 196 SW TIMBERLAND CT City/FL Zip: LAKE CITY FL

**NOTE: The home's estimated energy performance score is only available through the FLA/RES computer program. This is not a Building Energy Rating. If your score is 80 or greater (or 86 for a US EPA/DOE EnergyStar™ designation), your home may qualify for energy efficiency mortgage (EEM) incentives if you obtain a Florida Energy Gauge Rating. Contact the Energy Gauge Hotline at 321/638-1492 or see the Energy Gauge web site at www.fsec.ucf.edu for information and a list of certified Raters. For information about Florida's Energy Efficiency Code For Building Construction, contact the Department of Community Affairs at 850/487-1824.*

1 Predominant glass type. For actual glass type and areas, see Summer & Winter Glass output on pages 2&4.

EnergyGauge® (Version: FLRCSB v4.0)

BUILDING INPUT SUMMARY REPORT

PROJECT

Title:	TheSamuelModel510317	**Family Type:**	Single	**Address Type:**	Lot Information
Owner:	Model Home	**New/Existing:**	New	**Lot #:**	94
# of Units:	1	**Bedrooms:**	3	**Subdivision:**	Emerald cove
Builder Name:	Bryan Zecher Construction	**Conditioned Area:**	1500	**Platbook:**	(blank)
Climate:	North	**Total Stories:**	1	**Street:**	N/A
Permit Office:	(blank)	**Worst Case:**	Yes	**County:**	(blank)
Jurisdiction #:	(blank)	**Rotate Angle:**	(blank)	**City, St, Zip:**	Lake City, FL,

FLOORS

#	Floor Type	R-Val	Area/Perimeter	Units
1	Slab-On-Grade Edge Insulation	0.0	196.0(p) ft	1

DOORS

#	Door Type	Orientation	Area	Units
1	Insulated	Exterior	10.0 ft²	2
2	Insulated	Exterior	20.0 ft²	1
3	Insulated	Adjacent	20.0 ft²	1

CEILINGS

#	Ceiling Type	R-Val	Area	Base Area	Units
1	Under Attic	30.0	1754.0 ft²	1500.0 ft²	1

Credit Multipliers: None

COOLING

#	System Type	Efficiency	Capacity
1	Central Unit	SEER: 12.00	34.0 kBtu/hr

Credit Multipliers: None

WALLS

#	Wall Type	Location	R-Val	Area	Units
1	Frame - Wood	Adjacent	13.0	172.0 ft²	1
2	Frame - Wood	Exterior	13.0	1051.0 ft²	1

HEATING

#	System Type	Efficiency	Capacity
1	Electric Heat Pump	COP: 7.90	34.0 kBtu/hr

Credit Multipliers: None

DUCTS

#	Supply Location	Return Location	Air Handler Location	Supply R-Val	Supply Length
1	Uncond.	Uncond.	Garage	6.0	150.0 ft

Credit Multipliers: None

WINDOWS

#	Panes	Tint	Ornt	Area	OH Length	OH Hght	Units
1	Double	Clear	N	15.0 ft²	2.0 ft	5.5 ft	3
2	Double	Clear	NE	10.0 ft²	14.5 ft	7.0 ft	1
3	Double	Clear	N	15.0 ft²	12.0 ft	5.3 ft	3
4	Double	Clear	NW	10.0 ft²	8.5 ft	7.0 ft	1
5	Double	Clear	E	3.0 ft²	2.0 ft	1.5 ft	1
6	Double	Clear	S	6.0 ft²	9.5 ft	7.5 ft	1
7	Double	Clear	S	15.0 ft²	2.0 ft	5.5 ft	2
8	Double	Clear	S	15.0 ft²	2.0 ft	8.0 ft	2
9	Double	Clear	W	3.0 ft²	1.5 ft	3.5 ft	1
10	Double	Clear	N	15.0 ft²	1.5 ft	5.5 ft	2
11	Double	Clear	E	15.0 ft²	1.5 ft	5.5 ft	2

WATER

#	System Type	EF	Cap.	Conservation Type	Con. EF
1	Electric Resistance	0.93	40.0	None	0.00

REFR.

#	Use Default?	Annual Operating Cost	Electric Rate
1	Yes	N/A	N/A

STATE OF FLORIDA
DEPARTMENT OF HEALTH
APPLICATION FOR ONSITE SEWAGE DISPOSAL SYSTEM CONSTRUCTION PERMIT

Permit Application Number 05-1628N

---------- PART II - SITEPLAN ----------

Scale: 1 inch = 50 feet.

See attached

Notes: _____

Site Plan submitted by: Rock [illegible] MASTER CONTRACTOR

Plan Approved X Not Approved ____ Date OCT 24 2005

By [illegible] COLUMBIA County Health Department

ALL CHANGES MUST BE APPROVED BY THE COUNTY HEALTH DEPARTMENT

DH 4015, 10/96 (Replaces HRS-H Form 4016 which may be used)
(Stock Number: 5744-002-4015-6)

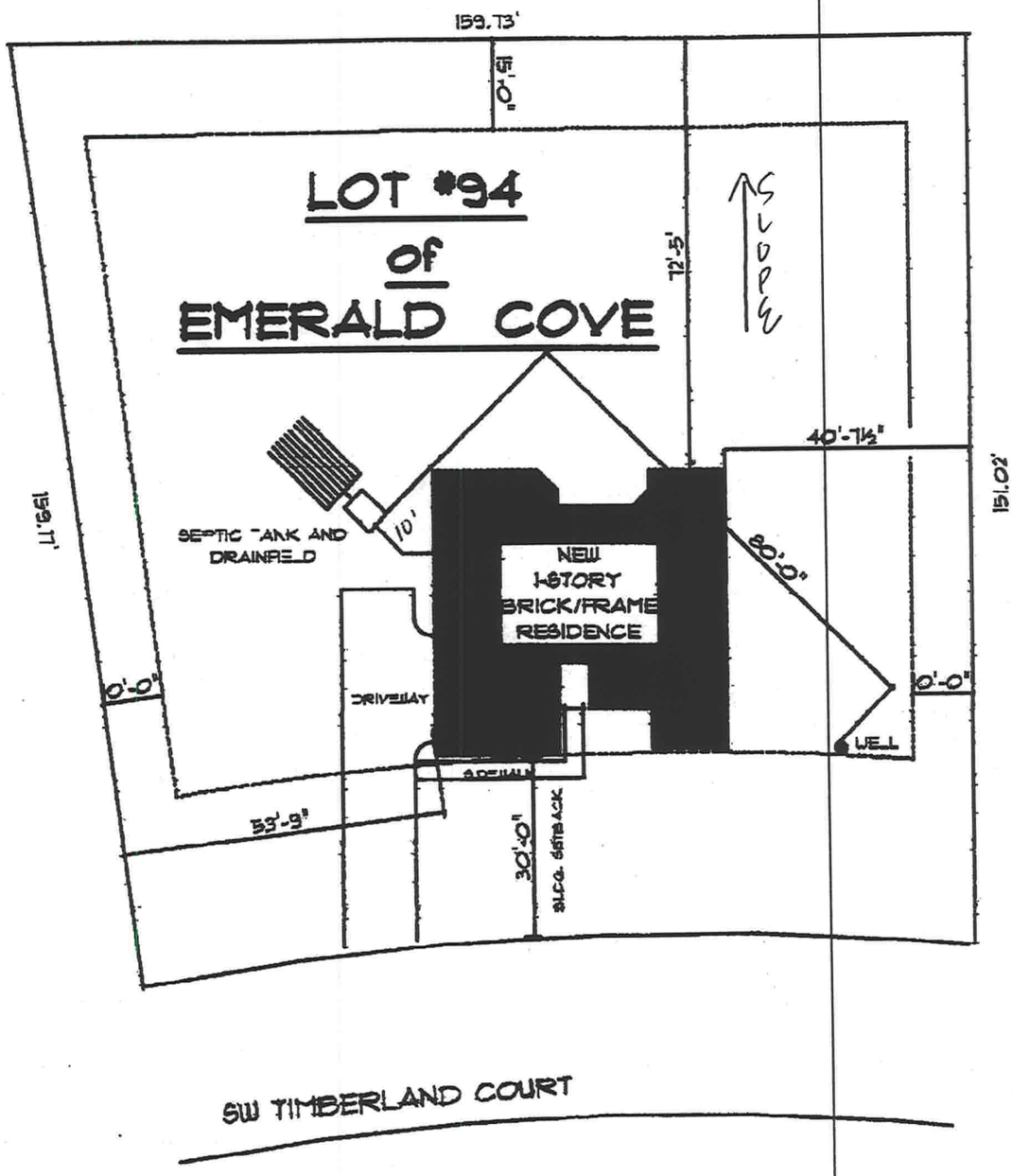

• SITE PLAN •

SCALE : 1" = 30'-0'

Rock D Zecher

HALL'S PUMP & WELL SERVICE, INC.

SPECIALIZING IN 4"-6" WELLS

DONALD AND MARY HALL
OWNERS

PHONE (904) 752-1854
FAX (904) 755-7022
~~XXXXXXXXXXXXXXXXXX~~
LAKE CITY, FLORIDA 32055
904 NW Main Blvd.

June 12, 2002

NOTICE TO ALL CONTRACTORS

Please be advised that due to the new building codes we will use a large capacity diaphram tank on all new wells. This will insure a minimum of one (1) minute draw down or one (1) minute refill. If a smaller diaphram tank is used then we will install a cycle stop valve which will produce the same results.

If you have any questions please feel free to call our office anytime.

Thank you,

Donald D. Hall
DDH/jk

Columbia County Building Department
Culvert Permit

Culvert Permit No.
000000902

DATE 11/30/2005 PARCEL ID # 33-3S-16-02438-194

APPLICANT SUSAN FAIR PHONE 752-1711

ADDRESS 180 NW AMENITY COURT LAKE CITY FL 32055

OWNER CORNERSTONE DEVELOPERS PHONE 752-1711

ADDRESS 196 SW TIMBERLAND COURT LAKE CITY FL 32055

CONTRACTOR BRYAN ZECHER PHONE 752-1711

LOCATION OF PROPERTY 90W, TL ON HEATHRIDGE COURT, TR ON TIMBERLAND COURT, 4TH LOT ON RIGHT

SUBDIVISION/LOT/BLOCK/PHASE/UNIT EMERALD COVE 94

SIGNATURE Susan Fair

INSTALLATION REQUIREMENTS

[X] Culvert size will be 18 inches in diameter with a total lenght of 32 feet, leaving 24 feet of driving surface. Both ends will be mitered 4 foot with a 4 : 1 slope and poured with a 4 inch thick reinforced concrete slab.

INSTALLATION NOTE: Turnouts will be required as follows:
a) a majority of the current and existing driveway turnouts are paved, or;
b) the driveway to be served will be paved or formed with concrete.
Turnouts shall be concrete or paved a minimum of 12 feet wide or the width of the concrete or paved driveway, whichever is greater. The width shall conform to the current and existing paved or concreted turnouts.

[ ] Culvert installation shall conform to the approved site plan standards.

[ ] Department of Transportation Permit installation approved standards.

[ ] Other

ALL PROPER SAFETY REQUIREMENTS SHOULD BE FOLLOWED DURING THE INSTALATION OF THE CULVERT.

135 NE Hernando Ave., Suite B-21
Lake City, FL 32055
Phone: 386-758-1008 Fax: 386-758-2160

Amount Paid 25.00

Project Information for:	L138287		
Builder:	BRYAN ZECHER	Date:	11/3/2005
Lot:	LOT 94 EMERALD COVE	Start Number:	1134
Subdivision:	N/A		
County or City:	COLUMBIA COUNTY		
Truss Page Count:	32		

Truss Design Load Information (UNO) Design Program: MiTek 5.2 / 6.2

Gravity		**Wind**		**Building Code:**	FBC2004
Roof (psf):	42	Wind Standard:	ASCE 7-02		
Floor (psf):	55	Wind Speed (mph):	110		

Note: See individual truss drawings for special loading conditions

Building Designer, responsible for Structural Engineering: (See attached)

ZECHER, BRYAN C. CBC 054575
Address: PO BOX 815
ALACHUA,FL 32615 Designer: 134

Truss Design Engineer: Thomas, E. Miller, P.E., 56877 - Byron K. Anderson, PE FL 60987
Company: Structural Engineering and Inspections, Inc. EB 9196
Address 16105 N. Florida Ave, Ste B, Lutz, FL 33549

Notes:

1. Truss Design Engineer is responsible for the individual trusses as components only.
2. Determination as to the suitability and use of these truss components for the structure is the responsibility of the Building Designer of Record, as defined in ANSI/TPI
3. The seal date shown on the individual truss component drawings must match the seal date on this index sheet.
4. Trusses designed for veritcal loads only, unless noted otherwise.

#	Truss ID	Dwg. #	Seal Date	#	Truss ID	Dwg. #	Seal Date
1	CJ1	1103051134	11/3/2005				
2	CJ3	1103051135	11/3/2005				
3	CJ3A	1103051136	11/3/2005				
4	CJ5	1103051137	11/3/2005				
5	CJ5A	1103051138	11/3/2005				
6	EJ5	1103051139	11/3/2005				
7	EJ7	1103051140	11/3/2005				
8	EJ7A	1103051141	11/3/2005				
9	HJ5	1103051142	11/3/2005				
10	HJ7	1103051143	11/3/2005				
11	HJ7A	1103051144	11/3/2005				
12	T01	1103051145	11/3/2005				
13	T02	1103051146	11/3/2005				
14	T03	1103051147	11/3/2005				
15	T04	1103051148	11/3/2005				
16	T05	1103051149	11/3/2005				
17	T06	1103051150	11/3/2005				
18	T07	1103051151	11/3/2005				
19	T08	1103051152	11/3/2005				
20	T09	1103051153	11/3/2005				
21	T10	1103051154	11/3/2005				
22	T11	1103051155	11/3/2005				
23	T12	1103051156	11/3/2005				
24	T13	1103051157	11/3/2005				
25	T14	1103051158	11/3/2005				
26	T15	1103051159	11/3/2005				
27	T16	1103051160	11/3/2005				
28	T17	1103051161	11/3/2005				
29	T18	1103051162	11/3/2005				
30	T19H	1103051163	11/3/2005				
31	T20H	1103051164	11/3/2005				
32	T21H	1103051165	11/3/2005				

NOV 0 3 2005

Dwg.#1103051133

10:00:13 AM

Licensee Details

Licensee Information

Name:	**ZECHER, BRYAN CHRISTIAN (Primary Name)** **BRYAN ZECHER CONSTRUCTION INC (DBA**
Main Address:	**P O BOX 815** **LAKE CITY, Florida 32056**
Lic. Location:	**465 NW ORANGE ST** **LAKE CITY, FL 32055 United States** **Columbia**

License Information

License Type:	**Certified Building Contractor**
Rank:	**Cert Building**
License Number:	**CBC054575**
Status:	**Current, Active**
Licensure Date:	**12/05/1991**
Expires:	**08/31/2006**

Special Qualifications	Effective Date
Bldg Code Core Course Credit	
Qualified Business License Required	04/13/2004

View Related License Information

View License Complaint

New Search

NOVEMBER 03,2005 TRUSS DESIGN ENGINEER:
THOMAS E. MILLER PE 56877, BYRON K. ANDERSON PE 60987
STRUCTURAL ENGINEERING TOO NORTH, INC. EB 9196
16105 N. FLORIDA AVE. STE B, LUTZ, FL 33549

Job	Truss	Truss Type	Qty	Ply	BRYAN ZECHER- LOT 94 EMERALD COVE
L138287	CJ1	MONO TRUSS	10	1	Dwg.#1103051134 Job Reference (optional)

Builders FirstSource, Lake City, Fl 32055 — 6.200 s Jul 13 2005 MiTek Industries, Inc. Wed Nov 02 09:02:20 2005 Page 1

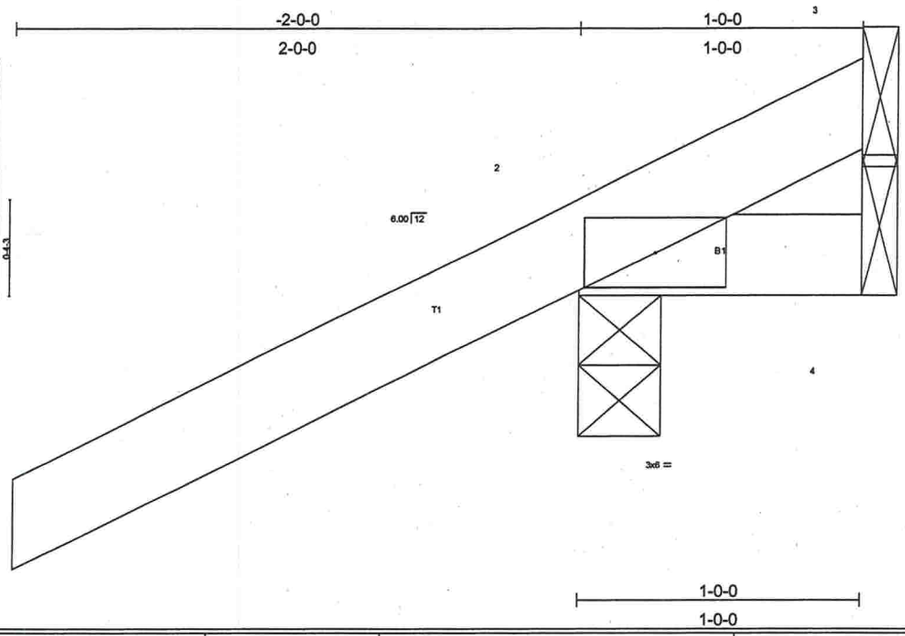

LOADING (psf)		SPACING	2-0-0	CSI		DEFL	in	(loc)	l/defl	L/d	PLATES	GRIP
TCLL	20.0	Plates Increase	1.25	TC	0.28	Vert(LL)	-0.00	2	>999	240	MT20	244/190
TCDL	7.0	Lumber Increase	1.25	BC	0.01	Vert(TL)	-0.00	2	>999	180		
BCLL	10.0	Rep Stress Incr	YES	WB	0.00	Horz(TL)	0.00	3	n/a	n/a		
BCDL	5.0	Code FBC2004/TPI2002		(Matrix)							Weight: 7 lb	

LUMBER
TOP CHORD 2 X 4 SYP No.2
BOT CHORD 2 X 4 SYP No.2

BRACING
TOP CHORD Structural wood sheathing directly applied or 1-0-0 oc purlins.
BOT CHORD Rigid ceiling directly applied or 10-0-0 oc bracing.

REACTIONS (lb/size) 2=266/0-3-8, 4=14/Mechanical, 3=-90/Mechanical
Max Horz 2=87(load case 5)
Max Uplift2=-274(load case 5), 3=-90(load case 1)
Max Grav 2=266(load case 1), 4=14(load case 1), 3=127(load case 5)

FORCES (lb) - Maximum Compression/Maximum Tension
TOP CHORD 1-2=0/47, 2-3=-69/75
BOT CHORD 2-4=0/0

NOTES
1) Wind: ASCE 7-02; 110mph (3-second gust); h=20ft; TCDL=4.2psf; BCDL=3.0psf; Category II; Exp B; enclosed; MWFRS gable end zone and C-C Exterior(2) zone; Lumber DOL=1.60 plate grip DOL=1.60. This truss is designed for C-C for members and forces, and for MWFRS for reactions specified.
2) Refer to girder(s) for truss to truss connections.
3) Provide mechanical connection (by others) of truss to bearing plate capable of withstanding 274 lb uplift at joint 2 and 90 lb uplift at joint 3.

LOAD CASE(S) Standard

NOVEMBER 03,2005 TRUSS DESIGN ENGINEER:
THOMAS E. MILLER PE 56877, BYRON K. ANDERSON PE 60987
STRUCTURAL ENGINEERING AND INSPECTIONS, INC. EB 9196
16105 N. FLORIDA AVE. STE B, LUTZ, FL 33549

Job	Truss	Truss Type	Qty	Ply	BRYAN ZECHER- LOT 94 EMERALD COVE
L138287	CJ3	MONO TRUSS	10	1	Dwg.#1103051135 Job Reference (optional)

Builders FirstSource, Lake City, Fl 32055 — 6.200 s Jul 13 2005 MiTek Industries, Inc. Wed Nov 02 09:02:21 2005 Page 1

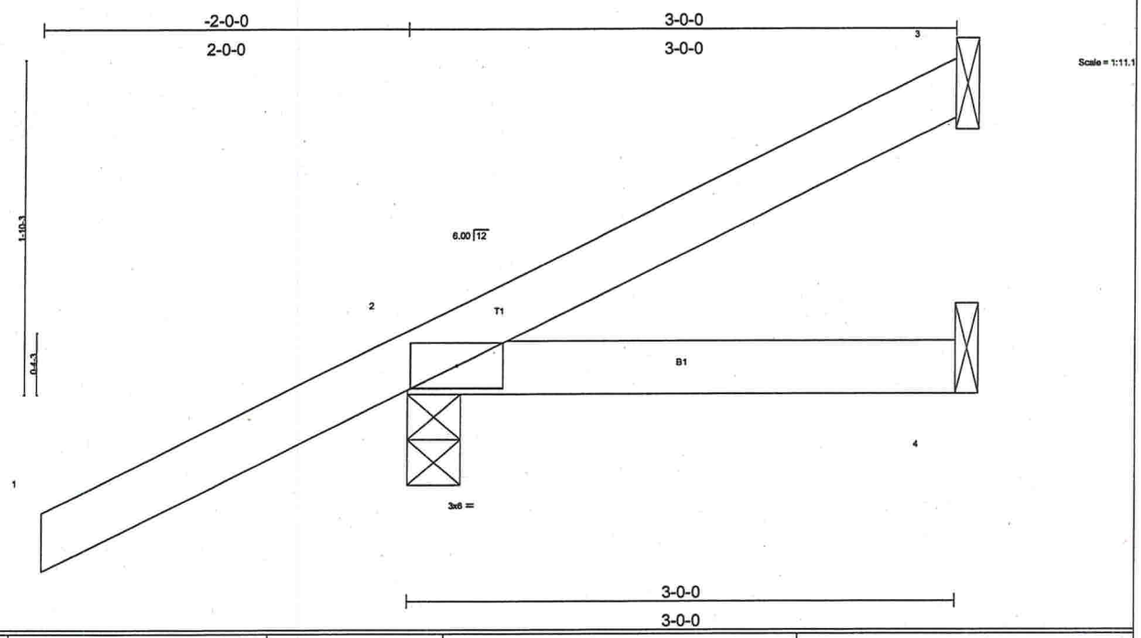

LOADING (psf)		SPACING	2-0-0	CSI		DEFL	in	(loc)	l/defl	L/d	PLATES	GRIP
TCLL	20.0	Plates Increase	1.25	TC	0.29	Vert(LL)	-0.00	2-4	>999	240	MT20	244/190
TCDL	7.0	Lumber Increase	1.25	BC	0.06	Vert(TL)	-0.01	2-4	>999	180		
BCLL	10.0	Rep Stress Incr	YES	WB	0.00	Horz(TL)	-0.00	3	n/a	n/a		
BCDL	5.0	Code FBC2004/TPI2002		(Matrix)							Weight: 13 lb	

LUMBER
TOP CHORD 2 X 4 SYP No.2
BOT CHORD 2 X 4 SYP No.2

BRACING
TOP CHORD Structural wood sheathing directly applied or 3-0-0 oc purlins.
BOT CHORD Rigid ceiling directly applied or 10-0-0 oc bracing.

REACTIONS (lb/size) 3=31/Mechanical, 2=278/0-3-8, 4=42/Mechanical
Max Horz 2=132(load case 5)
Max Uplift3=-28(load case 6), 2=-203(load case 5)

FORCES (lb) - Maximum Compression/Maximum Tension
TOP CHORD 1-2=0/47, 2-3=-57/7
BOT CHORD 2-4=0/0

NOTES
1) Wind: ASCE 7-02; 110mph (3-second gust); h=20ft; TCDL=4.2psf; BCDL=3.0psf; Category II; Exp B; enclosed; MWFRS gable end zone and C-C Exterior(2) zone; Lumber DOL=1.60 plate grip DOL=1.60. This truss is designed for C-C for members and forces, and for MWFRS for reactions specified.
2) Refer to girder(s) for truss to truss connections.
3) Provide mechanical connection (by others) of truss to bearing plate capable of withstanding 28 lb uplift at joint 3 and 203 lb uplift at joint 2.

LOAD CASE(S) Standard

NOVEMBER 03,2005 TRUSS DESIGN ENGINEER:
THOMAS E. MILLER PE 56877, BYRON K. ANDERSON PE 60987
STRUCTURAL ENGINEERING AND INSPECTIONS, INC. EB 9196
16105 N. FLORIDA AVE. STE B, LUTZ, FL 33549

Job	Truss	Truss Type	Qty	Ply	BRYAN ZECHER- LOT 94 EMERALD COVE
L138287	CJ3A	MONO SCISSOR	4	1	Dwg.#1103051136 Job Reference (optional)

Builders FirstSource, Lake City, Fl 32055

6.200 s Jul 13 2005 MiTek Industries, Inc. Wed Nov 02 09:02:21 2005 Page 1

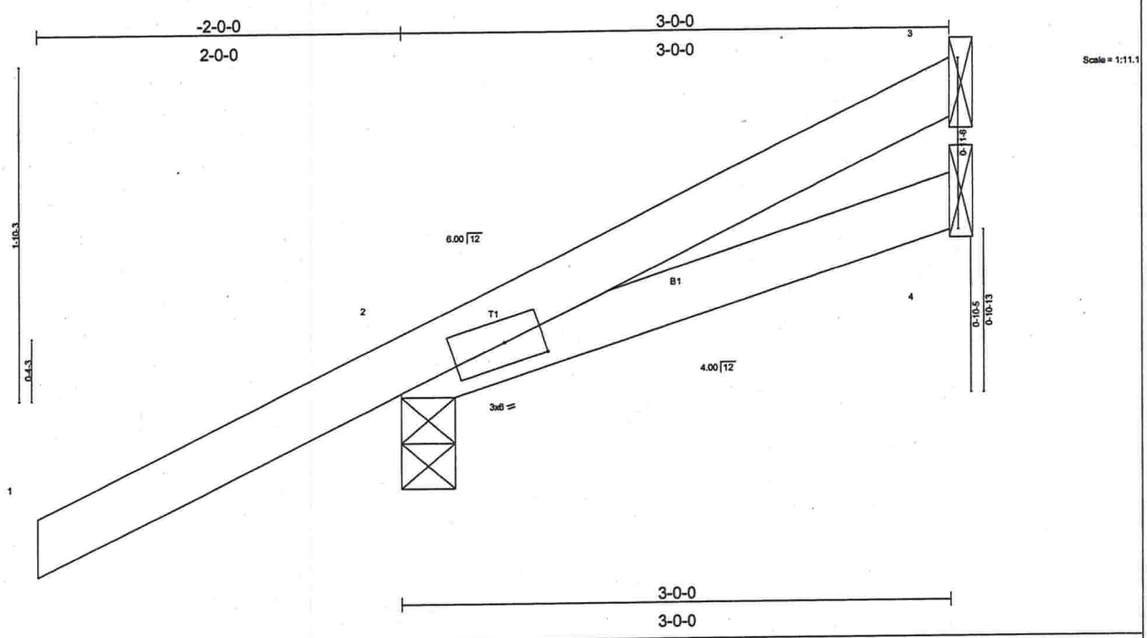

Plate Offsets (X,Y): [2:0-2-8,0-1-8]

LOADING (psf)		SPACING	2-0-0	CSI		DEFL	in	(loc)	l/defl	L/d	PLATES	GRIP
TCLL	20.0	Plates Increase	1.25	TC	0.29	Vert(LL)	-0.00	2-4	>999	240	MT20	244/190
TCDL	7.0	Lumber Increase	1.25	BC	0.06	Vert(TL)	-0.01	2-4	>999	180		
BCLL	10.0	Rep Stress Incr	YES	WB	0.00	Horz(TL)	-0.00	3	n/a	n/a		
BCDL	5.0	Code FBC2004/TPI2002		(Matrix)							Weight: 13 lb	

LUMBER
TOP CHORD 2 X 4 SYP No.2
BOT CHORD 2 X 4 SYP No.2

BRACING
TOP CHORD Structural wood sheathing directly applied or 3-0-0 oc purlins.
BOT CHORD Rigid ceiling directly applied or 10-0-0 oc bracing.

REACTIONS (lb/size) 3=31/Mechanical, 2=278/0-3-8, 4=42/Mechanical
Max Horz 2=131(load case 5)
Max Uplift3=-29(load case 6), 2=-201(load case 5)

FORCES (lb) - Maximum Compression/Maximum Tension
TOP CHORD 1-2=0/46, 2-3=-58/8
BOT CHORD 2-4=-11/11

NOTES
1) Wind: ASCE 7-02; 110mph (3-second gust); h=20ft; TCDL=4.2psf; BCDL=3.0psf; Category II; Exp B; enclosed; MWFRS gable end zone and C-C Exterior(2) zone; Lumber DOL=1.60 plate grip DOL=1.60. This truss is designed for C-C for members and forces, and for MWFRS for reactions specified.
2) Refer to girder(s) for truss to truss connections.
3) Bearing at joint(s) 2 considers parallel to grain value using ANSI/TPI 1 angle to grain formula. Building designer should verify capacity of bearing surface.
4) Provide mechanical connection (by others) of truss to bearing plate capable of withstanding 29 lb uplift at joint 3 and 201 lb uplift at joint 2.

LOAD CASE(S) Standard

NOVEMBER 03,2005 TRUSS DESIGN ENGINEER:
THOMAS E. MILLER PE 56877, BYRON K. ANDERSON PE 60987
STRUCTURAL ENGINEERING AND INSPECTIONS, INC. EB 9196
16105 N. FLORIDA AVE. STE B, LUTZ, FL 33549

Job	Truss	Truss Type	Qty	Ply	BRYAN ZECHER- LOT 94 EMERALD COVE
L138287	CJ5	MONO TRUSS	6	1	Dwg.#1103051137 Job Reference (optional)

Builders FirstSource, Lake City, Fl 32055 — 6.200 s Jul 13 2005 MiTek Industries, Inc. Wed Nov 02 09:02:22 2005 Page 1

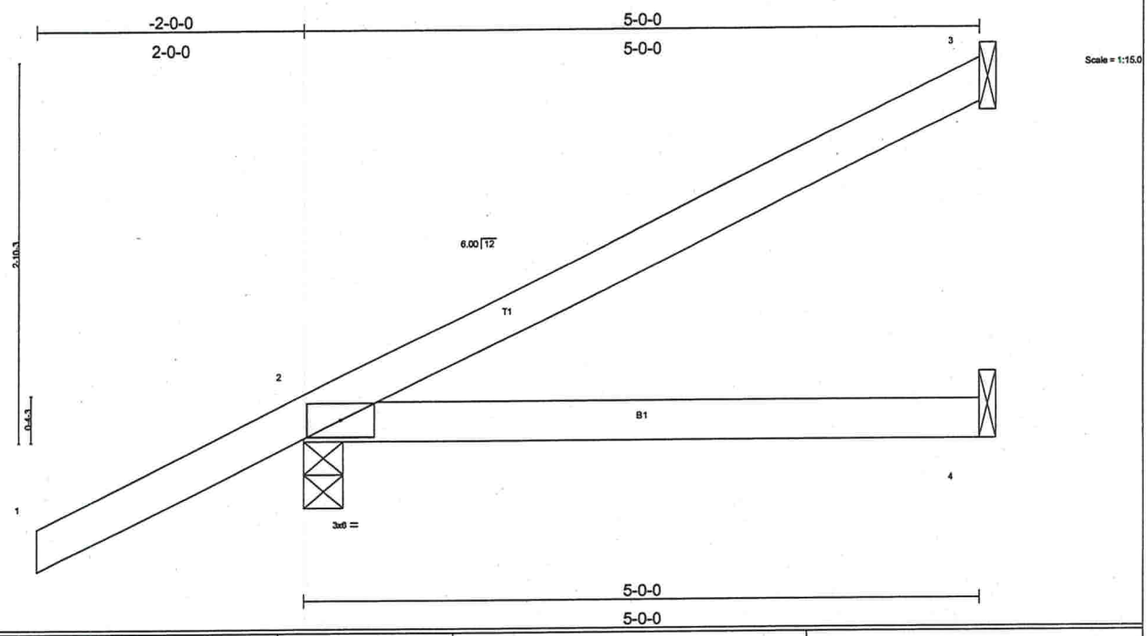

LOADING (psf)		SPACING	2-0-0	CSI		DEFL	in	(loc)	l/defl	L/d	PLATES	GRIP
TCLL	20.0	Plates Increase	1.25	TC	0.29	Vert(LL)	-0.03	2-4	>999	240	MT20	244/190
TCDL	7.0	Lumber Increase	1.25	BC	0.16	Vert(TL)	-0.05	2-4	>999	180		
BCLL	10.0	Rep Stress Incr	YES	WB	0.00	Horz(TL)	-0.00	3	n/a	n/a		
BCDL	5.0	Code FBC2004/TPI2002		(Matrix)							Weight: 19 lb	

LUMBER
TOP CHORD 2 X 4 SYP No.2
BOT CHORD 2 X 4 SYP No.2

BRACING
TOP CHORD Structural wood sheathing directly applied or 5-0-0 oc purlins.
BOT CHORD Rigid ceiling directly applied or 10-0-0 oc bracing.

REACTIONS (lb/size) 3=103/Mechanical, 2=343/0-3-8, 4=72/Mechanical
Max Horz 2=178(load case 5)
Max Uplift3=-87(load case 5), 2=-199(load case 5)

FORCES (lb) - Maximum Compression/Maximum Tension
TOP CHORD 1-2=0/47, 2-3=-88/36
BOT CHORD 2-4=0/0

NOTES
1) Wind: ASCE 7-02; 110mph (3-second gust); h=20ft; TCDL=4.2psf; BCDL=3.0psf; Category II; Exp B; enclosed; MWFRS gable end zone and C-C Exterior(2) zone; Lumber DOL=1.60 plate grip DOL=1.60. This truss is designed for C-C for members and forces, and for MWFRS for reactions specified.
2) Refer to girder(s) for truss to truss connections.
3) Provide mechanical connection (by others) of truss to bearing plate capable of withstanding 87 lb uplift at joint 3 and 199 lb uplift at joint 2.

LOAD CASE(S) Standard

NOVEMBER 03,2005 TRUSS DESIGN ENGINEER:
THOMAS E. MILLER PE 56877, BYRON K. ANDERSON PE 60987
STRUCTURAL ENGINEERING AND INSPECTIONS, INC. EB 9196
16105 N. FLORIDA AVE. STE B, LUTZ, FL 33549

Job	Truss	Truss Type	Qty	Ply	BRYAN ZECHER- LOT 94 EMERALD COVE
L138287	CJ5A	MONO SCISSOR	2	1	Dwg.#1103051138 Job Reference (optional)

Builders FirstSource, Lake City, Fl 32055 — 6.200 s Jul 13 2005 MiTek Industries, Inc. Wed Nov 02 09:02:23 2005 Page 1

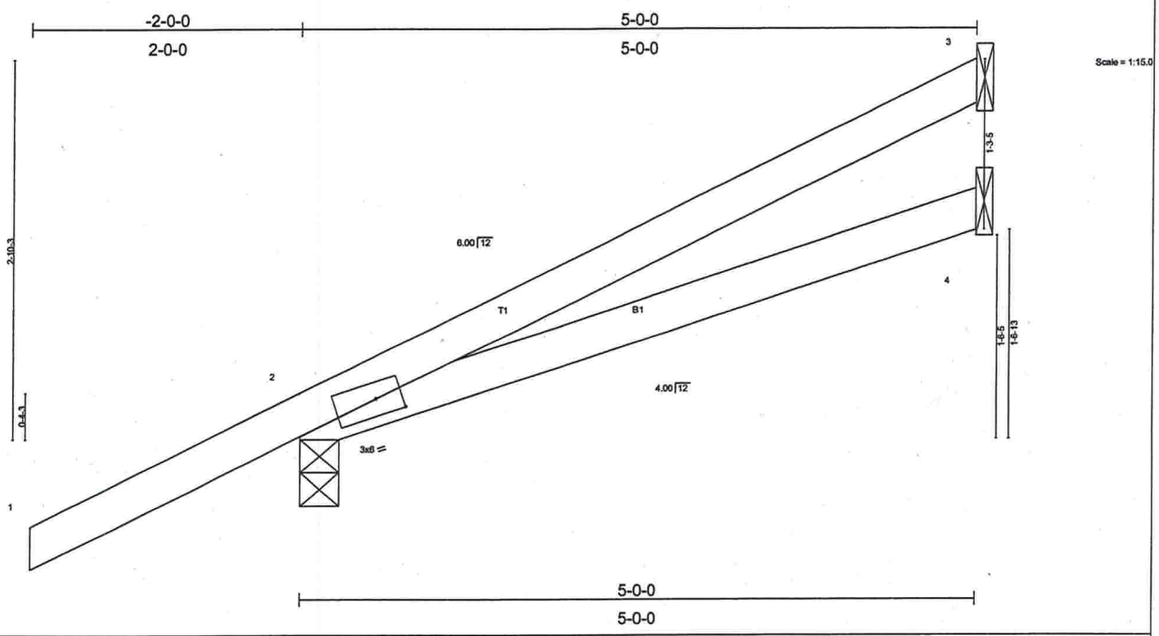

Plate Offsets (X,Y): [2:0-2-4,0-1-8]

LOADING (psf)		SPACING	2-0-0	CSI		DEFL	in	(loc)	l/defl	L/d	PLATES	GRIP
TCLL	20.0	Plates Increase	1.25	TC	0.29	Vert(LL)	-0.03	2-4	>999	240	MT20	244/190
TCDL	7.0	Lumber Increase	1.25	BC	0.16	Vert(TL)	-0.05	2-4	>999	180		
BCLL	10.0	Rep Stress Incr	YES	WB	0.00	Horz(TL)	-0.00	3	n/a	n/a		
BCDL	5.0	Code FBC2004/TPI2002		(Matrix)							Weight: 20 lb	

LUMBER
TOP CHORD 2 X 4 SYP No.2
BOT CHORD 2 X 4 SYP No.2

BRACING
TOP CHORD Structural wood sheathing directly applied or 5-0-0 oc purlins.
BOT CHORD Rigid ceiling directly applied or 10-0-0 oc bracing.

REACTIONS (lb/size) 3=103/Mechanical, 2=343/0-3-8, 4=72/Mechanical
Max Horz 2=177(load case 5)
Max Uplift3=-89(load case 5), 2=-198(load case 5)

FORCES (lb) - Maximum Compression/Maximum Tension
TOP CHORD 1-2=0/46, 2-3=-90/36
BOT CHORD 2-4=-18/18

NOTES
1) Wind: ASCE 7-02; 110mph (3-second gust); h=20ft; TCDL=4.2psf; BCDL=3.0psf; Category II; Exp B; enclosed; MWFRS gable end zone and C-C Exterior(2) zone; Lumber DOL=1.60 plate grip DOL=1.60. This truss is designed for C-C for members and forces, and for MWFRS for reactions specified.
2) Refer to girder(s) for truss to truss connections.
3) Bearing at joint(s) 2 considers parallel to grain value using ANSI/TPI 1 angle to grain formula. Building designer should verify capacity of bearing surface.
4) Provide mechanical connection (by others) of truss to bearing plate capable of withstanding 89 lb uplift at joint 3 and 198 lb uplift at joint 2.

LOAD CASE(S) Standard

NOVEMBER 03,2005 TRUSS DESIGN ENGINEER:
THOMAS E. MILLER PE 56877, BYRON K. ANDERSON PE 60987
STRUCTURAL ENGINEERING AND INSPECTIONS, INC. EB 9196
16105 N. FLORIDA AVE. STE B, LUTZ, FL 33549

Job	Truss	Truss Type	Qty	Ply	BRYAN ZECHER- LOT 94 EMERALD COVE
L138287	EJ5	MONO TRUSS	2	1	Dwg.#1103051139 Job Reference (optional)

Builders FirstSource, Lake City, Fl 32055 — 6.200 s Jul 13 2005 MiTek Industries, Inc. Wed Nov 02 09:02:23 2005 Page 1

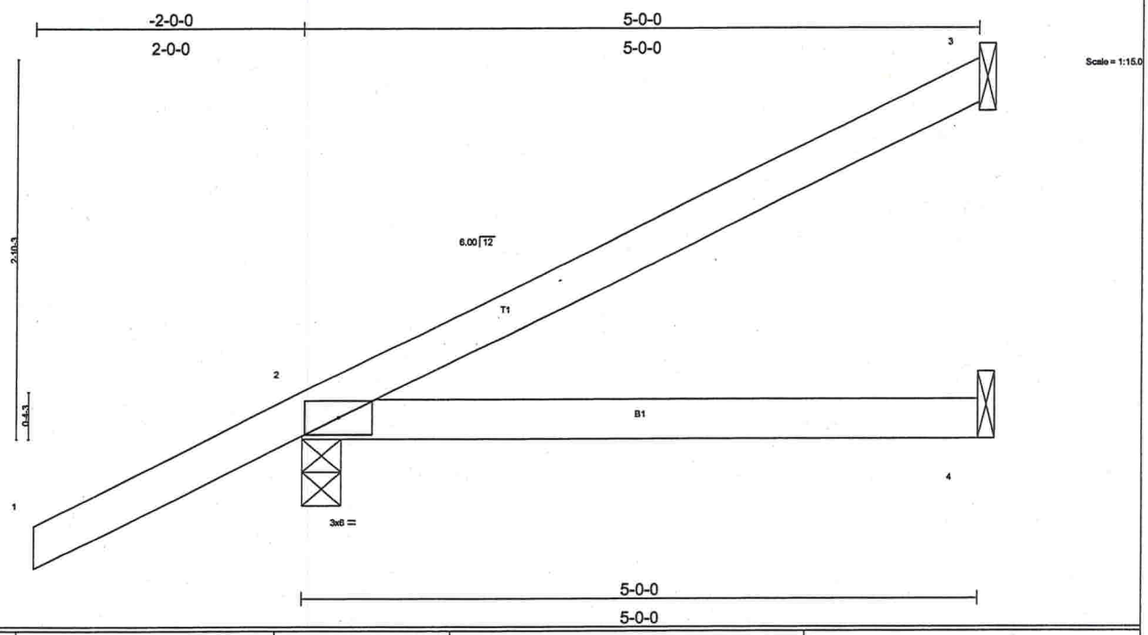

LOADING (psf)		SPACING	2-0-0	CSI		DEFL	in	(loc)	l/defl	L/d	PLATES	GRIP
TCLL	20.0	Plates Increase	1.25	TC	0.29	Vert(LL)	-0.03	2-4	>999	240	MT20	244/190
TCDL	7.0	Lumber Increase	1.25	BC	0.16	Vert(TL)	-0.05	2-4	>999	180		
BCLL	10.0	Rep Stress Incr	YES	WB	0.00	Horz(TL)	-0.00	3	n/a	n/a		
BCDL	5.0	Code FBC2004/TPI2002		(Matrix)							Weight: 19 lb	

LUMBER
TOP CHORD 2 X 4 SYP No.2
BOT CHORD 2 X 4 SYP No.2

BRACING
TOP CHORD Structural wood sheathing directly applied or 5-0-0 oc purlins.
BOT CHORD Rigid ceiling directly applied or 10-0-0 oc bracing.

REACTIONS (lb/size) 3=103/Mechanical, 2=343/0-3-8, 4=72/Mechanical
Max Horz 2=178(load case 5)
Max Uplift3=-87(load case 5), 2=-199(load case 5)

FORCES (lb) - Maximum Compression/Maximum Tension
TOP CHORD 1-2=0/47, 2-3=-88/36
BOT CHORD 2-4=0/0

NOTES
1) Wind: ASCE 7-02; 110mph (3-second gust); h=20ft; TCDL=4.2psf; BCDL=3.0psf; Category II; Exp B; enclosed; MWFRS gable end zone and C-C Exterior(2) zone; Lumber DOL=1.60 plate grip DOL=1.60. This truss is designed for C-C for members and forces, and for MWFRS for reactions specified.
2) Refer to girder(s) for truss to truss connections.
3) Provide mechanical connection (by others) of truss to bearing plate capable of withstanding 87 lb uplift at joint 3 and 199 lb uplift at joint 2.

LOAD CASE(S) Standard

NOVEMBER 03,2005 TRUSS DESIGN ENGINEER:
THOMAS E. MILLER PE 56877, BYRON K. ANDERSON PE 60987
STRUCTURAL ENGINEERING AND INSPECTIONS, INC. EB 9196
16105 N. FLORIDA AVE. STE B, LUTZ, FL 33549

Job	Truss	Truss Type	Qty	Ply	BRYAN ZECHER- LOT 94 EMERALD COVE
L138287	EJ7	MONO TRUSS	19	1	Dwg.#1103051140 Job Reference (optional)

Builders FirstSource, Lake City, Fl 32055 — 6.200 s Jul 13 2005 MiTek Industries, Inc. Wed Nov 02 09:02:24 2005 Page 1

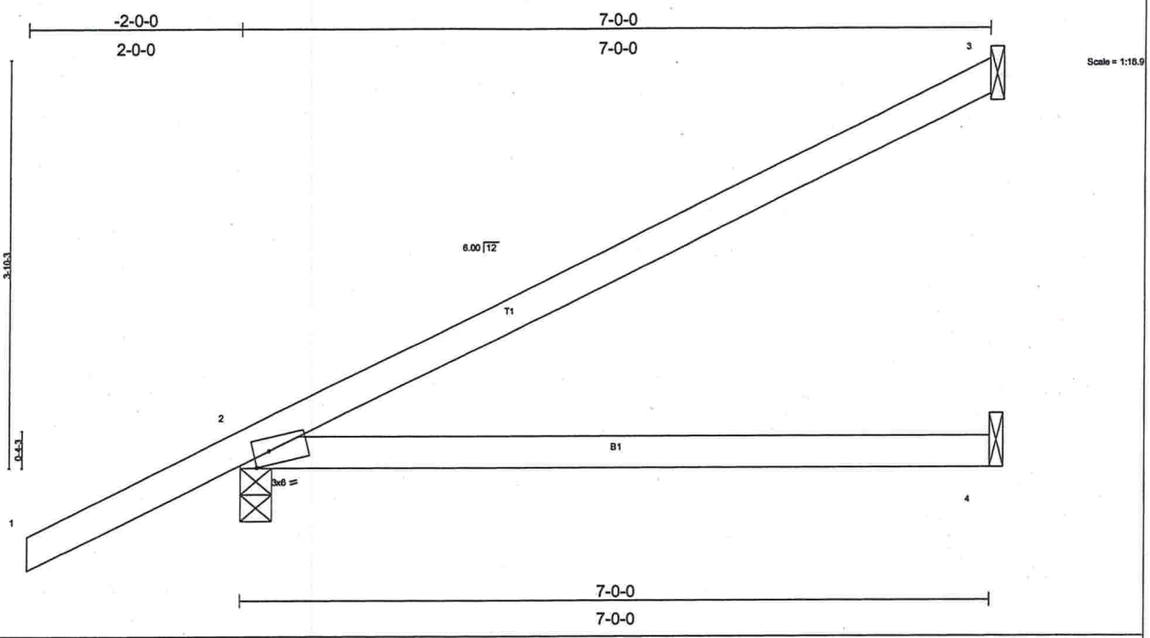

Plate Offsets (X,Y): [2:0-1-12,Edge]

LOADING (psf)		SPACING	2-0-0	CSI		DEFL	in	(loc)	l/defl	L/d	PLATES	GRIP
TCLL	20.0	Plates Increase	1.25	TC	0.48	Vert(LL)	-0.12	2-4	>664	240	MT20	244/190
TCDL	7.0	Lumber Increase	1.25	BC	0.35	Vert(TL)	-0.21	2-4	>397	180		
BCLL	10.0	Rep Stress Incr	YES	WB	0.00	Horz(TL)	-0.00	3	n/a	n/a		
BCDL	5.0	Code FBC2004/TPI2002		(Matrix)							Weight: 26 lb	

LUMBER
TOP CHORD 2 X 4 SYP No.2
BOT CHORD 2 X 4 SYP No.2

BRACING
TOP CHORD Structural wood sheathing directly applied or 6-0-0 oc purlins.
BOT CHORD Rigid ceiling directly applied or 10-0-0 oc bracing.

REACTIONS (lb/size) 3=162/Mechanical, 2=419/0-3-8, 4=104/Mechanical
Max Horz 2=224(load case 5)
Max Uplift3=-134(load case 5), 2=-210(load case 5)

FORCES (lb) - Maximum Compression/Maximum Tension
TOP CHORD 1-2=0/47, 2-3=-119/58
BOT CHORD 2-4=0/0

NOTES
1) Wind: ASCE 7-02; 110mph (3-second gust); h=20ft; TCDL=4.2psf; BCDL=3.0psf; Category II; Exp B; enclosed; MWFRS gable end zone and C-C Exterior(2) zone; Lumber DOL=1.60 plate grip DOL=1.60. This truss is designed for C-C for members and forces, and for MWFRS for reactions specified.
2) Refer to girder(s) for truss to truss connections.
3) Provide mechanical connection (by others) of truss to bearing plate capable of withstanding 134 lb uplift at joint 3 and 210 lb uplift at joint 2.

LOAD CASE(S) Standard

NOVEMBER 03,2005 TRUSS DESIGN ENGINEER:
THOMAS E. MILLER PE 56877, BYRON K. ANDERSON PE 60987
STRUCTURAL ENGINEERING AND INSPECTIONS, INC. EB 9196
16105 N. FLORIDA AVE. STE B, LUTZ, FL 33549

Job	Truss	Truss Type	Qty	Ply	BRYAN ZECHER- LOT 94 EMERALD COVE
L138237	EJ7A	SPECIAL	8	1	Dwg.#1103051141 Job Reference (optional)

Builders FirstSource, Lake City, Fl 32055 — 6.200 s Jul 13 2005 MiTek Industries, Inc. Wed Nov 02 09:02:24 2005 Page 1

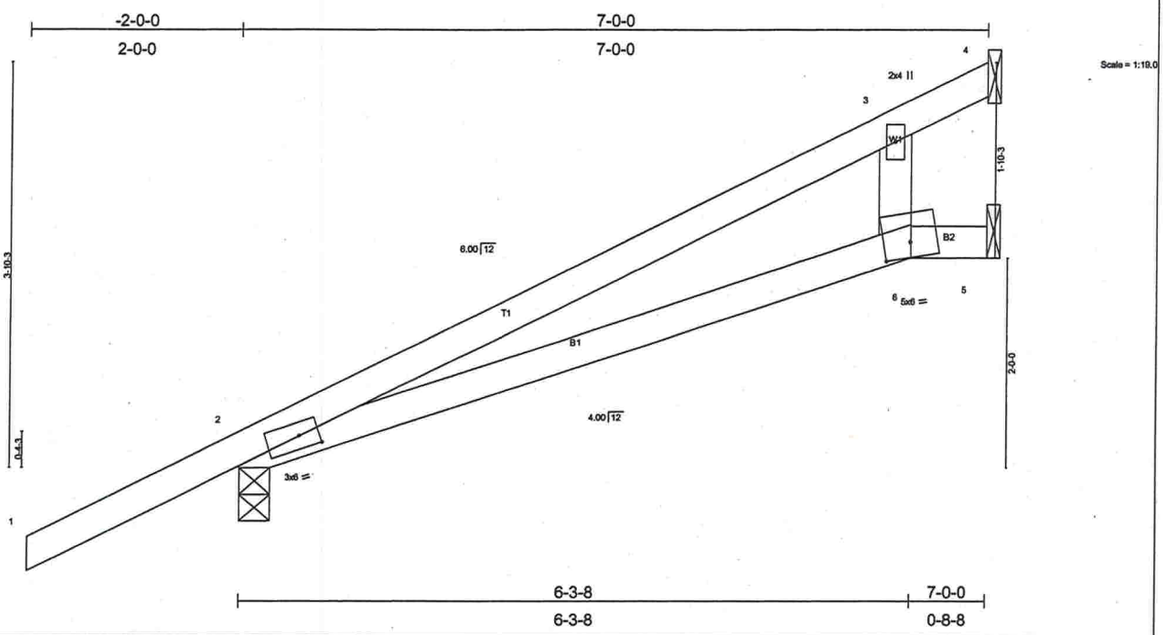

Plate Offsets (X,Y): [2:0-2-4,0-1-8], [6:0-3-0,0-1-12]

LOADING (psf)		SPACING	2-0-0	CSI		DEFL	in	(loc)	l/defl	L/d	PLATES	GRIP
TCLL	20.0	Plates Increase	1.25	TC	0.38	Vert(LL)	-0.15	2-6	>554	240	MT20	244/190
TCDL	7.0	Lumber Increase	1.25	BC	0.40	Vert(TL)	-0.24	2-6	>338	180		
BCLL	10.0	Rep Stress Incr	YES	WB	0.08	Horz(TL)	0.03	5	n/a	n/a		
BCDL	5.0	Code FBC2004/TPI2002		(Matrix)							Weight: 28 lb	

LUMBER
TOP CHORD 2 X 4 SYP No.2
BOT CHORD 2 X 4 SYP No.2
WEBS 2 X 4 SYP No.3

BRACING
TOP CHORD Structural wood sheathing directly applied or 6-0-0 oc purlins.
BOT CHORD Rigid ceiling directly applied or 6-0-0 oc bracing.

REACTIONS (lb/size) 4=39/Mechanical, 2=419/0-3-8, 5=228/Mechanical
Max Horz 2=223(load case 5)
Max Uplift2=-209(load case 5), 5=-179(load case 5)
Max Grav 4=52(load case 5), 2=419(load case 1), 5=228(load case 1)

FORCES (lb) - Maximum Compression/Maximum Tension
TOP CHORD 1-2=0/46, 2-3=-104/32, 3-4=-0/31
BOT CHORD 2-6=-39/33, 5-6=-1/2
WEBS 3-6=-141/310

NOTES
1) Wind: ASCE 7-02; 110mph (3-second gust); h=20ft; TCDL=4.2psf; BCDL=3.0psf; Category II; Exp B; enclosed; MWFRS gable end zone and C-C Exterior(2) zone; Lumber DOL=1.60 plate grip DOL=1.60. This truss is designed for C-C for members and forces, and for MWFRS for reactions specified.
2) Refer to girder(s) for truss to truss connections.
3) Bearing at joint(s) 2 considers parallel to grain value using ANSI/TPI 1 angle to grain formula. Building designer should verify capacity of bearing surface.
4) Provide mechanical connection (by others) of truss to bearing plate capable of withstanding 209 lb uplift at joint 2 and 179 lb uplift at joint 5.

LOAD CASE(S) Standard

NOVEMBER 03,2005 TRUSS DESIGN ENGINEER:
THOMAS E. MILLER PE 56877, BYRON K. ANDERSON PE 60987
STRUCTURAL ENGINEERING AND INSPECTIONS, INC. EB 9196
16105 N. FLORIDA AVE. STE B, LUTZ, FL 33549

Job	Truss	Truss Type	Qty	Ply	BRYAN ZECHER- LOT 94 EMERALD COVE
L138287	HJ5	MONO TRUSS	2	1	Dwg.#1103051142 Job Reference (optional)

Builders FirstSource, Lake City, Fl 32055 — 6.200 s Jul 13 2005 MiTek Industries, Inc. Wed Nov 02 09:02:25 2005 Page 1

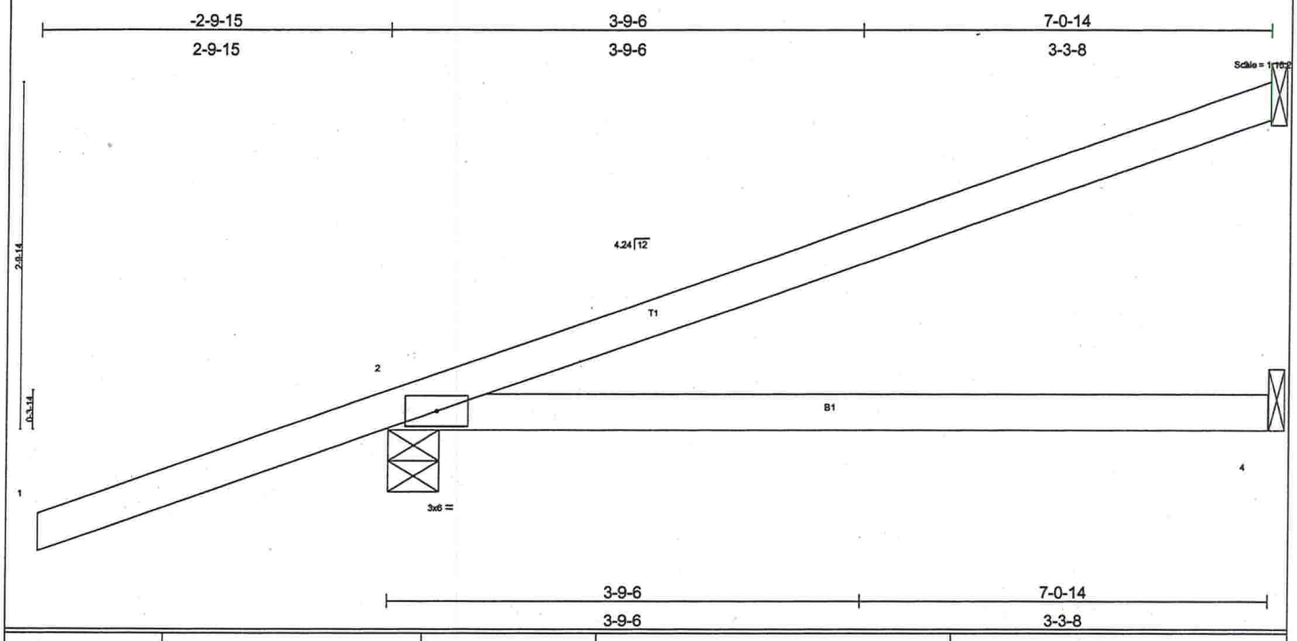

LOADING (psf)		SPACING	2-0-0	CSI		DEFL	in	(loc)	l/defl	L/d	PLATES	GRIP
TCLL	20.0	Plates Increase	1.25	TC	0.53	Vert(LL)	-0.08	2-4	>999	240	MT20	244/190
TCDL	7.0	Lumber Increase	1.25	BC	0.28	Vert(TL)	-0.13	2-4	>609	180		
BCLL	10.0	Rep Stress Incr	NO	WB	0.00	Horz(TL)	-0.00	3	n/a	n/a		
BCDL	5.0	Code FBC2004/TPI2002		(Matrix)							Weight: 26 lb	

LUMBER
TOP CHORD 2 X 4 SYP No.2
BOT CHORD 2 X 4 SYP No.2

BRACING
TOP CHORD Structural wood sheathing directly applied or 7-0-14 oc purlins.
BOT CHORD Rigid ceiling directly applied or 10-0-0 oc bracing.

REACTIONS (lb/size) 3=192/Mechanical, 2=375/0-4-15, 4=111/Mechanical
Max Horz 2=167(load case 2)
Max Uplift3=-145(load case 2), 2=-248(load case 2)

FORCES (lb) - Maximum Compression/Maximum Tension
TOP CHORD 1-2=0/50, 2-3=-68/45
BOT CHORD 2-4=0/0

NOTES
1) Wind: ASCE 7-02; 110mph (3-second gust); h=20ft; TCDL=4.2psf; BCDL=3.0psf; Category II; Exp B; enclosed; MWFRS gable end zone; Lumber DOL=1.60 plate grip DOL=1.60.
2) Refer to girder(s) for truss to truss connections.
3) Provide mechanical connection (by others) of truss to bearing plate capable of withstanding 145 lb uplift at joint 3 and 248 lb uplift at joint 2.
4) In the LOAD CASE(S) section, loads applied to the face of the truss are noted as front (F) or back (B).

LOAD CASE(S) Standard
1) Regular: Lumber Increase=1.25, Plate Increase=1.25
Uniform Loads (plf)
Vert: 1-2=-54
Trapezoidal Loads (plf)
Vert: 2=-3(F=26, B=26)-to-3=-95(F=-21, B=-21), 2=-0(F=15, B=15)-to-4=-53(F=-12, B=-12)

NOVEMBER 03,2005 TRUSS DESIGN ENGINEER:
THOMAS E. MILLER PE 56877, BYRON K. ANDERSON PE 60987
STRUCTURAL ENGINEERING AND INSPECTIONS, INC. EB 9196
16105 N. FLORIDA AVE. STE B, LUTZ, FL 33549

Job	Truss	Truss Type	Qty	Ply	BRYAN ZECHER- LOT 94 EMERALD COVE
L138287	HJ7	MONO TRUSS	3	1	Dwg.#1103051143 Job Reference (optional)

Builders FirstSource, Lake City, Fl 32055 — 6.200 s Jul 13 2005 MiTek Industries, Inc. Wed Nov 02 09:02:26 2005 Page 1

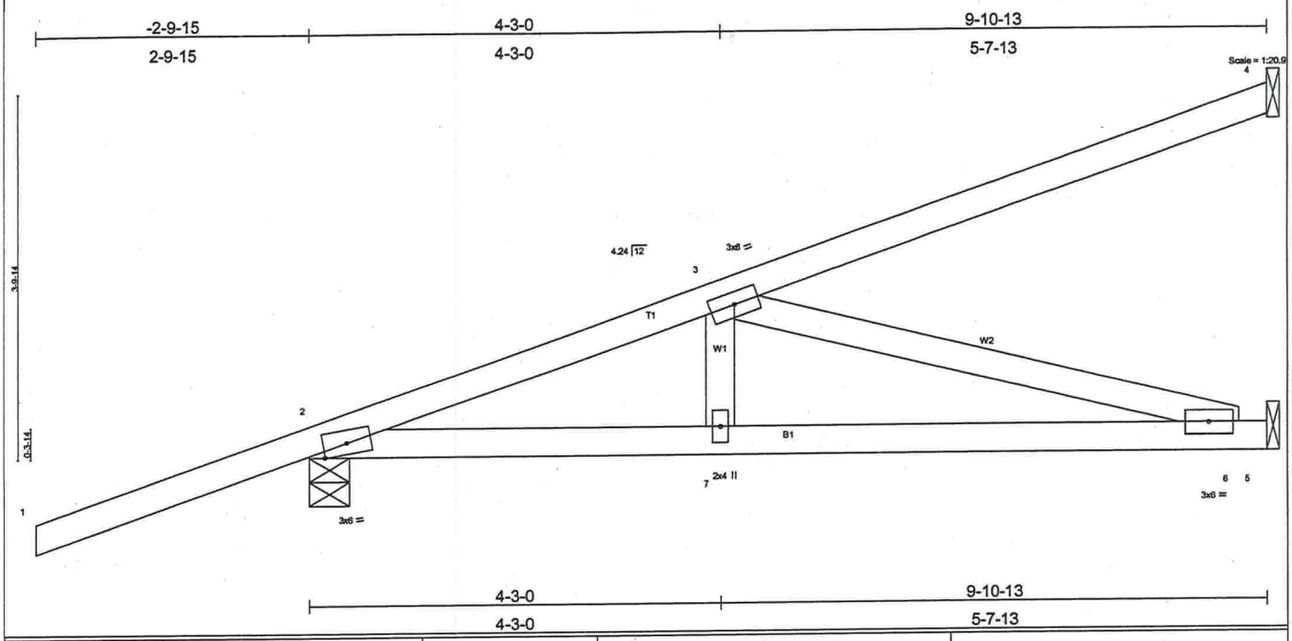

LOADING (psf)		SPACING	2-0-0	CSI		DEFL	in	(loc)	l/defl	L/d	PLATES	GRIP
TCLL	20.0	Plates Increase	1.25	TC	0.61	Vert(LL)	-0.10	6-7	>999	240	MT20	244/190
TCDL	7.0	Lumber Increase	1.25	BC	0.57	Vert(TL)	-0.17	6-7	>686	180		
BCLL	10.0	Rep Stress Incr	NO	WB	0.49	Horz(TL)	0.01	5	n/a	n/a		
BCDL	5.0	Code FBC2004/TPI2002		(Matrix)							Weight: 45 lb	

LUMBER
TOP CHORD 2 X 4 SYP No.2
BOT CHORD 2 X 4 SYP No.2
WEBS 2 X 4 SYP No.3

BRACING
TOP CHORD Structural wood sheathing directly applied or 6-0-0 oc purlins.
BOT CHORD Rigid ceiling directly applied or 10-0-0 oc bracing.

REACTIONS (lb/size) 4=269/Mechanical, 2=532/0-4-15, 5=377/Mechanical
Max Horz 2=269(load case 2)
Max Uplift4=-231(load case 2), 2=-278(load case 2), 5=-63(load case 2)

FORCES (lb) - Maximum Compression/Maximum Tension
TOP CHORD 1-2=0/50, 2-3=-888/121, 3-4=-105/66
BOT CHORD 2-7=-309/823, 6-7=-309/823, 5-6=0/0
WEBS 3-7=0/180, 3-6=-856/321

NOTES
1) Wind: ASCE 7-02; 110mph (3-second gust); h=20ft; TCDL=4.2psf; BCDL=3.0psf; Category II; Exp B; enclosed; MWFRS gable end zone; Lumber DOL=1.60 plate grip DOL=1.60.
2) Refer to girder(s) for truss to truss connections.
3) Provide mechanical connection (by others) of truss to bearing plate capable of withstanding 231 lb uplift at joint 4, 278 lb uplift at joint 2 and 63 lb uplift at joint 5.
4) In the LOAD CASE(S) section, loads applied to the face of the truss are noted as front (F) or back (B).

LOAD CASE(S) Standard
1) Regular: Lumber Increase=1.25, Plate Increase=1.25
Uniform Loads (plf)
Vert: 1-2=-54
Trapezoidal Loads (plf)
Vert: 2=-3(F=26, B=26)-to-4=-134(F=-40, B=-40), 2=-0(F=15, B=15)-to-5=-74(F=-22, B=-22)

NOVEMBER 03,2005 TRUSS DESIGN ENGINEER:
THOMAS E. MILLER PE 56877, BYRON K. ANDERSON PE 60987
STRUCTURAL ENGINEERING AND INSPECTIONS, INC. EB 9196
16105 N. FLORIDA AVE. STE B, LUTZ, FL 33549

Job	Truss	Truss Type	Qty	Ply	BRYAN ZECHER- LOT 94 EMERALD COVE
L138287	HJ7A	SPECIAL	1	1	Dwg.#1103051144 Job Reference (optional)

Builders FirstSource, Lake City, Fl 32055 — 6.200 s Jul 13 2005 MiTek Industries, Inc. Wed Nov 02 09:02:26 2005 Page 1

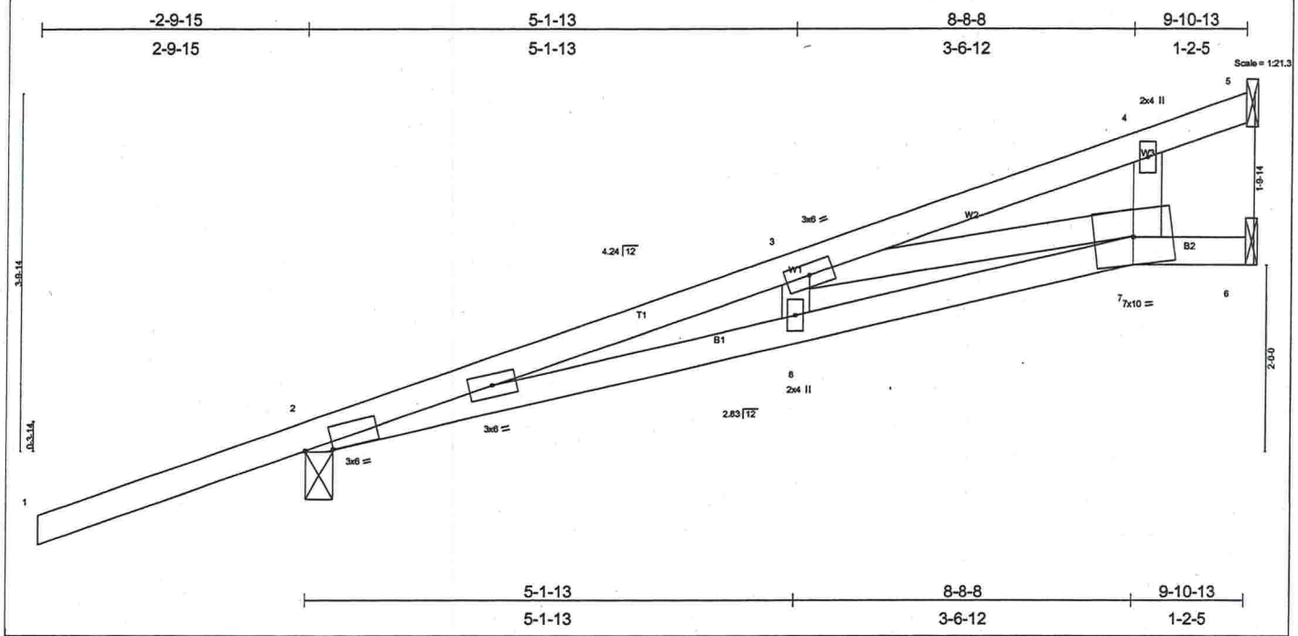

Plate Offsets (X,Y): [2:0-3-8,0-0-10]

LOADING (psf)		SPACING	2-0-0	CSI		DEFL	in	(loc)	l/defl	L/d	PLATES	GRIP
TCLL	20.0	Plates Increase	1.25	TC	0.69	Vert(LL)	-0.19	7-8	>601	240	MT20	244/190
TCDL	7.0	Lumber Increase	1.25	BC	0.93	Vert(TL)	-0.31	7-8	>375	180		
BCLL	10.0	Rep Stress Incr	NO	WB	0.47	Horz(TL)	0.07	6	n/a	n/a		
BCDL	5.0	Code FBC2004/TPI2002		(Matrix)							Weight: 43 lb	

LUMBER
TOP CHORD 2 X 4 SYP No.2
BOT CHORD 2 X 4 SYP No.2
WEBS 2 X 4 SYP No.3

BRACING
TOP CHORD Structural wood sheathing directly applied or 4-5-5 oc purlins.
BOT CHORD Rigid ceiling directly applied or 7-2-2 oc bracing.

REACTIONS (lb/size) 5=356/Mechanical, 2=527/0-3-8, 6=294/Mechanical
Max Horz 2=268(load case 2)
Max Uplift5=-157(load case 2), 2=-272(load case 2), 6=-140(load case 2)

FORCES (lb) - Maximum Compression/Maximum Tension
TOP CHORD 1-2=0/49, 2-3=-1850/514, 3-4=-114/0, 4-5=-59/114
BOT CHORD 2-8=-670/1761, 7-8=-672/1757, 6-7=0/0
WEBS 3-8=0/197, 3-7=-1694/669, 4-7=0/138

NOTES
1) Wind: ASCE 7-02; 110mph (3-second gust); h=20ft; TCDL=4.2psf; BCDL=3.0psf; Category II; Exp B; enclosed; MWFRS gable end zone; Lumber DOL=1.60 plate grip DOL=1.60.
2) Refer to girder(s) for truss to truss connections.
3) Bearing at joint(s) 2 considers parallel to grain value using ANSI/TPI 1 angle to grain formula. Building designer should verify capacity of bearing surface.
4) Provide mechanical connection (by others) of truss to bearing plate capable of withstanding 157 lb uplift at joint 5, 272 lb uplift at joint 2 and 140 lb uplift at joint 6.
5) In the LOAD CASE(S) section, loads applied to the face of the truss are noted as front (F) or back (B).

LOAD CASE(S) Standard
1) Regular: Lumber Increase=1.25, Plate Increase=1.25
Uniform Loads (plf)
Vert: 1-2=-54
Trapezoidal Loads (plf)
Vert: 2=-2(F=26, B=26)-to-5=-134(F=-40, B=-40), 2=0(F=15, B=15)-to-7=-66(F=-18, B=-18), 7=-66(F=-18, B=-18)-to-6=-74(F=-22, B=-22)

NOVEMBER 03,2005 TRUSS DESIGN ENGINEER:
THOMAS E. MILLER PE 56877, BYRON K. ANDERSON PE 60987
STRUCTURAL ENGINEERING AND INSPECTIONS, INC. EB 9196
16105 N. FLORIDA AVE. STE B, LUTZ, FL 33549

Job	Truss	Truss Type	Qty	Ply	BRYAN ZECHER- LOT 94 EMERALD COVE
L138287	T01	COMMON	5	1	Dwg.#1103051145 Job Reference (optional)

Builders FirstSource, Lake City, Fl 32055 — 6.200 s Jul 13 2005 MiTek Industries, Inc. Wed Nov 02 09:02:27 2005 Page 1

-2-0-0	3-9-13	9-9-12	15-9-11	19-7-8	21-7-8
2-0-0	3-9-13	5-11-15	5-11-15	3-9-13	2-0-0

Scale = 1:38.8

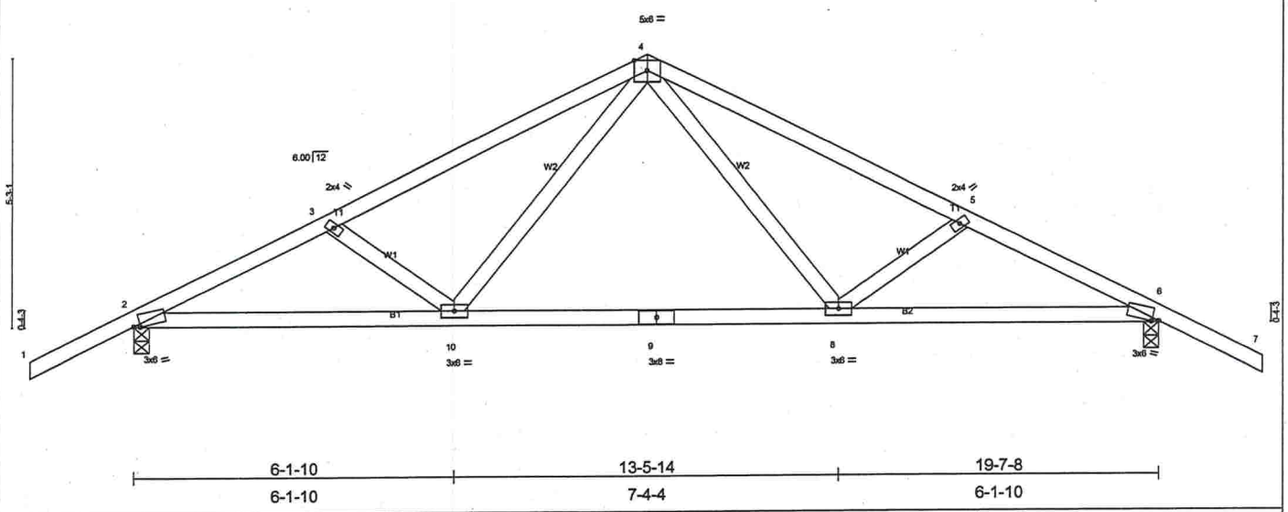

Plate Offsets (X,Y): [2:0-1-9,0-0-7], [6:0-1-9,0-0-7]

LOADING (psf)		SPACING	2-0-0	CSI		DEFL	in	(loc)	l/defl	L/d	PLATES	GRIP
TCLL	20.0	Plates Increase	1.25	TC	0.36	Vert(LL)	-0.25	8-10	>930	240	MT20	244/190
TCDL	7.0	Lumber Increase	1.25	BC	0.84	Vert(TL)	-0.40	8-10	>573	180		
BCLL	10.0	Rep Stress Incr	NO	WB	0.22	Horz(TL)	0.04	6	n/a	n/a		
BCDL	5.0	Code FBC2004/TPI2002		(Matrix)							Weight: 95 lb	

LUMBER
TOP CHORD 2 X 4 SYP No.2
BOT CHORD 2 X 4 SYP No.2
WEBS 2 X 4 SYP No.3

BRACING
TOP CHORD Structural wood sheathing directly applied or 4-6-3 oc purlins.
BOT CHORD Rigid ceiling directly applied or 8-2-5 oc bracing.

REACTIONS (lb/size) 2=1112/0-3-8, 6=1112/0-3-8
Max Horz 2=-107(load case 6)
Max Uplift2=-459(load case 5), 6=-459(load case 6)

FORCES (lb) - Maximum Compression/Maximum Tension
TOP CHORD 1-2=0/47, 2-3=-1848/803, 3-4=-1679/740, 4-5=-1679/740, 5-6=-1848/803, 6-7=0/47
BOT CHORD 2-10=-567/1590, 9-10=-275/1046, 8-9=-275/1046, 6-8=-567/1590
WEBS 3-10=-216/201, 4-10=-222/686, 4-8=-222/686, 5-8=-216/201

NOTES
1) Unbalanced roof live loads have been considered for this design.
2) Wind: ASCE 7-02; 110mph (3-second gust); h=20ft; TCDL=4.2psf; BCDL=3.0psf; Category II; Exp B; enclosed; MWFRS gable end zone and C-C Exterior(2) zone; Lumber DOL=1.60 plate grip DOL=1.60. This truss is designed for C-C for members and forces, and for MWFRS for reactions specified.
3) Provide mechanical connection (by others) of truss to bearing plate capable of withstanding 459 lb uplift at joint 2 and 459 lb uplift at joint 6.
4) In the LOAD CASE(S) section, loads applied to the face of the truss are noted as front (F) or back (B).

LOAD CASE(S) Standard
1) Regular: Lumber Increase=1.25, Plate Increase=1.25
Uniform Loads (plf)
Vert: 2-10=-30, 8-10=-80(F=-50), 6-8=-30, 1-4=-54, 4-7=-54

NOVEMBER 03,2005 TRUSS DESIGN ENGINEER:
THOMAS E. MILLER PE 56877, BYRON K. ANDERSON PE 60987
STRUCTURAL ENGINEERING AND INSPECTIONS, INC. EB 9196
16105 N. FLORIDA AVE. STE B, LUTZ, FL 33549

Job	Truss	Truss Type	Qty	Ply	BRYAN ZECHER- LOT 94 EMERALD COVE
L138287	T02	MONO HIP	1	1	Dwg.#1103051146 Job Reference (optional)

Builders FirstSource, Lake City, Fl 32055

6.200 s Jul 13 2005 MiTek Industries, Inc. Wed Nov 02 09:02:27 2005 Page 1

-2-0-0	7-0-0	13-5-15	19-10-1	26-4-0
2-0-0	7-0-0	6-5-15	6-4-3	6-5-15

Scale: 1/4"=1'

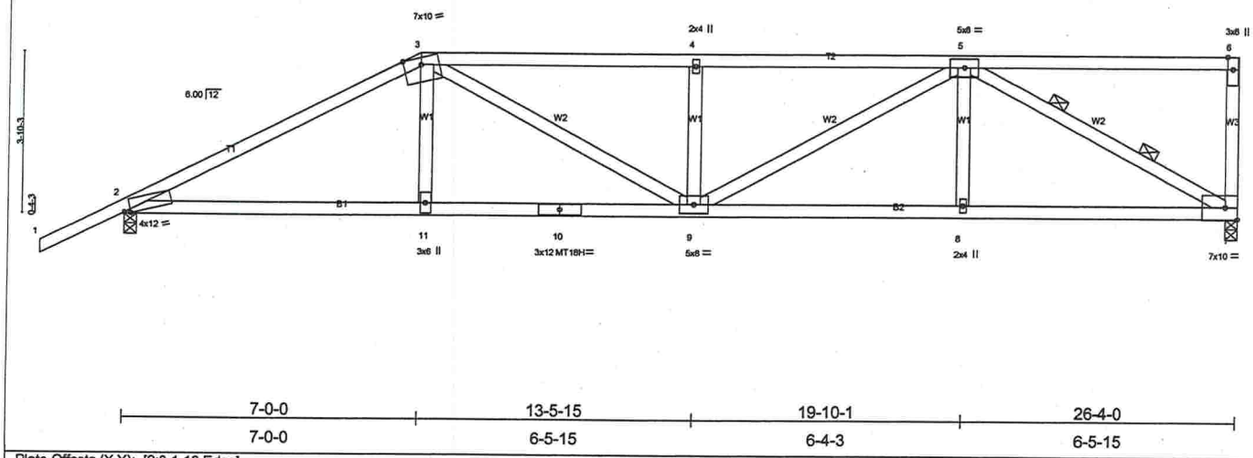

7-0-0	13-5-15	19-10-1	26-4-0
7-0-0	6-5-15	6-4-3	6-5-15

Plate Offsets (X,Y): [2:0-1-13,Edge]

LOADING (psf)		SPACING	2-0-0	CSI		DEFL	in	(loc)	l/defl	L/d	PLATES	GRIP
TCLL	20.0	Plates Increase	1.25	TC	0.94	Vert(LL)	-0.32	9-11	>979	240	MT20	244/190
TCDL	7.0	Lumber Increase	1.25	BC	0.94	Vert(TL)	-0.52	9-11	>604	180	MT18H	244/190
BCLL	10.0	Rep Stress Incr	NO	WB	0.87	Horz(TL)	0.14	7	n/a	n/a		
BCDL	5.0	Code FBC2004/TPI2002		(Matrix)							Weight: 133 lb	

LUMBER
TOP CHORD 2 X 4 SYP No.2
BOT CHORD 2 X 4 SYP No.2 *Except*
B2 2 X 4 SYP No.1D
WEBS 2 X 4 SYP No.3 *Except*
W3 2 X 4 SYP No.2

BRACING
TOP CHORD Structural wood sheathing directly applied, except end verticals.
BOT CHORD Rigid ceiling directly applied or 4-10-9 oc bracing.
WEBS 2 Rows at 1/3 pts 5-7

REACTIONS (lb/size) 7=2431/0-3-8, 2=2304/0-3-8
Max Horz 2=227(load case 4)
Max Uplift7=-1094(load case 3), 2=-993(load case 4)

FORCES (lb) - Maximum Compression/Maximum Tension
TOP CHORD 1-2=0/47, 2-3=-4309/1821, 3-4=-4702/2113, 4-5=-4701/2114, 5-6=-154/72, 6-7=-362/287
BOT CHORD 2-11=-1667/3765, 10-11=-1675/3800, 9-10=-1675/3800, 8-9=-1557/3465, 7-8=-1557/3465
WEBS 3-11=-214/863, 3-9=-565/1027, 4-9=-761/645, 5-9=-638/1417, 5-8=0/406, 5-7=-3795/1703

NOTES
1) Wind: ASCE 7-02; 110mph (3-second gust); h=20ft; TCDL=4.2psf; BCDL=3.0psf; Category II; Exp B; enclosed; MWFRS gable end zone; Lumber DOL=1.60 plate grip DOL=1.60.
2) Provide adequate drainage to prevent water ponding.
3) All plates are MT20 plates unless otherwise indicated.
4) Provide mechanical connection (by others) of truss to bearing plate capable of withstanding 1094 lb uplift at joint 7 and 993 lb uplift at joint 2.
5) Girder carries hip end with 0-0-0 right side setback, 7-0-0 left side setback, and 7-0-0 end setback.
6) Hanger(s) or other connection device(s) shall be provided sufficient to support concentrated load(s) 539 lb down and 277 lb up at 7-0-0 on bottom chord. The design/selection of such connection device(s) is the responsibility of others.
7) In the LOAD CASE(S) section, loads applied to the face of the truss are noted as front (F) or back (B).

LOAD CASE(S) Standard
1) Regular: Lumber Increase=1.25, Plate Increase=1.25
Uniform Loads (plf)
Vert: 1-3=-54, 3-6=-118(F=-64), 2-11=-30, 7-11=-65(F=-35)
Concentrated Loads (lb)
Vert: 11=-539(F)

NOVEMBER 03,2005 TRUSS DESIGN ENGINEER:
THOMAS E. MILLER PE 56877, BYRON K. ANDERSON PE 60987
STRUCTURAL ENGINEERING AND INSPECTIONS, INC. EB 9196
16105 N. FLORIDA AVE. STE B, LUTZ, FL 33549

Job	Truss	Truss Type	Qty	Ply	BRYAN ZECHER- LOT 94 EMERALD COVE
L138287	T03	MONO HIP	1	1	Dwg.#1103051147 Job Reference (optional)

Builders FirstSource, Lake City, Fl 32055 — 6.200 s Jul 13 2005 MiTek Industries, Inc. Wed Nov 02 09:02:28 2005 Page 1

-2-0-0	4-9-4	9-0-0	14-8-3	20-4-5	26-4-0
2-0-0	4-9-4	4-2-12	5-8-3	5-8-3	5-11-11

Scale: 1/4"=1'

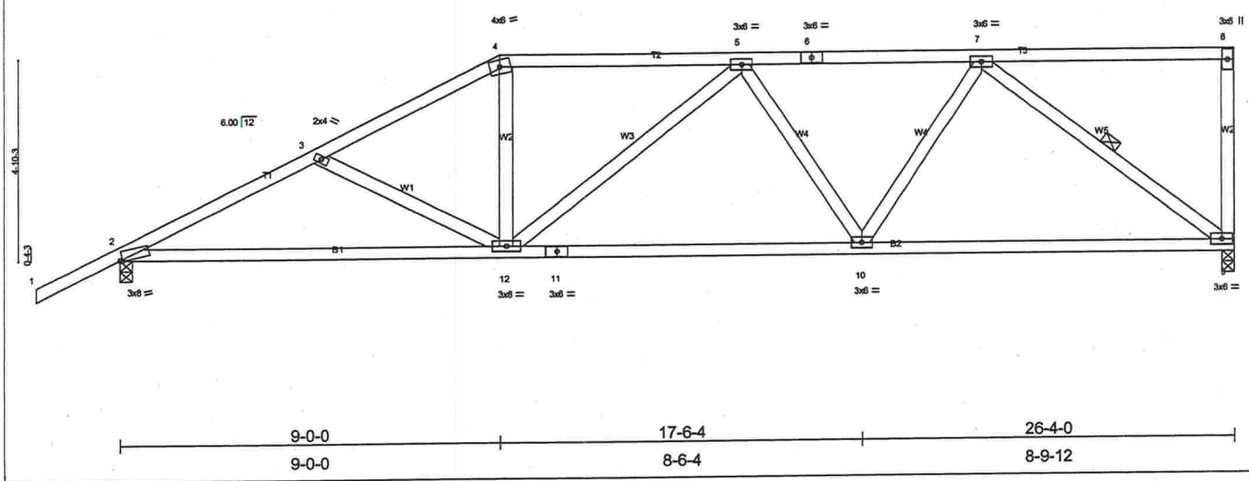

9-0-0	17-6-4	26-4-0
9-0-0	8-6-4	8-9-12

Plate Offsets (X,Y): [2:0-0-10,Edge]

LOADING (psf)		SPACING	2-0-0	CSI		DEFL	in	(loc)	l/defl	L/d	PLATES	GRIP
TCLL	20.0	Plates Increase	1.25	TC	0.55	Vert(LL)	-0.16	2-12	>999	240	MT20	244/190
TCDL	7.0	Lumber Increase	1.25	BC	0.54	Vert(TL)	-0.28	2-12	>999	180		
BCLL	10.0	Rep Stress Incr	YES	WB	0.38	Horz(TL)	0.06	9	n/a	n/a		
BCDL	5.0	Code FBC2004/TPI2002		(Matrix)							Weight: 139 lb	

LUMBER
TOP CHORD 2 X 4 SYP No.2
BOT CHORD 2 X 4 SYP No.2
WEBS 2 X 4 SYP No.3

BRACING
TOP CHORD Structural wood sheathing directly applied or 4-3-10 oc purlins, except end verticals.
BOT CHORD Rigid ceiling directly applied or 6-11-8 oc bracing.
WEBS 1 Row at midpt 7-9

REACTIONS (lb/size) 9=1089/0-3-8, 2=1214/0-3-8
Max Horz 2=272(load case 5)
Max Uplift9=-396(load case 4), 2=-442(load case 5)

FORCES (lb) - Maximum Compression/Maximum Tension
TOP CHORD 1-2=0/47, 2-3=-1908/743, 3-4=-1670/641, 4-5=-1463/629, 5-6=-1403/557, 6-7=-1403/557, 7-8=-59/10, 8-9=-153/102
BOT CHORD 2-12=-809/1658, 11-12=-669/1549, 10-11=-669/1549, 9-10=-477/1095
WEBS 3-12=-236/204, 4-12=-66/449, 5-12=-113/162, 5-10=-278/213, 7-10=-150/581, 7-9=-1315/593

NOTES
1) Wind: ASCE 7-02; 110mph (3-second gust); h=20ft; TCDL=4.2psf; BCDL=3.0psf; Category II; Exp B; enclosed; MWFRS gable end zone and C-C Exterior(2) zone; Lumber DOL=1.60 plate grip DOL=1.60. This truss is designed for C-C for members and forces, and for MWFRS for reactions specified.
2) Provide adequate drainage to prevent water ponding.
3) Provide mechanical connection (by others) of truss to bearing plate capable of withstanding 396 lb uplift at joint 9 and 442 lb uplift at joint 2.

LOAD CASE(S) Standard

NOVEMBER 03,2005 TRUSS DESIGN ENGINEER:
THOMAS E. MILLER PE 56877, BYRON K. ANDERSON PE 60987
STRUCTURAL ENGINEERING AND INSPECTIONS, INC. EB 9196
16105 N. FLORIDA AVE. STE B, LUTZ, FL 33549

Job	Truss	Truss Type	Qty	Ply	BRYAN ZECHER- LOT 94 EMERALD COVE
L138287	T04	MONO HIP	1	1	Dwg.#1103051148 Job Reference (optional)

Builders FirstSource, Lake City, Fl 32055 — 6.200 s Jul 13 2005 MiTek Industries, Inc. Wed Nov 02 09:02:29 2005 Page 1

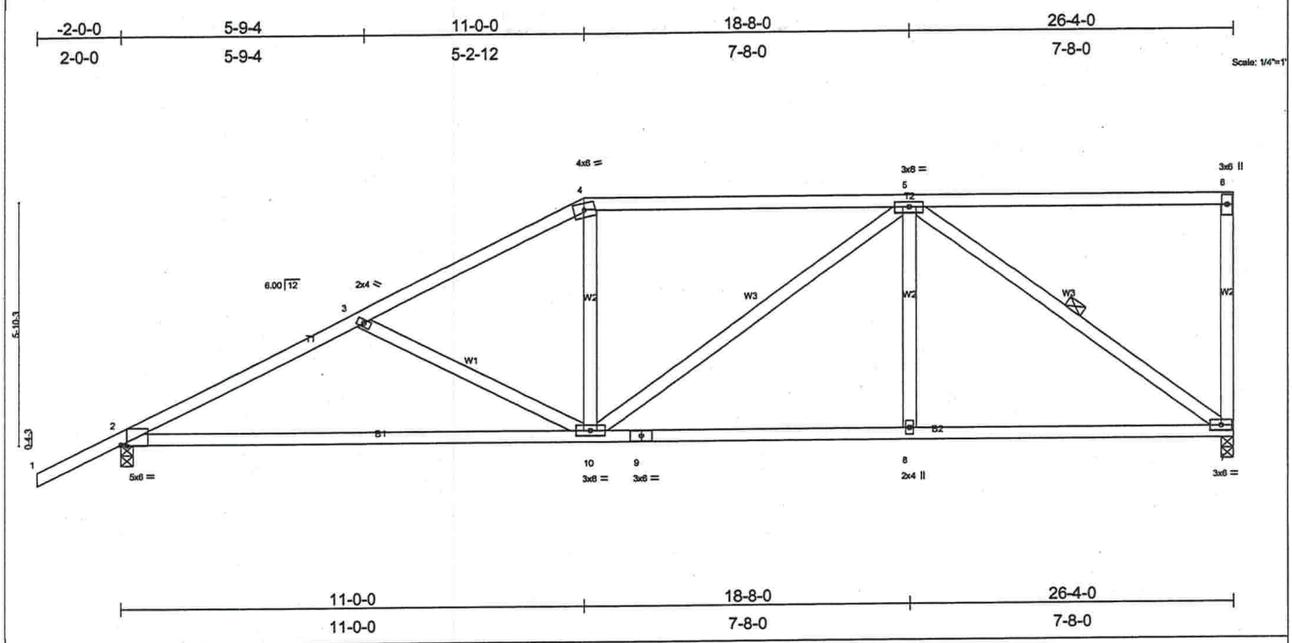

Plate Offsets (X,Y): [2:0-1-11,Edge]

LOADING (psf)		SPACING	2-0-0	CSI		DEFL	in	(loc)	l/defl	L/d	PLATES	GRIP
TCLL	20.0	Plates Increase	1.25	TC	0.61	Vert(LL)	-0.34	2-10	>922	240	MT20	244/190
TCDL	7.0	Lumber Increase	1.25	BC	0.69	Vert(TL)	-0.58	2-10	>535	180		
BCLL	10.0	Rep Stress Incr	YES	WB	0.55	Horz(TL)	0.06	7	n/a	n/a		
BCDL	5.0	Code FBC2004/TPI2002		(Matrix)							Weight: 143 lb	

LUMBER
TOP CHORD 2 X 4 SYP No.2
BOT CHORD 2 X 4 SYP No.2
WEBS 2 X 4 SYP No.3

BRACING
TOP CHORD Structural wood sheathing directly applied or 4-0-12 oc purlins, except end verticals.
BOT CHORD Rigid ceiling directly applied or 6-10-3 oc bracing.
WEBS 1 Row at midpt 5-7

REACTIONS (lb/size) 7=1089/0-3-8, 2=1214/0-3-8
Max Horz 2=318(load case 5)
Max Uplift7=-388(load case 4), 2=-450(load case 5)

FORCES (lb) - Maximum Compression/Maximum Tension
TOP CHORD 1-2=0/47, 2-3=-1841/728, 3-4=-1526/585, 4-5=-1317/588, 5-6=-52/19, 6-7=-185/131
BOT CHORD 2-10=-836/1602, 9-10=-485/1118, 8-9=-485/1118, 7-8=-485/1118
WEBS 3-10=-329/279, 4-10=0/309, 5-10=-131/246, 5-8=0/202, 5-7=-1326/579

NOTES
1) Wind: ASCE 7-02; 110mph (3-second gust); h=20ft; TCDL=4.2psf; BCDL=3.0psf; Category II; Exp B; enclosed; MWFRS gable end zone and C-C Exterior(2) zone; Lumber DOL=1.60 plate grip DOL=1.60. This truss is designed for C-C for members and forces, and for MWFRS for reactions specified.
2) Provide adequate drainage to prevent water ponding.
3) Provide mechanical connection (by others) of truss to bearing plate capable of withstanding 388 lb uplift at joint 7 and 450 lb uplift at joint 2.

LOAD CASE(S) Standard

NOVEMBER 03,2005 TRUSS DESIGN ENGINEER:
THOMAS E. MILLER PE 56877, BYRON K. ANDERSON PE 60987
STRUCTURAL ENGINEERING AND INSPECTIONS, INC. EB 9196
16105 N. FLORIDA AVE. STE B, LUTZ, FL 33549

Job	Truss	Truss Type	Qty	Ply	BRYAN ZECHER- LOT 94 EMERALD COVE	
L138287	T05	HIP	1	1	Dwg.#1103051149 Job Reference (optional)	J1481240

Builders FirstSource, Lake City, Fl 32055 — 6.200 s Jul 13 2005 MiTek Industries, Inc. Wed Nov 02 09:02:30 2005 Page 1

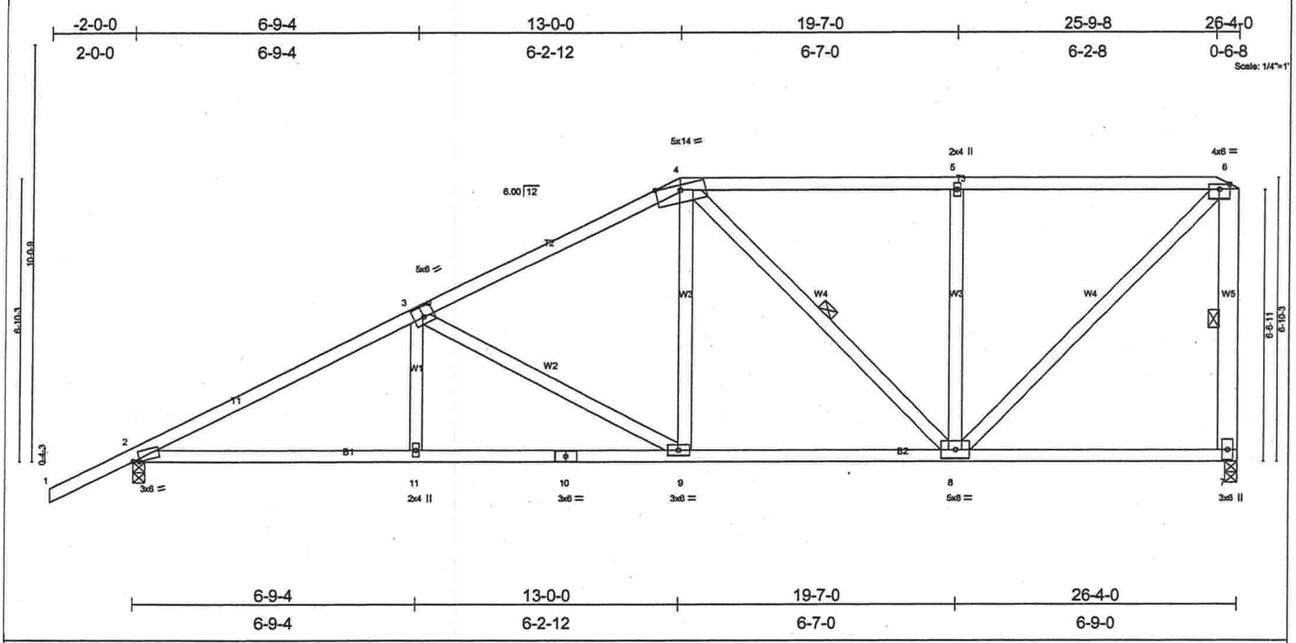

Plate Offsets (X,Y): [2:0-1-13,0-0-7], [3:0-3-0,0-3-0]

LOADING (psf)		SPACING 2-0-0		CSI		DEFL	in	(loc)	l/defl	L/d	PLATES	GRIP
TCLL	20.0	Plates Increase	1.25	TC	0.30	Vert(LL)	-0.10	2-11	>999	240	MT20	244/190
TCDL	7.0	Lumber Increase	1.25	BC	0.43	Vert(TL)	-0.16	2-11	>999	180		
BCLL	10.0	Rep Stress Incr	YES	WB	0.75	Horz(TL)	0.05	7	n/a	n/a		
BCDL	5.0	Code FBC2004/TPI2002		(Matrix)							Weight: 158 lb	

LUMBER
TOP CHORD 2 X 4 SYP No.2
BOT CHORD 2 X 4 SYP No.2
WEBS 2 X 4 SYP No.3 *Except*
W5 2 X 6 SYP No.1D

BRACING
TOP CHORD Structural wood sheathing directly applied or 4-2-15 oc purlins, except end verticals.
BOT CHORD Rigid ceiling directly applied or 6-11-9 oc bracing.
WEBS 1 Row at midpt 4-8, 6-7

REACTIONS (lb/size) 2=1211/0-3-8, 7=1085/0-3-8
Max Horz 2=364(load case 5)
Max Uplift2=-454(load case 5), 7=-377(load case 4)

FORCES (lb) - Maximum Compression/Maximum Tension
TOP CHORD 1-2=0/47, 2-3=-1914/665, 3-4=-1312/520, 4-5=-852/379, 5-6=-852/379, 6-7=-985/487
BOT CHORD 2-11=-824/1632, 10-11=-824/1632, 9-10=-824/1632, 8-9=-535/1115, 7-8=-18/44
WEBS 3-11=0/213, 3-9=-599/331, 4-9=-123/472, 4-8=-371/220, 5-8=-359/265, 6-8=-512/1146

NOTES
1) Wind: ASCE 7-02; 110mph (3-second gust); h=20ft; TCDL=4.2psf; BCDL=3.0psf; Category II; Exp B; enclosed; MWFRS gable end zone and C-C Exterior(2) zone; Lumber DOL=1.60 plate grip DOL=1.60. This truss is designed for C-C for members and forces, and for MWFRS for reactions specified.
2) Provide adequate drainage to prevent water ponding.
3) Provide mechanical connection (by others) of truss to bearing plate capable of withstanding 454 lb uplift at joint 2 and 377 lb uplift at joint 7.

LOAD CASE(S) Standard

NOVEMBER 03,2005 TRUSS DESIGN ENGINEER:
THOMAS E. MILLER PE 56877, BYRON K. ANDERSON PE 60987
STRUCTURAL ENGINEERING AND INSPECTIONS, INC. EB 9196
16105 N. FLORIDA AVE. STE B, LUTZ, FL 33549

Job	Truss	Truss Type	Qty	Ply	BRYAN ZECHER- LOT 94 EMERALD COVE
L138287	T06	HIP	1	1	Dwg.#1103051150
					Job Reference (optional)

Builders FirstSource, Lake City, Fl 32055 — 6.200 s Jul 13 2005 MiTek Industries, Inc. Wed Nov 02 09:02:30 2005 Page 1

-2-0-0	7-9-4	15-0-0	19-4-12	23-9-8	26-4-0
2-0-0	7-9-4	7-2-12	4-4-12	4-4-12	2-6-8

Scale: 1/4"=1'

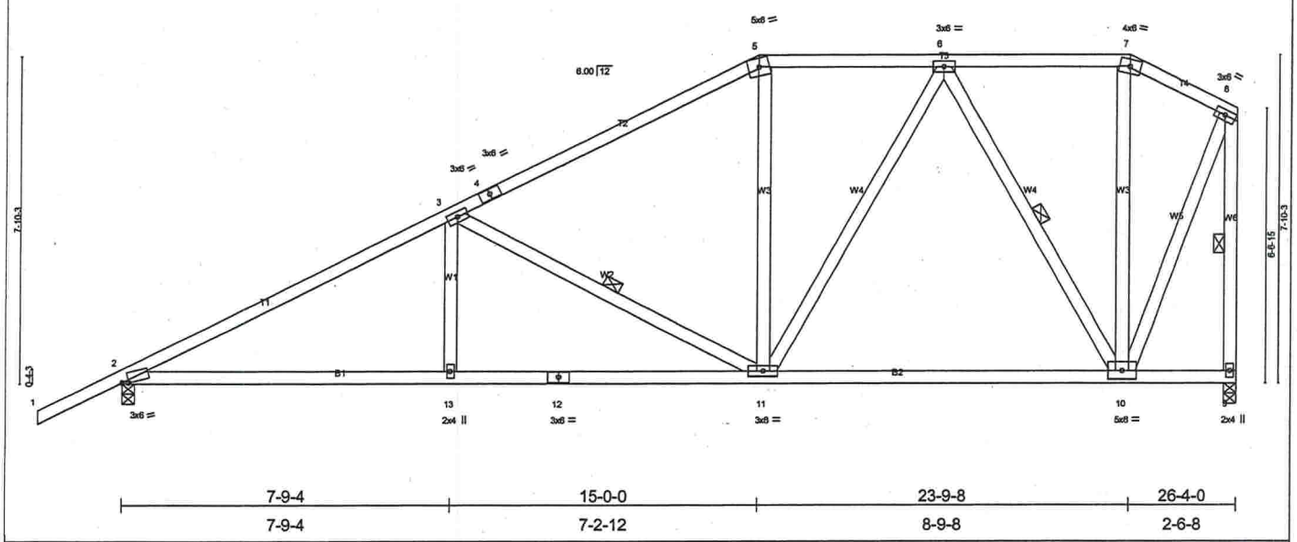

7-9-4	15-0-0	23-9-8	26-4-0
7-9-4	7-2-12	8-9-8	2-6-8

Plate Offsets (X,Y): [2:0-1-13,0-0-7]

LOADING (psf)		SPACING	2-0-0	CSI		DEFL	in	(loc)	l/defl	L/d	PLATES	GRIP
TCLL	20.0	Plates Increase	1.25	TC	0.39	Vert(LL)	-0.15	2-13	>999	240	MT20	244/190
TCDL	7.0	Lumber Increase	1.25	BC	0.49	Vert(TL)	-0.24	2-13	>999	180		
BCLL	10.0	Rep Stress Incr	YES	WB	0.31	Horz(TL)	0.05	9	n/a	n/a		
BCDL	5.0	Code FBC2004/TPI2002		(Matrix)							Weight: 168 lb	

LUMBER
TOP CHORD 2 X 4 SYP No.2
BOT CHORD 2 X 4 SYP No.2
WEBS 2 X 4 SYP No.3

BRACING
TOP CHORD Structural wood sheathing directly applied or 4-1-5 oc purlins, except end verticals.
BOT CHORD Rigid ceiling directly applied or 7-0-0 oc bracing.
WEBS 1 Row at midpt 3-11, 6-10, 8-9

REACTIONS (lb/size) 2=1214/0-3-8, 9=1089/0-3-8
Max Horz 2=371(load case 5)
Max Uplift2=-466(load case 5), 9=-324(load case 5)

FORCES (lb) - Maximum Compression/Maximum Tension
TOP CHORD 1-2=0/47, 2-3=-1875/672, 3-4=-1161/455, 4-5=-1066/480, 5-6=-956/503, 6-7=-357/205, 7-8=-418/192, 8-9=-1104/472
BOT CHORD 2-13=-808/1593, 12-13=-808/1593, 11-12=-808/1593, 10-11=-330/716, 9-10=-4/2
WEBS 3-13=0/243, 3-11=-725/414, 5-11=0/188, 6-11=-227/494, 6-10=-740/380, 7-10=-46/74, 8-10=-379/953

NOTES
1) Unbalanced roof live loads have been considered for this design.
2) Wind: ASCE 7-02; 110mph (3-second gust); h=20ft; TCDL=4.2psf; BCDL=3.0psf; Category II; Exp B; enclosed; MWFRS gable end zone and C-C Exterior(2) zone; Lumber DOL=1.60 plate grip DOL=1.60. This truss is designed for C-C for members and forces, and for MWFRS for reactions specified.
3) Provide adequate drainage to prevent water ponding.
4) Provide mechanical connection (by others) of truss to bearing plate capable of withstanding 466 lb uplift at joint 2 and 324 lb uplift at joint 9.

LOAD CASE(S) Standard

NOVEMBER 03,2005 TRUSS DESIGN ENGINEER:
THOMAS E. MILLER PE 56877, BYRON K. ANDERSON PE 60987
STRUCTURAL ENGINEERING AND INSPECTIONS, INC. EB 9196
16105 N. FLORIDA AVE. STE B, LUTZ, FL 33549

Job	Truss	Truss Type	Qty	Ply	BRYAN ZECHER- LOT 94 EMERALD COVE	
L138287	T07	HIP	1	1	Dwg.#1103051151 Job Reference (optional)	J1481242

Builders FirstSource, Lake City, Fl 32055 — 6.200 s Jul 13 2005 MiTek Industries, Inc. Wed Nov 02 09:02:31 2005 Page 1

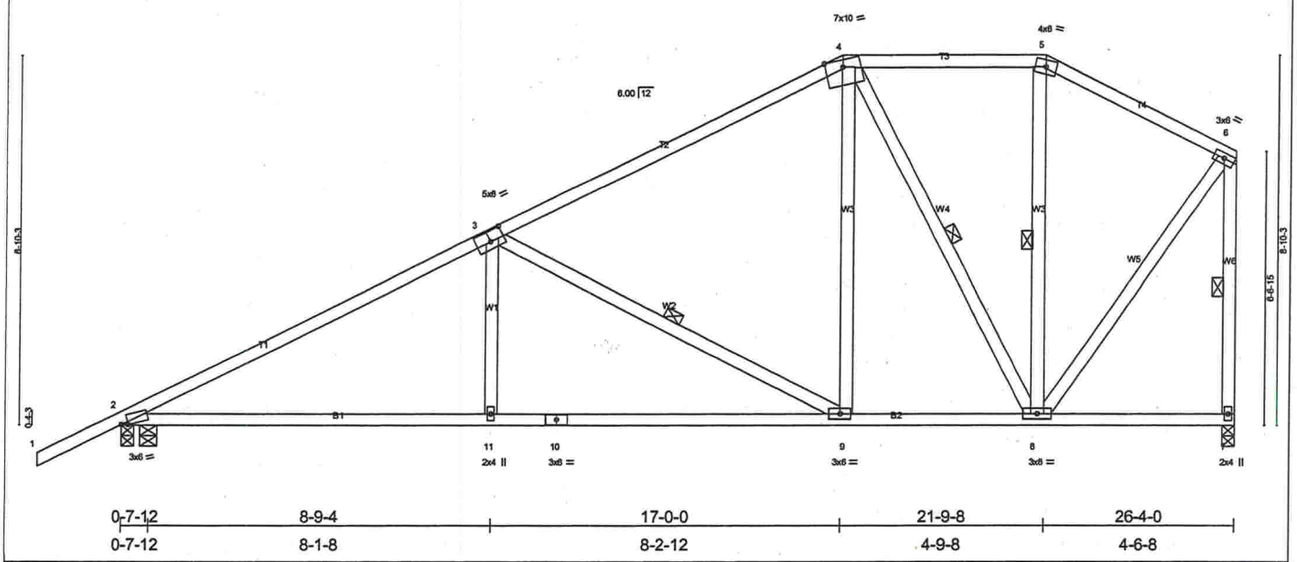

Plate Offsets (X,Y): [2:0-1-13,0-0-7], [3:0-4-0,0-3-0]

LOADING (psf)		SPACING	2-0-0	CSI		DEFL	in	(loc)	l/defl	L/d	PLATES	GRIP
TCLL	20.0	Plates Increase	1.25	TC	0.50	Vert(LL)	-0.21	2-11	>999	240	MT20	244/190
TCDL	7.0	Lumber Increase	1.25	BC	0.70	Vert(TL)	-0.34	2-11	>919	180		
BCLL	10.0	Rep Stress Incr	YES	WB	0.37	Horz(TL)	0.05	7	n/a	n/a		
BCDL	5.0	Code FBC2004/TPI2002		(Matrix)							Weight: 164 lb	

LUMBER
TOP CHORD 2 X 4 SYP No.2
BOT CHORD 2 X 4 SYP No.2
WEBS 2 X 4 SYP No.3

BRACING
TOP CHORD Structural wood sheathing directly applied or 3-10-11 oc purlins, except end verticals.
BOT CHORD Rigid ceiling directly applied or 6-11-8 oc bracing.
WEBS 1 Row at midpt 3-9, 4-8, 5-8, 6-7

REACTIONS (lb/size) 2=1214/0-3-8, 2=1214/0-3-8, 7=1089/0-3-8
Max Horz 2=385(load case 5)
Max Uplift2=-472(load case 5), 7=-345(load case 5)

FORCES (lb) - Maximum Compression/Maximum Tension
TOP CHORD 1-2=0/47, 2-3=-1835/666, 3-4=-988/433, 4-5=-489/320, 5-6=-597/303, 6-7=-1019/501
BOT CHORD 2-11=-793/1550, 10-11=-791/1557, 9-10=-791/1557, 8-9=-364/796, 7-8=-10/16
WEBS 3-11=0/299, 3-9=-867/485, 4-9=-181/593, 4-8=-672/327, 5-8=-79/102, 6-8=-340/811

NOTES
1) Unbalanced roof live loads have been considered for this design.
2) Wind: ASCE 7-02; 110mph (3-second gust); h=20ft; TCDL=4.2psf; BCDL=3.0psf; Category II; Exp B; enclosed; MWFRS gable end zone and C-C Exterior(2) zone; porch left exposed; Lumber DOL=1.60 plate grip DOL=1.60. This truss is designed for C-C for members and forces, and for MWFRS for reactions specified.
3) Provide adequate drainage to prevent water ponding.
4) Provide mechanical connection (by others) of truss to bearing plate capable of withstanding 472 lb uplift at joint 2 and 345 lb uplift at joint 7.

LOAD CASE(S) Standard

NOVEMBER 03,2005 TRUSS DESIGN ENGINEER:
THOMAS E. MILLER PE 56877, BYRON K. ANDERSON PE 60987
STRUCTURAL ENGINEERING AND INSPECTIONS, INC. EB 9196
16105 N. FLORIDA AVE. STE B, LUTZ, FL 33549

Job	Truss	Truss Type	Qty	Ply	BRYAN ZECHER- LOT 94 EMERALD COVE
L138287	T08	HIP	1	1	Dwg.#1103051152 Job Reference (optional)

Builders FirstSource, Lake City, Fl 32055 — 6.200 s Jul 13 2005 MiTek Industries, Inc. Wed Nov 02 09:02:32 2005 Page 1

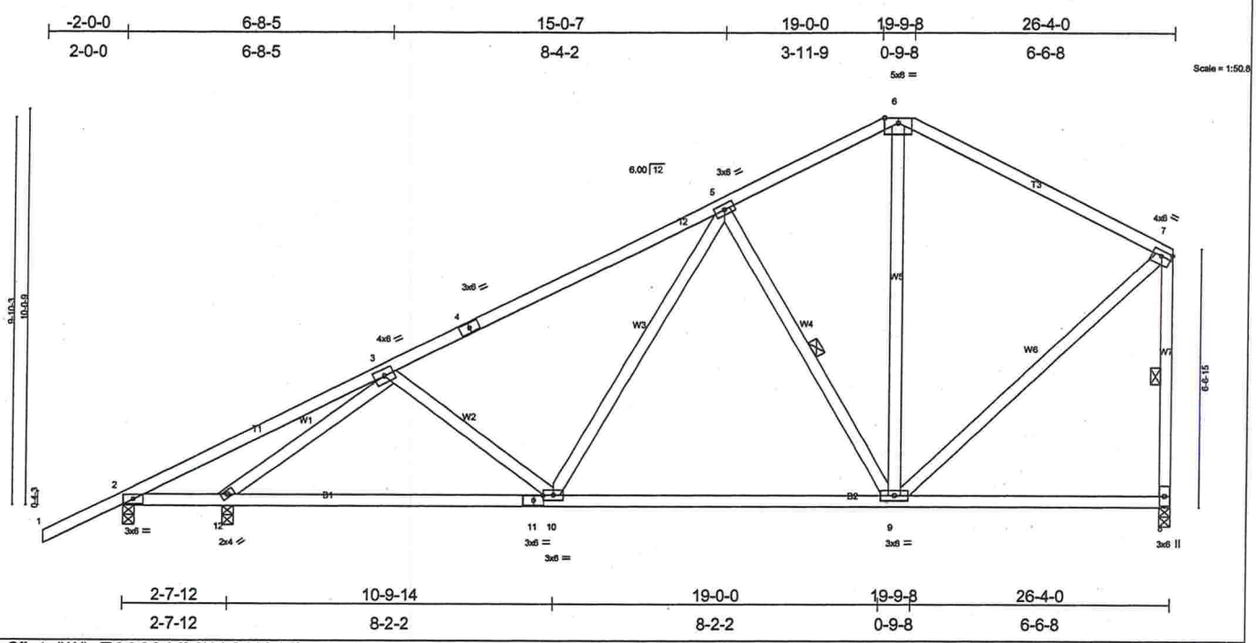

Plate Offsets (X,Y): [7:0-3-0,0-1-8], [11:0-2-14,0-1-8]

LOADING (psf)		SPACING 2-0-0		CSI		DEFL	in	(loc)	l/defl	L/d	PLATES	GRIP
TCLL	20.0	Plates Increase	1.25	TC	0.55	Vert(LL)	-0.11	9-10	>999	240	MT20	244/190
TCDL	7.0	Lumber Increase	1.25	BC	0.43	Vert(TL)	-0.19	9-10	>999	180		
BCLL	10.0	Rep Stress Incr	YES	WB	0.66	Horz(TL)	0.03	8	n/a	n/a		
BCDL	5.0	Code FBC2004/TPI2002		(Matrix)							Weight: 163 lb	

LUMBER
TOP CHORD 2 X 4 SYP No.2
BOT CHORD 2 X 4 SYP No.2
WEBS 2 X 4 SYP No.3

BRACING
TOP CHORD Structural wood sheathing directly applied or 5-3-12 oc purlins, except end verticals.
BOT CHORD Rigid ceiling directly applied or 7-6-3 oc bracing.
WEBS 1 Row at midpt 5-9, 7-8

REACTIONS (lb/size) 2=241/0-3-8, 8=995/0-3-8, 12=1068/0-3-8
Max Horz 2=402(load case 5)
Max Uplift2=-221(load case 5), 8=-347(load case 5), 12=-342(load case 5)

FORCES (lb) - Maximum Compression/Maximum Tension
TOP CHORD 1-2=0/47, 2-3=-113/49, 3-4=-1199/489, 4-5=-1094/518, 5-6=-650/400, 6-7=-670/360, 7-8=-903/484
BOT CHORD 2-12=-182/36, 11-12=-709/1066, 10-11=-709/1066, 9-10=-427/795, 8-9=-25/36
WEBS 3-12=-1323/695, 3-10=-122/276, 5-10=-132/383, 5-9=-571/403, 7-9=-275/671, 6-9=-108/335

NOTES
1) Unbalanced roof live loads have been considered for this design.
2) Wind: ASCE 7-02; 110mph (3-second gust); h=20ft; TCDL=4.2psf; BCDL=3.0psf; Category II; Exp B; enclosed; MWFRS gable end zone and C-C Exterior(2) zone; porch left exposed; Lumber DOL=1.60 plate grip DOL=1.60. This truss is designed for C-C for members and forces, and for MWFRS for reactions specified.
3) Provide mechanical connection (by others) of truss to bearing plate capable of withstanding 221 lb uplift at joint 2, 347 lb uplift at joint 8 and 342 lb uplift at joint 12.

LOAD CASE(S) Standard

NOVEMBER 03,2005 TRUSS DESIGN ENGINEER:
THOMAS E. MILLER PE 56877, BYRON K. ANDERSON PE 60987
STRUCTURAL ENGINEERING AND INSPECTIONS, INC. EB 9196
16105 N. FLORIDA AVE. STE B, LUTZ, FL 33549

Job	Truss	Truss Type	Qty	Ply	BRYAN ZECHER- LOT 94 EMERALD COVE	J1481244
L138287	T09	SPECIAL	1	2	Dwg.#1103051153 Job Reference (optional)	

Builders FirstSource, Lake City, Fl 32055 — 6.200 s Jul 13 2005 MiTek Industries, Inc. Wed Nov 02 09:02:33 2005 Page 1

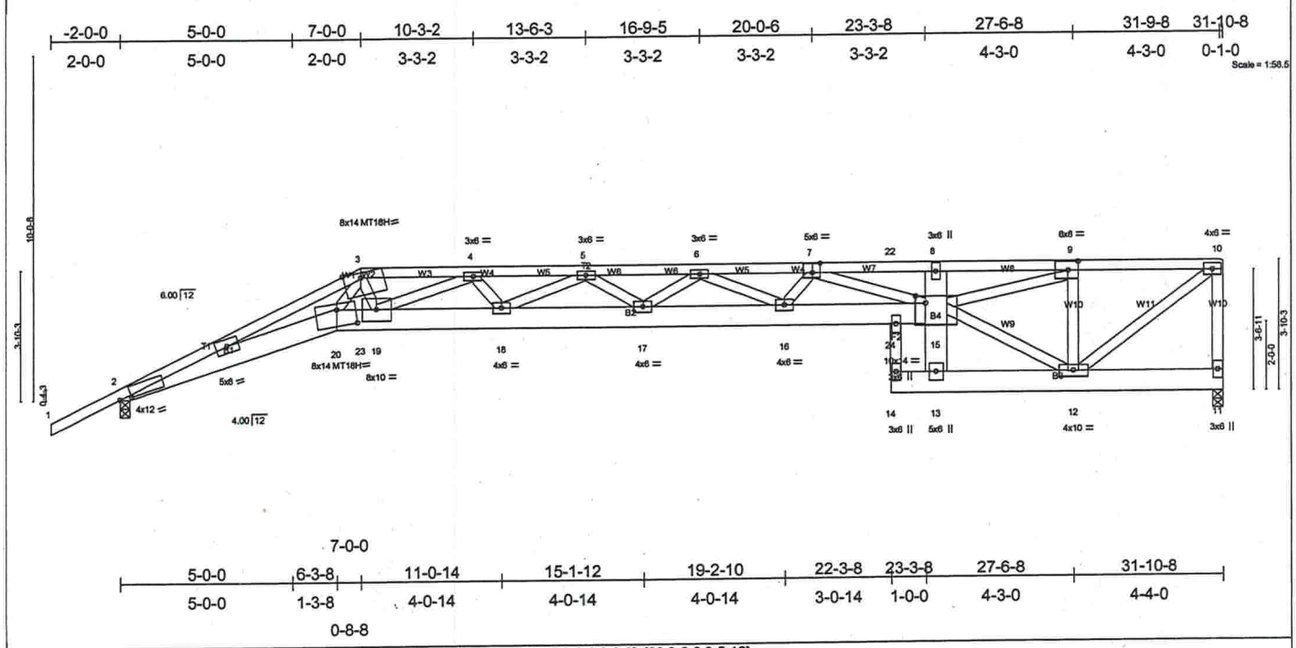

Plate Offsets (X,Y): [2:0-4-1,0-0-5], [3:0-6-3,Edge], [7:0-2-12,0-3-4], [9:0-3-8,0-3-0], [15:0-3-8,0-2-8], [20:0-6-8,0-5-12]

LOADING (psf)		SPACING	2-0-0	CSI		DEFL	in	(loc)	l/defl	L/d	PLATES	GRIP
TCLL	20.0	Plates Increase	1.25	TC	0.68	Vert(LL)	-1.01	17	>376	240	MT20	244/190
TCDL	7.0	Lumber Increase	1.25	BC	0.76	Vert(TL)	-1.61	17	>235	180	MT18H	244/190
BCLL	10.0	Rep Stress Incr	NO	WB	0.75	Horz(TL)	0.78	11	n/a	n/a		
BCDL	5.0	Code FBC2004/TPI2002		(Matrix)							Weight: 447 lb	

LUMBER
TOP CHORD 2 X 4 SYP No.1D *Except*
T3 2 X 4 SYP No.2
BOT CHORD 2 X 8 SYP 2400F 2.0E *Except*
B3 2 X 8 SYP No.1D
WEBS 2 X 4 SYP No.3 *Except*
W8 2 X 4 SYP No.1D, W11 2 X 4 SYP No.2

BRACING
TOP CHORD Structural wood sheathing directly applied or 3-0-8 oc purlins, except end verticals.
BOT CHORD Rigid ceiling directly applied or 10-0-0 oc bracing.

REACTIONS (lb/size) 2=2863/0-3-8, 11=3063/0-3-8
Max Horz 2=228(load case 4)
Max Uplift2=-1023(load case 4), 11=-1222(load case 3)

FORCES (lb) - Maximum Compression/Maximum Tension
TOP CHORD 1-2=0/52, 2-3=-12552/4510, 3-4=-12183/4495, 4-5=-15102/5614, 5-6=-16741/6264, 6-7=-16132/6078, 7-22=-12452/4729, 8-22=-12452/4729, 8-9=-10131/3872, 9-10=-3283/1285, 10-11=-2823/1187
BOT CHORD 2-20=-4227/11590, 20-23=-3949/10706, 19-23=-3948/10703, 18-19=-5417/14528, 17-18=-6104/16242, 16-17=-6289/16660, 16-24=-5891/15536, 15-24=-5891/15536, 13-15=-85/514, 8-15=-349/300, 13-14=0/0, 12-13=-1043/2690, 11-12=-48/83
WEBS 4-19=-2623/1097, 4-18=-399/1141, 5-18=-1315/586, 5-17=-237/657, 6-17=-23/106, 6-16=-609/243, 7-16=-372/1185, 7-15=-3315/1248, 12-15=-271/664, 9-15=-2745/7267, 9-12=-3036/1370, 10-12=-1593/4122, 3-19=-1726/4669, 3-20=-253/926

NOTES
1) 2-ply truss to be connected together with 0.131"x3" Nails as follows:
Top chords connected as follows: 2 X 4 - 1 row at 0-9-0 oc.
Bottom chords connected as follows: 2 X 8 - 2 rows at 0-9-0 oc.
Webs connected as follows: 2 X 4 - 1 row at 0-9-0 oc.
2) All loads are considered equally applied to all plies, except if noted as front (F) or back (B) face in the LOAD CASE(S) section. Ply to ply connections have been provided to distribute only loads noted as (F) or (B), unless otherwise indicated.
3) Wind: ASCE 7-02; 110mph (3-second gust); h=20ft; TCDL=4.2psf; BCDL=3.0psf; Category II; Exp B; enclosed; MWFRS gable end zone; Lumber DOL=1.60 plate grip DOL=1.60.
4) Provide adequate drainage to prevent water ponding.
5) All plates are MT20 plates unless otherwise indicated.
6) Bearing at joint(s) 2 considers parallel to grain value using ANSI/TPI 1 angle to grain formula. Building designer should verify capacity of bearing surface.
7) Provide mechanical connection (by others) of truss to bearing plate capable of withstanding 1023 lb uplift at joint 2 and 1222 lb uplift at joint 11.
8) Girder carries tie-in span(s): 3-0-0 from 7-0-0 to 22-3-8; 7-0-0 from 7-0-0 to 22-3-8
9) Girder carries hip end with 0-0-0 right side setback, 22-3-8 left side setback, and 7-0-0 end setback.
10) Hanger(s) or other connection device(s) shall be provided sufficient to support concentrated load(s) 400 lb down and 151 lb up at 7-0-0 on bottom chord. The design/selection of such connection device(s) is the responsibility of others.

LOAD CASE(S) Standard
1) Regular: Lumber Increase=1.25, Plate Increase=1.25
Uniform Loads (plf)
Vert: 1-3=-54, 3-22=-69(F=-15), 10-22=-118(F=-64), 2-20=-30, 20-23=-30, 23-24=-129(F=-99), 15-24=-65(F=-35), 13-14=-65(F=-35), 11-13=-65(F=-35)
Concentrated Loads (lb)
Vert: 23=-400(F)

NOVEMBER 03,2005 TRUSS DESIGN ENGINEER:
THOMAS E. MILLER PE 56877, BYRON K. ANDERSON PE 60987
STRUCTURAL ENGINEERING AND INSPECTIONS, INC. EB 9196
16105 N. FLORIDA AVE. STE B, LUTZ, FL 33549

Job	Truss	Truss Type	Qty	Ply	BRYAN ZECHER- LOT 94 EMERALD COVE	J1481245
L138287	T10	SPECIAL	1	1	Dwg.#1103051154 Job Reference (optional)	

Builders FirstSource, Lake City, Fl 32055 — 6.200 s Jul 13 2005 MiTek Industries, Inc. Wed Nov 02 09:02:34 2005 Page 1

-2-0-0	3-8-9	6-3-8	9-0-0	15-11-12	22-9-12	29-9-8	31-10-8
2-0-0	3-8-9	2-6-15	2-8-8	6-11-12	6-10-0	6-11-12	2-1-0

Scale = 1:57.6

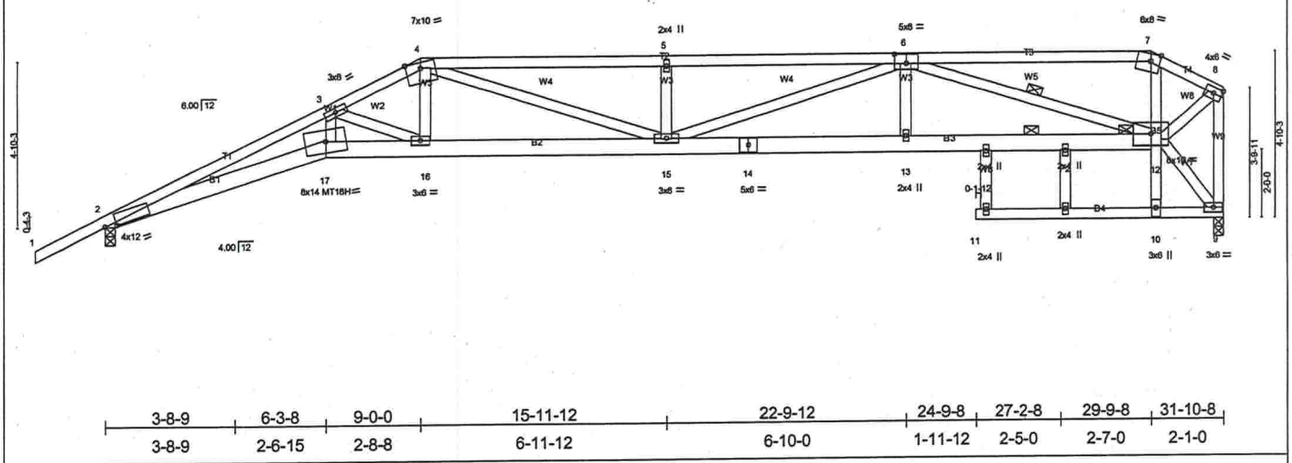

3-8-9	6-3-8	9-0-0	15-11-12	22-9-12	24-9-8	27-2-8	29-9-8	31-10-8
3-8-9	2-6-15	2-8-8	6-11-12	6-10-0	1-11-12	2-5-0	2-7-0	2-1-0

Plate Offsets (X,Y): [2:0-4-1,0-0-11], [6:0-4-0,0-3-0], [7:0-3-3,Edge]

LOADING (psf)		SPACING	2-0-0	CSI		DEFL	in	(loc)	l/defl	L/d	PLATES	GRIP
TCLL	20.0	Plates Increase	1.25	TC	0.90	Vert(LL)	-0.77	11	>494	240	MT20	244/190
TCDL	7.0	Lumber Increase	1.25	BC	0.98	Vert(TL)	-1.30	11	>292	180	MT18H	244/190
BCLL	10.0	Rep Stress Incr	YES	WB	0.73	Horz(TL)	0.57	9	n/a	n/a		
BCDL	5.0	Code FBC2004/TPI2002		(Matrix)							Weight: 203 lb	

LUMBER
TOP CHORD 2 X 4 SYP No.2
BOT CHORD 2 X 6 SYP No.1D *Except*
B5 2 X 4 SYP No.3, B4 2 X 4 SYP No.2
WEBS 2 X 4 SYP No.3

BRACING
TOP CHORD Structural wood sheathing directly applied or 1-7-12 oc purlins, except end verticals.
BOT CHORD Rigid ceiling directly applied or 2-2-0 oc bracing. Except:
1 Row at midpt 12-13
WEBS 1 Row at midpt 6-12
JOINTS 1 Brace at Jt(s): 12

REACTIONS (lb/size) 2=1468/0-3-8, 9=1456/0-3-8
Max Horz 2=241(load case 5)
Max Uplift2=-497(load case 5), 9=-399(load case 3)

FORCES (lb) - Maximum Compression/Maximum Tension
TOP CHORD 1-2=0/49, 2-3=-6098/2395, 3-4=-3985/1610, 4-5=-4389/1736, 5-6=-4389/1736, 6-7=-1336/427, 7-8=-1410/381, 8-9=-1685/449
BOT CHORD 2-17=-2317/5634, 16-17=-2144/5162, 15-16=-1452/3636, 14-15=-1357/3705, 13-14=-1357/3705, 12-13=-1357/3703, 10-12=0/319, 7-12=0/347, 10-11=0/0, 9-10=-118/0
WEBS 3-17=-530/1518, 3-16=-1739/782, 4-16=-431/1182, 4-15=-395/948, 5-15=-367/271, 6-15=-350/734, 6-13=0/208, 6-12=-2514/1038, 8-12=-428/1661, 9-12=0/158

NOTES
1) Unbalanced roof live loads have been considered for this design.
2) Wind: ASCE 7-02; 110mph (3-second gust); h=20ft; TCDL=4.2psf; BCDL=3.0psf; Category II; Exp B; enclosed; MWFRS gable end zone and C-C Exterior(2) zone; Lumber DOL=1.60 plate grip DOL=1.60. This truss is designed for C-C for members and forces, and for MWFRS for reactions specified.
3) Provide adequate drainage to prevent water ponding.
4) All plates are MT20 plates unless otherwise indicated.
5) Bearing at joint(s) 2 considers parallel to grain value using ANSI/TPI 1 angle to grain formula. Building designer should verify capacity of bearing surface.
6) Provide mechanical connection (by others) of truss to bearing plate capable of withstanding 497 lb uplift at joint 2 and 399 lb uplift at joint 9.

LOAD CASE(S) Standard

NOVEMBER 03,2005 TRUSS DESIGN ENGINEER:
THOMAS E. MILLER PE 56877, BYRON K. ANDERSON PE 60987
STRUCTURAL ENGINEERING AND INSPECTIONS, INC. EB 9196
16105 N. FLORIDA AVE. STE B, LUTZ, FL 33549

Job	Truss	Truss Type	Qty	Ply	BRYAN ZECHER- LOT 94 EMERALD COVE
L138287	T11	SPECIAL	1	1	Dwg.#1103051155 Job Reference (optional)

Builders FirstSource, Lake City, Fl 32055 — 6.200 s Jul 13 2005 MiTek Industries, Inc. Wed Nov 02 09:02:34 2005 Page 1

-2-0-0	3-8-9	6-3-8	11-0-0	16-7-12	22-1-12	27-9-8	31-10-8
2-0-0	3-8-9	2-6-15	4-8-8	5-7-12	5-6-0	5-7-12	4-1-0

Scale = 1:57.6

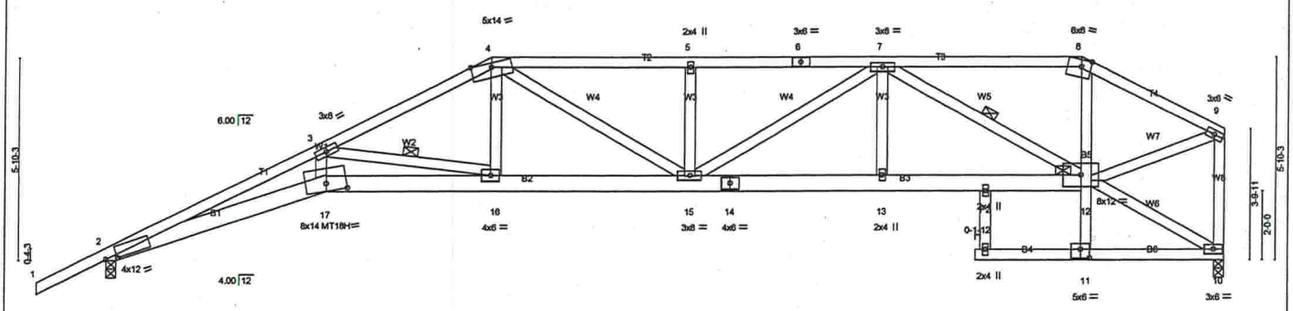

3-8-9	6-3-8	11-0-0	16-7-12	22-1-12	24-9-8	27-2-8	27-9-8	31-10-8
3-8-9	2-6-15	4-8-8	5-7-12	5-6-0	2-7-12	2-5-0	0-7-0	4-1-0

Plate Offsets (X,Y): [2:0-4-1,0-0-11], [8:0-3-3,Edge], [11:0-3-0,0-3-0], [17:0-7-0,0-2-11]

LOADING (psf)		SPACING 2-0-0		CSI		DEFL	in	(loc)	l/defl	L/d	PLATES	GRIP
TCLL	20.0	Plates Increase	1.25	TC	0.79	Vert(LL)	-0.55	16-17	>694	240	MT20	244/190
TCDL	7.0	Lumber Increase	1.25	BC	0.98	Vert(TL)	-0.88	16-17	>433	180	MT18H	244/190
BCLL	10.0	Rep Stress Incr	YES	WB	0.53	Horz(TL)	0.50	10	n/a	n/a		
BCDL	5.0	Code FBC2004/TPI2002		(Matrix)							Weight: 207 lb	

LUMBER
TOP CHORD 2 X 4 SYP No.2
BOT CHORD 2 X 6 SYP No.1D *Except*
B5 2 X 4 SYP No.3, B6 2 X 4 SYP No.2, B4 2 X 4 SYP No.2
WEBS 2 X 4 SYP No.3

BRACING
TOP CHORD Structural wood sheathing directly applied or 1-10-15 oc purlins, except end verticals.
BOT CHORD Rigid ceiling directly applied or 2-2-0 oc bracing.
WEBS 1 Row at midpt 3-16, 7-12
JOINTS 1 Brace at Jt(s): 12

REACTIONS (lb/size) 2=1446/0-3-8, 10=1323/0-3-8
Max Horz 2=255(load case 5)
Max Uplift2=-518(load case 5), 10=-371(load case 3)

FORCES (lb) - Maximum Compression/Maximum Tension
TOP CHORD 1-2=0/49, 2-3=-5980/2466, 3-4=-3153/1329, 4-5=-3010/1301, 5-6=-3010/1301, 6-7=-3010/1301, 7-8=-1332/622, 8-9=-1517/638, 9-10=-1264/554
BOT CHORD 2-17=-2387/5525, 16-17=-2360/5478, 15-16=-1160/2833, 14-15=-1022/2595, 13-14=-1022/2595, 12-13=-1022/2595, 11-12=0/57, 8-12=-81/426, 10-11=-6/21
WEBS 3-17=-574/1622, 3-16=-2742/1240, 4-16=-338/956, 4-15=-223/386, 5-15=-297/214, 7-15=-210/509, 7-13=0/194, 7-12=-1495/584, 9-12=-545/1393, 10-12=-13/9

NOTES
1) Unbalanced roof live loads have been considered for this design.
2) Wind: ASCE 7-02; 110mph (3-second gust); h=20ft; TCDL=4.2psf; BCDL=3.0psf; Category II; Exp B; enclosed; MWFRS gable end zone and C-C Exterior(2) zone; Lumber DOL=1.60 plate grip DOL=1.60. This truss is designed for C-C for members and forces, and for MWFRS for reactions specified.
3) Provide adequate drainage to prevent water ponding.
4) All plates are MT20 plates unless otherwise indicated.
5) Bearing at joint(s) 2 considers parallel to grain value using ANSI/TPI 1 angle to grain formula. Building designer should verify capacity of bearing surface.
6) Provide mechanical connection (by others) of truss to bearing plate capable of withstanding 518 lb uplift at joint 2 and 371 lb uplift at joint 10.

LOAD CASE(S) Standard

NOVEMBER 03,2005 TRUSS DESIGN ENGINEER:
THOMAS E. MILLER PE 56877, BYRON K. ANDERSON PE 60987
STRUCTURAL ENGINEERING AND INSPECTIONS, INC. EB 9196
16105 N. FLORIDA AVE. STE B, LUTZ, FL 33549

Job	Truss	Truss Type	Qty	Ply	BRYAN ZECHER- LOT 94 EMERALD COVE
L138287	T12	SPECIAL	1	1	Dwg.#1103051156 Job Reference (optional)

Builders FirstSource, Lake City, Fl 32055 — 6.200 s Jul 13 2005 MiTek Industries, Inc. Wed Nov 02 09:02:35 2005 Page 1

-2-0-0	4-8-7	6-3-8	13-0-0	19-4-12	25-9-8	28-2-8	33-2-12	38-9-8	40-9-8
2-0-0	4-8-7	1-7-1	6-8-8	6-4-12	6-4-12	2-5-0	5-0-4	5-6-12	2-0-0

Scale = 1:71.7

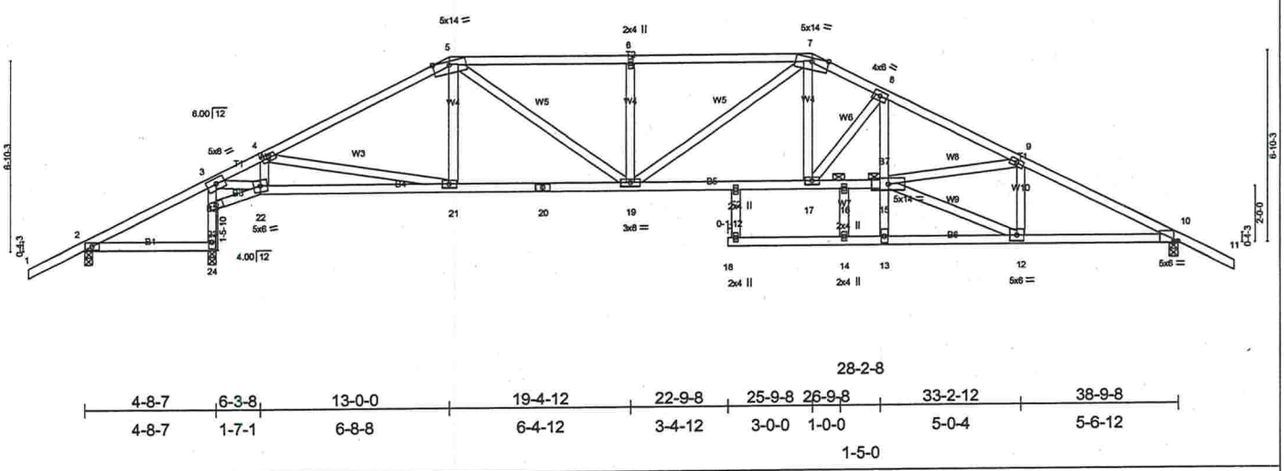

28-2-8

4-8-7	6-3-8	13-0-0	19-4-12	22-9-8	25-9-8	26-9-8	33-2-12	38-9-8
4-8-7	1-7-1	6-8-8	6-4-12	3-4-12	3-0-0	1-0-0	5-0-4	5-6-12

1-5-0

Plate Offsets (X,Y): [10:0-1-11,Edge]

LOADING (psf)		SPACING	2-0-0	CSI		DEFL	in	(loc)	l/defl	L/d	PLATES	GRIP
TCLL	20.0	Plates Increase	1.25	TC	0.45	Vert(LL)	-0.51	18	>803	240	MT20	244/190
TCDL	7.0	Lumber Increase	1.25	BC	0.85	Vert(TL)	-0.86	18	>478	180		
BCLL	10.0	Rep Stress Incr	YES	WB	0.79	Horz(TL)	0.19	10	n/a	n/a		
BCDL	5.0	Code FBC2004/TPI2002		(Matrix)							Weight: 229 lb	

LUMBER
TOP CHORD 2 X 4 SYP No.2
BOT CHORD 2 X 4 SYP No.2 *Except*
B7 2 X 4 SYP No.3
WEBS 2 X 4 SYP No.3

BRACING
TOP CHORD Structural wood sheathing directly applied or 3-0-14 oc purlins.
BOT CHORD Rigid ceiling directly applied or 3-1-15 oc bracing.
JOINTS 1 Brace at Jt(s): 15, 16

REACTIONS (lb/size) 2=122/0-3-8, 24=1870/0-3-8, 10=1598/0-3-8
Max Horz 2=-129(load case 6)
Max Uplift2=-213(load case 5), 24=-552(load case 5), 10=-556(load case 6)
Max Grav 2=141(load case 9), 24=1870(load case 1), 10=1598(load case 1)

FORCES (lb) - Maximum Compression/Maximum Tension
TOP CHORD 1-2=0/47, 2-3=-119/455, 3-4=-1632/668, 4-5=-2318/896, 5-6=-2726/1094, 6-7=-2726/1094, 7-8=-3010/1104, 8-9=-3784/1327, 9-10=-2802/1030, 10-11=0/47
BOT CHORD 2-24=-337/121, 23-24=-1842/669, 3-23=-1483/495, 22-23=-884/396, 21-22=-449/1529, 20-21=-463/2010, 19-20=-463/2010, 17-19=-624/2722, 16-17=-871/3325, 15-16=-868/3338, 13-15=-202/13, 8-15=-276/953, 14-18=0/0, 13-14=0/0, 12-13=-53/163, 10-12=-749/2427
WEBS 3-22=-776/2306, 4-22=-628/348, 4-21=-162/601, 5-21=0/141, 5-19=-284/970, 6-19=-359/258, 7-19=-191/174, 7-17=-249/1049, 8-17=-996/399, 12-15=-759/2470, 9-15=-175/907, 9-12=-827/354, 14-16=0/439

NOTES
1) Unbalanced roof live loads have been considered for this design.
2) Wind: ASCE 7-02; 110mph (3-second gust); h=20ft; TCDL=4.2psf; BCDL=3.0psf; Category II; Exp B; enclosed; MWFRS gable end zone and C-C Exterior(2) zone; porch left exposed; Lumber DOL=1.60 plate grip DOL=1.60. This truss is designed for C-C for members and forces, and for MWFRS for reactions specified.
3) Provide adequate drainage to prevent water ponding.
4) All plates are 3x6 MT20 unless otherwise indicated.
5) Provide mechanical connection (by others) of truss to bearing plate capable of withstanding 213 lb uplift at joint 2, 552 lb uplift at joint 24 and 556 lb uplift at joint 10.

LOAD CASE(S) Standard

NOVEMBER 03,2005 TRUSS DESIGN ENGINEER:
THOMAS E. MILLER PE 56877, BYRON K. ANDERSON PE 60987
STRUCTURAL ENGINEERING AND INSPECTIONS, INC. EB 9196
16105 N. FLORIDA AVE. STE B, LUTZ, FL 33549

Job	Truss	Truss Type	Qty	Ply	BRYAN ZECHER- LOT 94 EMERALD COVE
L138287	T13	SPECIAL	1	1	Dwg.#1103051157 Job Reference (optional)

Builders FirstSource, Lake City, Fl 32055 — 6.200 s Jul 13 2005 MiTek Industries, Inc. Wed Nov 02 09:02:36 2005 Page 1

-2-0-0	6-3-8	10-7-12	15-0-0	19-4-12	23-9-8	28-2-8	33-2-12	38-9-8	40-9-8
2-0-0	6-3-8	4-4-4	4-4-4	4-4-12	4-4-12	4-5-0	5-0-4	5-6-12	2-0-0

Scale = 1:71.7

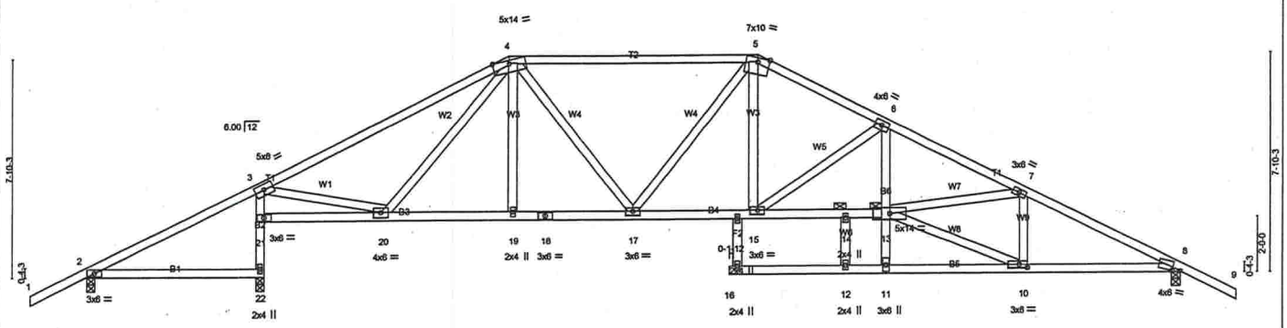

6-1-12	6-3-8	10-7-12	15-0-0	19-4-12	22-9-8	23-9-8	27-2-8	28-2-8	33-2-12	38-9-8
6-1-12	0-1-12	4-4-4	4-4-4	4-4-12	3-4-12	1-0-0	3-5-0	1-0-0	5-0-4	5-6-12

Plate Offsets (X,Y): [8:0-3-5,0-0-11], [10:0-3-8,0-1-8]

LOADING (psf)		SPACING 2-0-0		CSI		DEFL	in	(loc)	l/defl	L/d	PLATES	GRIP
TCLL	20.0	Plates Increase	1.25	TC	0.59	Vert(LL)	-0.52	16	>750	240	MT20	244/190
TCDL	7.0	Lumber Increase	1.25	BC	0.84	Vert(TL)	-0.88	16	>442	180		
BCLL	10.0	Rep Stress Incr	YES	WB	0.78	Horz(TL)	0.14	8	n/a	n/a		
BCDL	5.0	Code FBC2004/TPI2002		(Matrix)							Weight: 231 lb	

LUMBER
TOP CHORD 2 X 4 SYP No.2
BOT CHORD 2 X 4 SYP No.2 *Except*
B2 2 X 4 SYP No.3, B6 2 X 4 SYP No.3
WEBS 2 X 4 SYP No.3

BRACING
TOP CHORD Structural wood sheathing directly applied or 3-1-11 oc purlins.
BOT CHORD Rigid ceiling directly applied or 4-0-13 oc bracing.
JOINTS 1 Brace at Jt(s): 13, 14

REACTIONS (lb/size) 2=323/0-3-8, 22=1723/0-3-8, 8=1544/0-3-8
Max Horz 2=-143(load case 6)
Max Uplift2=-282(load case 5), 22=-557(load case 5), 8=-563(load case 6)
Max Grav 2=332(load case 9), 22=1723(load case 1), 8=1544(load case 1)

FORCES (lb) - Maximum Compression/Maximum Tension
TOP CHORD 1-2=0/47, 2-3=-50/262, 3-4=-1761/734, 4-5=-1974/858, 5-6=-2423/951, 6-7=-3642/1276, 7-8=-2683/1005, 8-9=0/47
BOT CHORD 2-22=-31/0, 21-22=-1633/604, 3-21=-1547/608, 20-21=-148/86, 19-20=-355/1686, 18-19=-354/1690, 17-18=-354/1690, 15-17=-455/2172, 14-15=-835/3215, 13-14=-830/3234, 11-13=-135/28, 6-13=-234/1075, 12-16=0/0, 11-12=0/0, 10-11=-68/99, 8-10=-727/2322
WEBS 3-20=-163/1473, 4-20=-329/102, 4-19=0/148, 4-17=-78/539, 5-17=-401/107, 5-15=-226/926, 6-15=-1297/469, 10-13=-719/2426, 7-13=-122/885, 7-10=-815/337, 12-14=0/377

NOTES
1) Unbalanced roof live loads have been considered for this design.
2) Wind: ASCE 7-02; 110mph (3-second gust); h=20ft; TCDL=4.2psf; BCDL=3.0psf; Category II; Exp B; enclosed; MWFRS gable end zone and C-C Exterior(2) zone; porch left exposed; Lumber DOL=1.60 plate grip DOL=1.60. This truss is designed for C-C for members and forces, and for MWFRS for reactions specified.
3) Provide adequate drainage to prevent water ponding.
4) Provide mechanical connection (by others) of truss to bearing plate capable of withstanding 282 lb uplift at joint 2, 557 lb uplift at joint 22 and 563 lb uplift at joint 8.

LOAD CASE(S) Standard

NOVEMBER 03,2005 TRUSS DESIGN ENGINEER:
THOMAS E. MILLER PE 56877, BYRON K. ANDERSON PE 60987
STRUCTURAL ENGINEERING AND INSPECTIONS, INC. EB 9196
16105 N. FLORIDA AVE. STE B, LUTZ, FL 33549

Job	Truss	Truss Type	Qty	Ply	BRYAN ZECHER- LOT 94 EMERALD COVE	J1481249
L138287	T14	SPECIAL	1	1	Dwg.#1103051158 Job Reference (optional)	

Builders FirstSource, Lake City, Fl 32055 — 6.200 s Jul 13 2005 MiTek Industries, Inc. Wed Nov 02 09:02:37 2005 Page 1

-2-0-0	6-3-8	10-8-6	17-0-0	21-9-8	28-2-8	33-2-12	38-9-8	40-9-8
2-0-0	6-3-8	4-4-13	6-3-10	4-9-8	6-5-0	5-0-4	5-6-12	2-0-0

Scale = 1:71.7

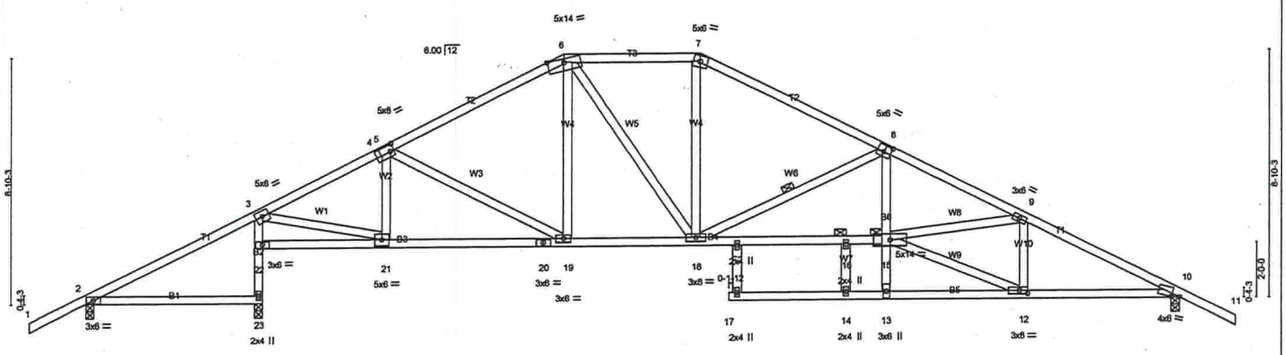

6-1-12	6-3-8	10-8-6	17-0-0	21-9-8	22-9-8	28-1-15	28-2-8	33-2-12	38-9-8
6-1-12	0-1-12	4-4-13	6-3-10	4-9-8	1-0-0	5-4-6	0-0-10	5-0-4	5-6-12

Plate Offsets (X,Y): [4:0-1-12,0-3-0], [8:0-3-0,0-3-0], [10:0-3-5,0-0-11], [12:0-3-8,0-1-8]

LOADING (psf)		SPACING	2-0-0	CSI		DEFL	in	(loc)	l/defl	L/d	PLATES	GRIP
TCLL	20.0	Plates Increase	1.25	TC	0.33	Vert(LL)	-0.57	17	>686	240	MT20	244/190
TCDL	7.0	Lumber Increase	1.25	BC	0.84	Vert(TL)	-0.97	17	>403	180		
BCLL	10.0	Rep Stress Incr	YES	WB	0.78	Horz(TL)	0.15	10	n/a	n/a		
BCDL	5.0	Code FBC2004/TPI2002		(Matrix)							Weight: 233 lb	

LUMBER
TOP CHORD 2 X 4 SYP No.2
BOT CHORD 2 X 4 SYP No.2 *Except*
B2 2 X 4 SYP No.3, B6 2 X 4 SYP No.3
WEBS 2 X 4 SYP No.3

BRACING
TOP CHORD Structural wood sheathing directly applied or 3-2-0 oc purlins.
BOT CHORD Rigid ceiling directly applied or 4-0-9 oc bracing.
WEBS 1 Row at midpt 8-18
JOINTS 1 Brace at Jt(s): 15, 16

REACTIONS (lb/size) 2=329/0-3-8, 23=1715/0-3-8, 10=1545/0-3-8
Max Horz 2=157(load case 5)
Max Uplift2=-279(load case 5), 23=-576(load case 5), 10=-576(load case 6)
Max Grav 2=340(load case 9), 23=1715(load case 1), 10=1545(load case 1)

FORCES (lb) - Maximum Compression/Maximum Tension
TOP CHORD 1-2=0/47, 2-3=-58/277, 3-4=-1855/798, 4-5=-1745/799, 5-6=-1847/800, 6-7=-1815/842, 7-8=-2096/861, 8-9=-3681/1292, 9-10=-2681/1018, 10-11=0/47
BOT CHORD 2-23=-33/0, 22-23=-1623/603, 3-22=-1551/609, 21-22=-126/85, 20-21=-417/1610, 19-20=-417/1610, 18-19=-272/1588, 16-18=-887/3296, 15-16=-883/3317, 13-15=-100/50, 8-15=-211/1137, 14-17=0/0, 13-14=0/0, 12-13=-94/77, 10-12=-737/2319
WEBS 3-21=-517/1787, 5-21=-265/166, 5-19=-99/166, 6-19=-49/203, 6-18=-129/503, 7-18=-154/598, 8-18=-1662/625, 12-15=-701/2446, 9-15=-131/929, 9-12=-826/327, 14-16=-7/345

NOTES
1) Unbalanced roof live loads have been considered for this design.
2) Wind: ASCE 7-02; 110mph (3-second gust); h=20ft; TCDL=4.2psf; BCDL=3.0psf; Category II; Exp B; enclosed; MWFRS gable end zone and C-C Exterior(2) zone; porch left exposed; Lumber DOL=1.60 plate grip DOL=1.60. This truss is designed for C-C for members and forces, and for MWFRS for reactions specified.
3) Provide adequate drainage to prevent water ponding.
4) Provide mechanical connection (by others) of truss to bearing plate capable of withstanding 279 lb uplift at joint 2, 576 lb uplift at joint 23 and 576 lb uplift at joint 10.

LOAD CASE(S) Standard

NOVEMBER 03,2005 TRUSS DESIGN ENGINEER:
THOMAS E. MILLER PE 56877, BYRON K. ANDERSON PE 60987
STRUCTURAL ENGINEERING AND INSPECTIONS, INC. EB 9196
16105 N. FLORIDA AVE. STE B, LUTZ, FL 33549

Job	Truss	Truss Type	Qty	Ply	BRYAN ZECHER- LOT 94 EMERALD COVE
L138287	T15	SPECIAL	1	1	Dwg.#1103051159
					Job Reference (optional)

Builders FirstSource, Lake City, Fl 32055 — 6.200 s Jul 13 2005 MiTek Industries, Inc. Wed Nov 02 09:02:38 2005 Page 1

-2-0-0	6-3-8	14-0-5	19-0-0	19-9-8	24-7-8	28-2-8	33-2-12	38-9-8	40-9-8
2-0-0	6-3-8	7-8-13	4-11-11	0-9-8	4-10-0	3-7-0	5-0-4	5-6-12	2-0-0

Scale = 1:71.7

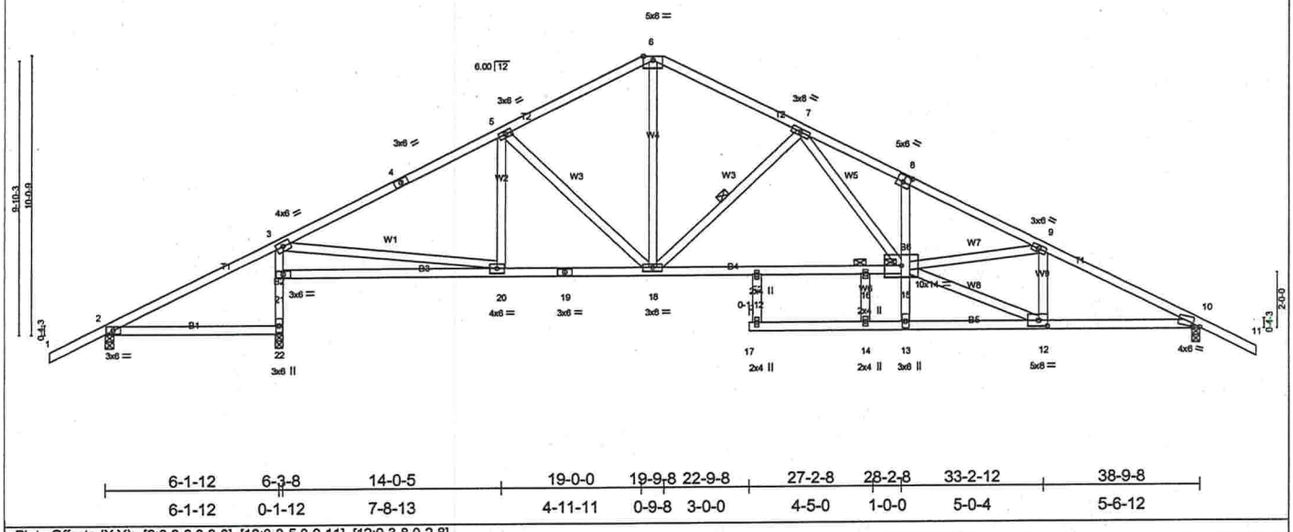

6-1-12	6-3-8	14-0-5	19-0-0	19-9-8	22-9-8	27-2-8	28-2-8	33-2-12	38-9-8
6-1-12	0-1-12	7-8-13	4-11-11	0-9-8	3-0-0	4-5-0	1-0-0	5-0-4	5-6-12

Plate Offsets (X,Y): [8:0-3-0,0-3-0], [10:0-3-5,0-0-11], [12:0-3-8,0-2-8]

LOADING (psf)		SPACING	2-0-0	CSI		DEFL	in	(loc)	l/defl	L/d	PLATES	GRIP
TCLL	20.0	Plates Increase	1.25	TC	0.47	Vert(LL)	-0.76	17	>513	240	MT20	244/190
TCDL	7.0	Lumber Increase	1.25	BC	1.00	Vert(TL)	-1.29	17	>303	180		
BCLL	10.0	Rep Stress Incr	YES	WB	0.84	Horz(TL)	0.15	10	n/a	n/a		
BCDL	5.0	Code FBC2004/TPI2002		(Matrix)							Weight: 231 lb	

LUMBER
TOP CHORD 2 X 4 SYP No.2
BOT CHORD 2 X 4 SYP No.2 *Except*
B2 2 X 4 SYP No.3, B6 2 X 4 SYP No.3
WEBS 2 X 4 SYP No.3

BRACING
TOP CHORD Structural wood sheathing directly applied or 3-1-7 oc purlins.
BOT CHORD Rigid ceiling directly applied or 4-1-15 oc bracing.
WEBS 1 Row at midpt 7-18
JOINTS 1 Brace at Jt(s): 15, 16

REACTIONS (lb/size) 2=332/0-3-8, 22=1712/0-3-8, 10=1546/0-3-8
Max Horz 2=174(load case 5)
Max Uplift2=-280(load case 6), 22=-600(load case 5), 10=-588(load case 6)
Max Grav 2=339(load case 9), 22=1712(load case 1), 10=1546(load case 1)

FORCES (lb) - Maximum Compression/Maximum Tension
TOP CHORD 1-2=0/47, 2-3=-62/306, 3-4=-1991/827, 4-5=-1887/841, 5-6=-1729/805, 6-7=-1719/798, 7-8=-3702/1391, 8-9=-3675/1295, 9-10=-2681/1038, 10-11=0/47
BOT CHORD 2-22=-45/0, 21-22=-1619/612, 3-21=-1481/634, 20-21=-102/216, 19-20=-397/1688, 18-19=-397/1688, 16-18=-551/2257, 15-16=-551/2257, 13-15=0/88, 8-15=-222/209, 14-17=0/0, 13-14=0/0, 12-13=-134/0, 10-12=-756/2321
WEBS 3-20=-298/1500, 5-20=-54/85, 5-18=-350/273, 7-18=-1082/494, 7-15=-509/1734, 12-15=-747/2625, 9-15=-109/918, 9-12=-863/333, 6-18=-495/1203, 14-16=0/178

NOTES
1) Unbalanced roof live loads have been considered for this design.
2) Wind: ASCE 7-02; 110mph (3-second gust); h=20ft; TCDL=4.2psf; BCDL=3.0psf; Category II; Exp B; enclosed; MWFRS gable end zone and C-C Exterior(2) zone; porch left exposed; Lumber DOL=1.60 plate grip DOL=1.60. This truss is designed for C-C for members and forces, and for MWFRS for reactions specified.
3) Provide mechanical connection (by others) of truss to bearing plate capable of withstanding 280 lb uplift at joint 2, 600 lb uplift at joint 22 and 588 lb uplift at joint 10.

LOAD CASE(S) Standard

NOVEMBER 03,2005 TRUSS DESIGN ENGINEER:
THOMAS E. MILLER PE 56877, BYRON K. ANDERSON PE 60987
STRUCTURAL ENGINEERING AND INSPECTIONS, INC. EB 9196
16105 N. FLORIDA AVE. STE B, LUTZ, FL 33549

Job	Truss	Truss Type	Qty	Ply	BRYAN ZECHER- LOT 94 EMERALD COVE
L138287	T16	SPECIAL	1	1	Dwg.#1103051160 Job Reference (optional)

Builders FirstSource, Lake City, Fl 32055 — 6.200 s Jul 13 2005 MiTek Industries, Inc. Wed Nov 02 09:02:39 2005 Page 1

-2-0-0	6-3-8	14-0-3	19-4-12	24-7-7	28-2-8	33-2-12	38-9-8	40-9-8
2-0-0	6-3-8	7-8-11	5-4-9	5-2-12	3-7-1	5-0-4	5-6-12	2-0-0

Scale = 1:71.0

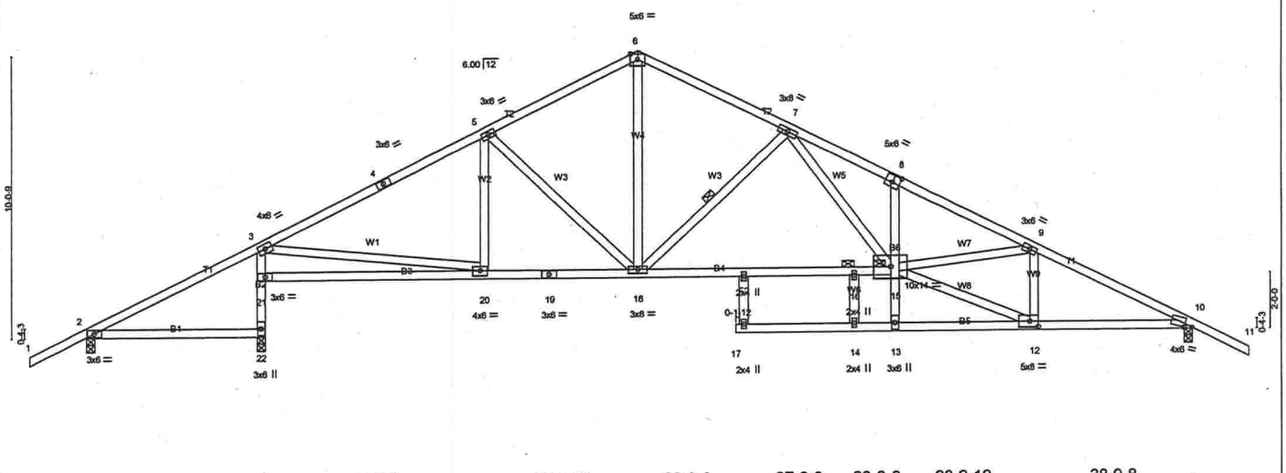

6-1-12	6-3-8	14-0-3	19-4-12	22-9-8	27-2-8	28-2-8	33-2-12	38-9-8
6-1-12	0-1-12	7-8-11	5-4-9	3-4-12	4-5-0	1-0-0	5-0-4	5-6-12

Plate Offsets (X,Y): [8:0-3-0,0-3-0], [10:0-3-5,0-0-11], [12:0-3-8,0-2-8]

LOADING (psf)		SPACING	2-0-0	CSI		DEFL	in	(loc)	l/defl	L/d	PLATES	GRIP
TCLL	20.0	Plates Increase	1.25	TC	0.47	Vert(LL)	-0.76	17	>513	240	MT20	244/190
TCDL	7.0	Lumber Increase	1.25	BC	1.00	Vert(TL)	-1.29	17	>303	180		
BCLL	10.0	Rep Stress Incr	YES	WB	0.84	Horz(TL)	0.15	10	n/a	n/a		
BCDL	5.0	Code FBC2004/TPI2002		(Matrix)							Weight: 231 lb	

LUMBER
TOP CHORD 2 X 4 SYP No.2
BOT CHORD 2 X 4 SYP No.2 *Except*
B2 2 X 4 SYP No.3, B6 2 X 4 SYP No.3
WEBS 2 X 4 SYP No.3

BRACING
TOP CHORD Structural wood sheathing directly applied or 3-1-7 oc purlins.
BOT CHORD Rigid ceiling directly applied or 4-1-15 oc bracing.
WEBS 1 Row at midpt 7-18
JOINTS 1 Brace at Jt(s): 15, 16

REACTIONS (lb/size) 2=332/0-3-8, 22=1712/0-3-8, 10=1546/0-3-8
Max Horz 2=174(load case 5)
Max Uplift2=-280(load case 6), 22=-600(load case 5), 10=-588(load case 6)
Max Grav 2=339(load case 9), 22=1712(load case 1), 10=1546(load case 1)

FORCES (lb) - Maximum Compression/Maximum Tension
TOP CHORD 1-2=0/47, 2-3=-62/306, 3-4=-1991/827, 4-5=-1887/841, 5-6=-1729/805, 6-7=-1719/798, 7-8=-3702/1391, 8-9=-3675/1295, 9-10=-2681/1038, 10-11=0/47
BOT CHORD 2-22=-45/0, 21-22=-1619/612, 3-21=-1481/634, 20-21=-101/215, 19-20=-398/1688, 18-19=-398/1688, 16-18=-551/2256, 15-16=-551/2256, 13-15=0/88, 8-15=-222/210, 14-17=0/0, 13-14=0/0, 12-13=-134/0, 10-12=-756/2321
WEBS 3-20=-299/1501, 5-20=-55/85, 5-18=-350/273, 6-18=-494/1203, 7-18=-1082/493, 7-15=-509/1735, 12-15=-747/2625, 9-15=-109/918, 9-12=-863/333, 14-16=0/178

NOTES
1) Unbalanced roof live loads have been considered for this design.
2) Wind: ASCE 7-02; 110mph (3-second gust); h=20ft; TCDL=4.2psf; BCDL=3.0psf; Category II; Exp B; enclosed; MWFRS gable end zone and C-C Exterior(2) zone; porch left exposed; Lumber DOL=1.60 plate grip DOL=1.60. This truss is designed for C-C for members and forces, and for MWFRS for reactions specified.
3) Provide mechanical connection (by others) of truss to bearing plate capable of withstanding 280 lb uplift at joint 2, 600 lb uplift at joint 22 and 588 lb uplift at joint 10.

LOAD CASE(S) Standard

NOVEMBER 03,2005 TRUSS DESIGN ENGINEER:
THOMAS E. MILLER PE 56877, BYRON K. ANDERSON PE 60987
STRUCTURAL ENGINEERING AND INSPECTIONS, INC. EB 9196
16105 N. FLORIDA AVE. STE B, LUTZ, FL 33549

Job	Truss	Truss Type	Qty	Ply	BRYAN ZECHER- LOT 94 EMERALD COVE
L138287	T17	SPECIAL	3	1	Dwg.#1103051161 Job Reference (optional)

Builders FirstSource, Lake City, Fl 32055 — 6.200 s Jul 13 2005 MiTek Industries, Inc. Wed Nov 02 09:02:40 2005 Page 1

-2-0-0	6-3-8	14-0-3	19-4-12	24-7-8	31-0-0	38-9-8	40-9-8
2-0-0	6-3-8	7-8-11	5-4-9	5-2-12	6-4-8	7-9-8	2-0-0

Scale = 1:71.0

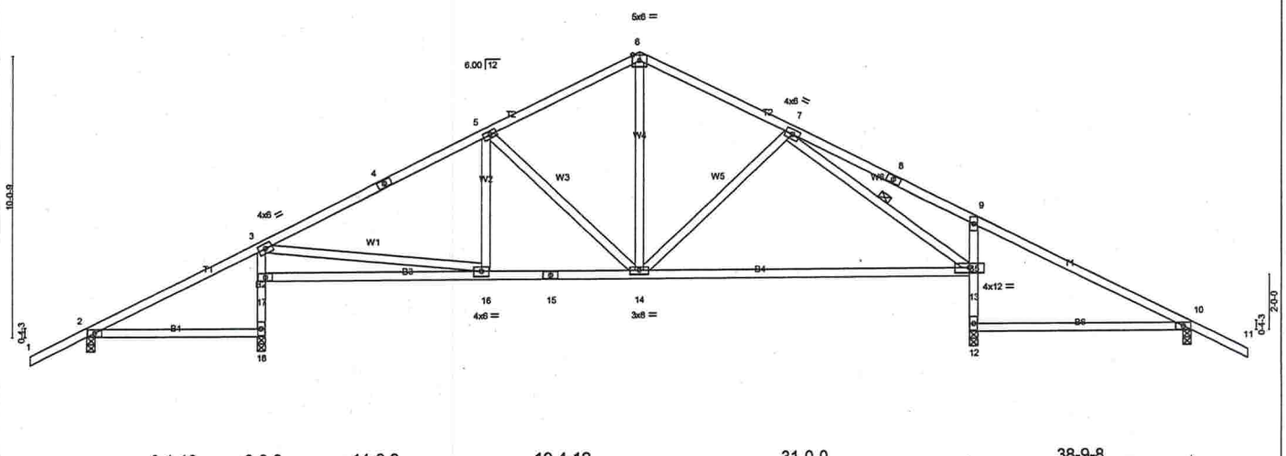

6-1-12	6-3-8	14-0-3	19-4-12	31-0-0	38-9-8
6-1-12	0-1-12	7-8-11	5-4-9	11-7-4	7-9-8

LOADING (psf)		SPACING	2-0-0	CSI		DEFL	in	(loc)	l/defl	L/d	PLATES	GRIP
TCLL	20.0	Plates Increase	1.25	TC	0.43	Vert(LL)	0.16	10-12	>559	240	MT20	244/190
TCDL	7.0	Lumber Increase	1.25	BC	0.81	Vert(TL)	-0.56	13-14	>532	180		
BCLL	10.0	Rep Stress Incr	YES	WB	0.38	Horz(TL)	0.03	10	n/a	n/a		
BCDL	5.0	Code FBC2004/TPI2002		(Matrix)							Weight: 201 lb	

LUMBER
TOP CHORD 2 X 4 SYP No.2
BOT CHORD 2 X 4 SYP No.2 *Except*
B2 2 X 4 SYP No.3, B5 2 X 4 SYP No.3
WEBS 2 X 4 SYP No.3

BRACING
TOP CHORD Structural wood sheathing directly applied or 4-11-14 oc purlins.
BOT CHORD Rigid ceiling directly applied or 4-3-1 oc bracing.
WEBS 1 Row at midpt 7-13

REACTIONS (lb/size) 2=355/0-3-8, 18=1306/0-3-8, 12=1414/0-3-8, 10=391/0-3-8
Max Horz 2=174(load case 5)
Max Uplift2=-287(load case 6), 18=-536(load case 5), 12=-464(load case 6), 10=-413(load case 6)
Max Grav 2=355(load case 1), 18=1306(load case 1), 12=1414(load case 1), 10=391(load case 10)

FORCES (lb) - Maximum Compression/Maximum Tension
TOP CHORD 1-2=0/47, 2-3=-96/320, 3-4=-1354/663, 4-5=-1250/677, 5-6=-1023/613, 6-7=-1017/608, 7-8=-123/432, 8-9=-206/410, 9-10=-85/306, 10-11=0/47
BOT CHORD 2-18=-54/27, 17-18=-1209/499, 3-17=-1073/523, 16-17=-133/286, 15-16=-273/1120, 14-15=-273/1120, 13-14=-210/899, 12-13=-1283/492, 9-13=-472/376, 10-12=-92/2
WEBS 3-16=-156/842, 5-16=0/71, 5-14=-402/310, 6-14=-333/580, 7-14=-123/254, 7-13=-1010/248

NOTES
1) Unbalanced roof live loads have been considered for this design.
2) Wind: ASCE 7-02; 110mph (3-second gust); h=20ft; TCDL=4.2psf; BCDL=3.0psf; Category II; Exp B; enclosed; MWFRS gable end zone and C-C Exterior(2) zone; porch left and right exposed; Lumber DOL=1.60 plate grip DOL=1.60. This truss is designed for C-C for members and forces, and for MWFRS for reactions specified.
3) All plates are 3x6 MT20 unless otherwise indicated.
4) Provide mechanical connection (by others) of truss to bearing plate capable of withstanding 287 lb uplift at joint 2, 536 lb uplift at joint 18, 464 lb uplift at joint 12 and 413 lb uplift at joint 10.

LOAD CASE(S) Standard

NOVEMBER 03,2005 TRUSS DESIGN ENGINEER:
THOMAS E. MILLER PE 56877, BYRON K. ANDERSON PE 60987
STRUCTURAL ENGINEERING AND INSPECTIONS, INC. EB 9196
16105 N. FLORIDA AVE. STE B, LUTZ, FL 33549

Job	Truss	Truss Type	Qty	Ply	BRYAN ZECHER- LOT 94 EMERALD COVE
L138287	T18	COMMON	4	1	Dwg.#1103051162 Job Reference (optional)

Builders FirstSource, Lake City, Fl 32055 — 6.200 s Jul 13 2005 MiTek Industries, Inc. Wed Nov 02 09:02:41 2005 Page 1

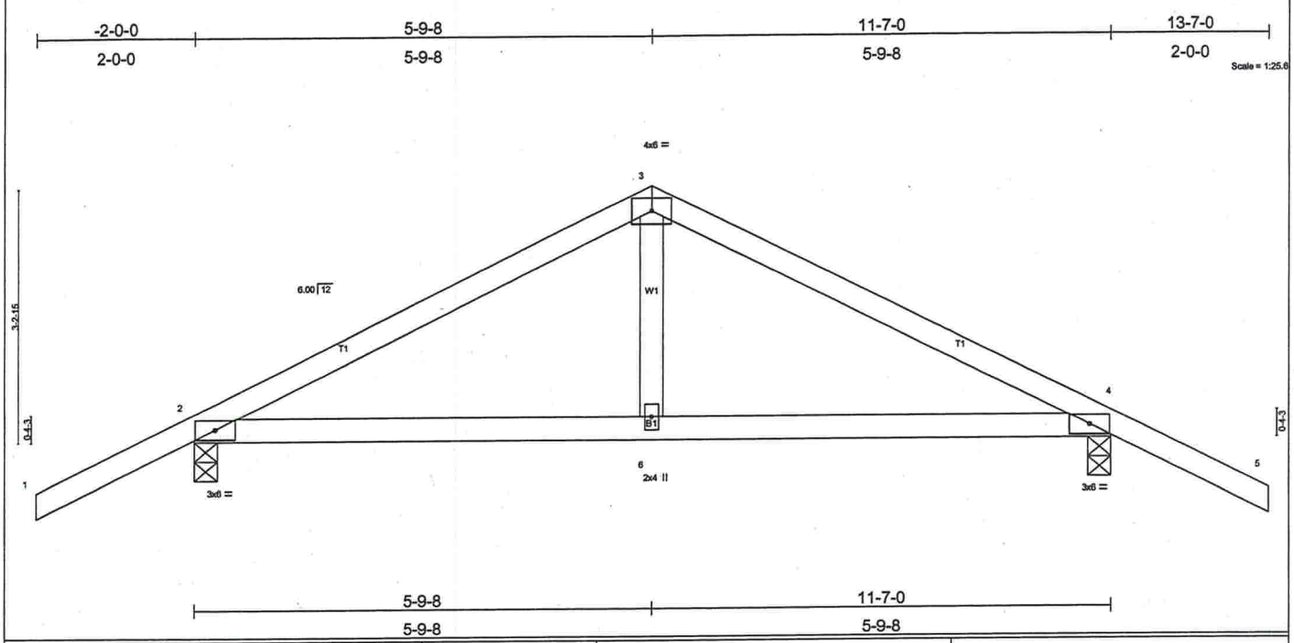

LOADING (psf)		SPACING	2-0-0	CSI		DEFL	in	(loc)	l/defl	L/d	PLATES	GRIP
TCLL	20.0	Plates Increase	1.25	TC	0.29	Vert(LL)	-0.03	2-6	>999	240	MT20	244/190
TCDL	7.0	Lumber Increase	1.25	BC	0.21	Vert(TL)	-0.05	2-6	>999	180		
BCLL	10.0	Rep Stress Incr	YES	WB	0.06	Horz(TL)	0.01	4	n/a	n/a		
BCDL	5.0	Code FBC2004/TPI2002		(Matrix)							Weight: 47 lb	

LUMBER
TOP CHORD 2 X 4 SYP No.2
BOT CHORD 2 X 4 SYP No.2
WEBS 2 X 4 SYP No.3

BRACING
TOP CHORD Structural wood sheathing directly applied or 6-0-0 oc purlins.
BOT CHORD Rigid ceiling directly applied or 10-0-0 oc bracing.

REACTIONS (lb/size) 2=590/0-3-8, 4=590/0-3-8
Max Horz 2=-79(load case 6)
Max Uplift2=-284(load case 5), 4=-284(load case 6)

FORCES (lb) - Maximum Compression/Maximum Tension
TOP CHORD 1-2=0/47, 2-3=-630/247, 3-4=-630/247, 4-5=0/47
BOT CHORD 2-6=-66/501, 4-6=-66/501
WEBS 3-6=0/193

NOTES
1) Unbalanced roof live loads have been considered for this design.
2) Wind: ASCE 7-02; 110mph (3-second gust); h=20ft; TCDL=4.2psf; BCDL=3.0psf; Category II; Exp B; enclosed; MWFRS gable end zone and C-C Exterior(2) zone; Lumber DOL=1.60 plate grip DOL=1.60. This truss is designed for C-C for members and forces, and for MWFRS for reactions specified.
3) Provide mechanical connection (by others) of truss to bearing plate capable of withstanding 284 lb uplift at joint 2 and 284 lb uplift at joint 4.

LOAD CASE(S) Standard

NOVEMBER 03,2005 TRUSS DESIGN ENGINEER:
THOMAS E. MILLER PE 56877, BYRON K. ANDERSON PE 60987
STRUCTURAL ENGINEERING AND INSPECTIONS, INC. EB 9196
16105 N. FLORIDA AVE. STE B, LUTZ, FL 33549

Job	Truss	Truss Type	Qty	Ply	BRYAN ZECHER- LOT 94 EMERALD COVE
L138287	T19H	HIP	1	1	Dwg.#1103051163 Job Reference (optional)

Builders FirstSource, Lake City, Fl 32055

6.200 s Jul 13 2005 MiTek Industries, Inc. Wed Nov 02 09:02:41 2005 Page 1

-2-0-0	5-0-0	6-7-0	11-7-0	13-7-0
2-0-0	5-0-0	1-7-0	5-0-0	2-0-0

Scale = 1:25.6

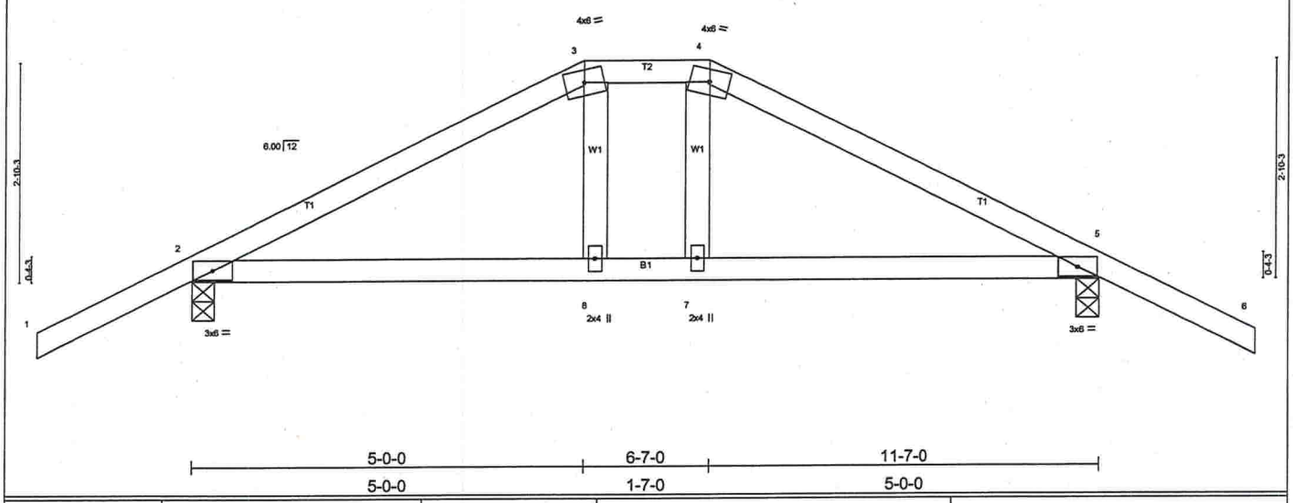

5-0-0	6-7-0	11-7-0
5-0-0	1-7-0	5-0-0

LOADING (psf)		SPACING	2-0-0	CSI		DEFL	in	(loc)	l/defl	L/d	PLATES	GRIP
TCLL	20.0	Plates Increase	1.25	TC	0.27	Vert(LL)	-0.04	2-8	>999	240	MT20	244/190
TCDL	7.0	Lumber Increase	1.25	BC	0.33	Vert(TL)	-0.07	2-8	>999	180		
BCLL	10.0	Rep Stress Incr	NO	WB	0.13	Horz(TL)	0.02	5	n/a	n/a		
BCDL	5.0	Code FBC2004/TPI2002		(Matrix)							Weight: 50 lb	

LUMBER
TOP CHORD 2 X 4 SYP No.2
BOT CHORD 2 X 4 SYP No.2
WEBS 2 X 4 SYP No.3

BRACING
TOP CHORD Structural wood sheathing directly applied or 5-6-2 oc purlins.
BOT CHORD Rigid ceiling directly applied or 10-0-0 oc bracing.

REACTIONS (lb/size) 2=877/0-3-8, 5=877/0-3-8
Max Horz 2=73(load case 4)
Max Uplift2=-429(load case 4), 5=-429(load case 5)

FORCES (lb) - Maximum Compression/Maximum Tension
TOP CHORD 1-2=0/47, 2-3=-1252/470, 3-4=-1074/453, 4-5=-1252/469, 5-6=0/47
BOT CHORD 2-8=-342/1053, 7-8=-347/1074, 5-7=-340/1053
WEBS 3-8=-128/407, 4-7=-128/407

NOTES
1) Unbalanced roof live loads have been considered for this design.
2) Wind: ASCE 7-02; 110mph (3-second gust); h=20ft; TCDL=4.2psf; BCDL=3.0psf; Category II; Exp B; enclosed; MWFRS gable end zone; Lumber DOL=1.60 plate grip DOL=1.60.
3) Provide adequate drainage to prevent water ponding.
4) Provide mechanical connection (by others) of truss to bearing plate capable of withstanding 429 lb uplift at joint 2 and 429 lb uplift at joint 5.
5) Girder carries hip end with 5-0-0 end setback.
6) Hanger(s) or other connection device(s) shall be provided sufficient to support concentrated load(s) 245 lb down and 126 lb up at 6-7-0, and 245 lb down and 126 lb up at 5-0-0 on bottom chord. The design/selection of such connection device(s) is the responsibility of others.
7) In the LOAD CASE(S) section, loads applied to the face of the truss are noted as front (F) or back (B).

LOAD CASE(S) Standard
1) Regular: Lumber Increase=1.25, Plate Increase=1.25
Uniform Loads (plf)
Vert: 1-3=-54, 3-4=-91(F=-37), 4-6=-54, 2-8=-30, 7-8=-50(F=-20), 5-7=-30
Concentrated Loads (lb)
Vert: 8=-245(F) 7=-245(F)

NOVEMBER 03,2005 TRUSS DESIGN ENGINEER:
THOMAS E. MILLER PE 56877, BYRON K. ANDERSON PE 60987
STRUCTURAL ENGINEERING AND INSPECTIONS, INC. EB 9196
16105 N. FLORIDA AVE. STE B, LUTZ, FL 33549

Job	Truss	Truss Type	Qty	Ply	BRYAN ZECHER- LOT 94 EMERALD COVE
L138287	T20H	HIP	1	1	Dwg.#1103051164 Job Reference (optional)

Builders FirstSource, Lake City, Fl 32055 — 6.200 s Jul 13 2005 MiTek Industries, Inc. Wed Nov 02 09:02:42 2005 Page 1

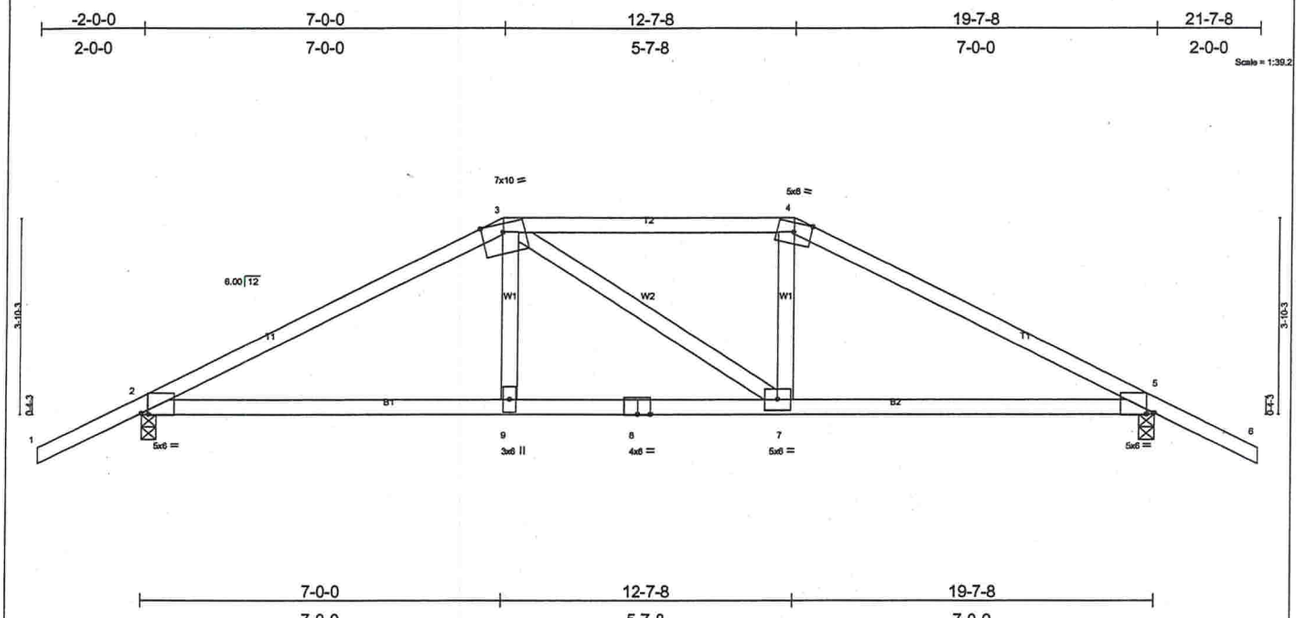

Plate Offsets (X,Y): [2:0-1-11,Edge], [5:0-1-11,Edge]

LOADING (psf)		SPACING 2-0-0		CSI		DEFL	in	(loc)	l/defl	L/d	PLATES	GRIP
TCLL	20.0	Plates Increase	1.25	TC	0.51	Vert(LL)	-0.15	7-9	>999	240	MT20	244/190
TCDL	7.0	Lumber Increase	1.25	BC	0.71	Vert(TL)	-0.24	7-9	>968	180		
BCLL	10.0	Rep Stress Incr	NO	WB	0.29	Horz(TL)	0.08	5	n/a	n/a		
BCDL	5.0	Code FBC2004/TPI2002		(Matrix)							Weight: 87 lb	

LUMBER
TOP CHORD 2 X 4 SYP No.2
BOT CHORD 2 X 4 SYP No.2
WEBS 2 X 4 SYP No.3

BRACING
TOP CHORD Structural wood sheathing directly applied or 3-3-5 oc purlins.
BOT CHORD Rigid ceiling directly applied or 6-1-12 oc bracing.

REACTIONS (lb/size) 2=1740/0-3-8, 5=1740/0-3-8
Max Horz 2=-87(load case 5)
Max Uplift2=-793(load case 4), 5=-793(load case 5)

FORCES (lb) - Maximum Compression/Maximum Tension
TOP CHORD 1-2=0/47, 2-3=-3065/1243, 3-4=-2692/1184, 4-5=-3066/1243, 5-6=0/47
BOT CHORD 2-9=-1039/2656, 8-9=-1048/2691, 7-8=-1048/2691, 5-7=-1002/2658
WEBS 3-9=-224/836, 3-7=-123/126, 4-7=-246/890

NOTES
1) Unbalanced roof live loads have been considered for this design.
2) Wind: ASCE 7-02; 110mph (3-second gust); h=20ft; TCDL=4.2psf; BCDL=3.0psf; Category II; Exp B; enclosed; MWFRS gable end zone; Lumber DOL=1.60 plate grip DOL=1.60.
3) Provide adequate drainage to prevent water ponding.
4) Provide mechanical connection (by others) of truss to bearing plate capable of withstanding 793 lb uplift at joint 2 and 793 lb uplift at joint 5.
5) Girder carries hip end with 7-0-0 end setback.
6) Hanger(s) or other connection device(s) shall be provided sufficient to support concentrated load(s) 539 lb down and 277 lb up at 12-7-8, and 539 lb down and 277 lb up at 7-0-0 on bottom chord. The design/selection of such connection device(s) is the responsibility of others.
7) In the LOAD CASE(S) section, loads applied to the face of the truss are noted as front (F) or back (B).

LOAD CASE(S) Standard
1) Regular: Lumber Increase=1.25, Plate Increase=1.25
Uniform Loads (plf)
Vert: 1-3=-54, 3-4=-118(F=-64), 4-6=-54, 2-9=-30, 7-9=-65(F=-35), 5-7=-30
Concentrated Loads (lb)
Vert: 9=-539(F) 7=-539(F)

NOVEMBER 03,2005 TRUSS DESIGN ENGINEER:
THOMAS E. MILLER PE 56877, BYRON K. ANDERSON PE 60987
STRUCTURAL ENGINEERING AND INSPECTIONS, INC. EB 9196
16105 N. FLORIDA AVE. STE B, LUTZ, FL 33549

Job	Truss	Truss Type	Qty	Ply	BRYAN ZECHER- LOT 94 EMERALD COVE
L138287	T21H	HIP	1	1	Dwg.#1103051165 Job Reference (optional)

Builders FirstSource, Lake City, Fl 32055 — 6.200 s Jul 13 2005 MiTek Industries, Inc. Wed Nov 02 09:02:43 2005 Page 1

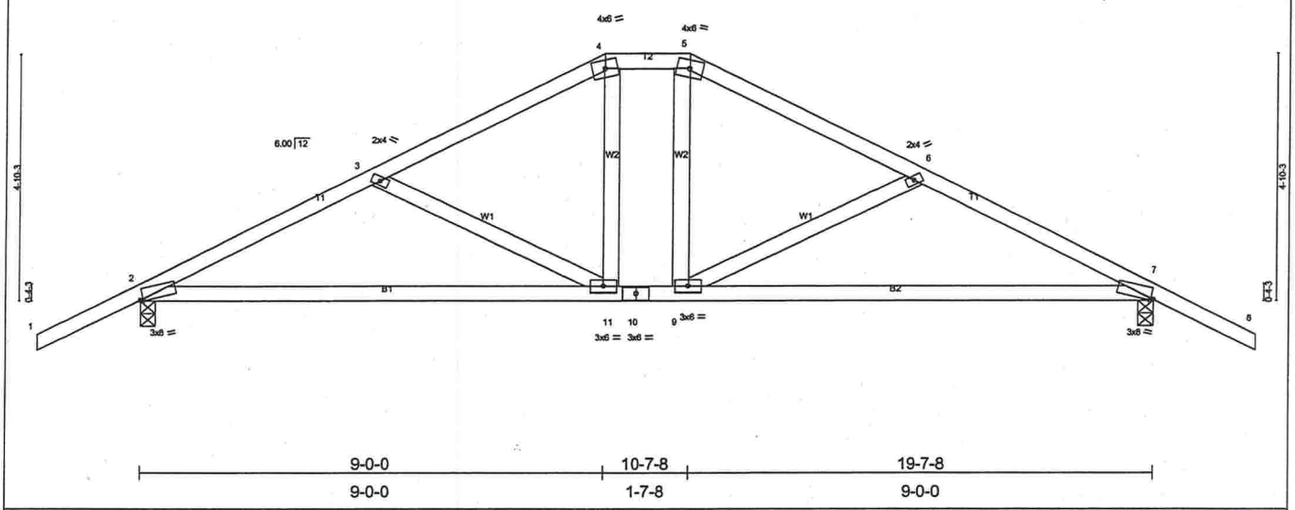

Plate Offsets (X,Y): [2:0-0-10,Edge], [7:0-0-10,Edge]

LOADING (psf)		SPACING	2-0-0	CSI		DEFL	in	(loc)	l/defl	L/d	PLATES	GRIP
TCLL	20.0	Plates Increase	1.25	TC	0.29	Vert(LL)	-0.17	2-11	>999	240	MT20	244/190
TCDL	7.0	Lumber Increase	1.25	BC	0.54	Vert(TL)	-0.27	2-11	>855	180		
BCLL	10.0	Rep Stress Incr	YES	WB	0.15	Horz(TL)	0.04	7	n/a	n/a		
BCDL	5.0	Code FBC2004/TPI2002		(Matrix)							Weight: 96 lb	

LUMBER
TOP CHORD 2 X 4 SYP No.2
BOT CHORD 2 X 4 SYP No.2
WEBS 2 X 4 SYP No.3

BRACING
TOP CHORD Structural wood sheathing directly applied or 5-3-1 oc purlins.
BOT CHORD Rigid ceiling directly applied or 10-0-0 oc bracing.

REACTIONS (lb/size) 2=928/0-3-8, 7=928/0-3-8
Max Horz 2=101(load case 5)
Max Uplift2=-385(load case 5), 7=-385(load case 6)

FORCES (lb) - Maximum Compression/Maximum Tension
TOP CHORD 1-2=0/47, 2-3=-1304/553, 3-4=-1037/434, 4-5=-883/441, 5-6=-1037/434, 6-7=-1304/553, 7-8=0/47
BOT CHORD 2-11=-334/1129, 10-11=-138/883, 9-10=-138/883, 7-9=-334/1129
WEBS 3-11=-309/228, 4-11=-61/283, 5-9=-61/283, 6-9=-309/228

NOTES
1) Unbalanced roof live loads have been considered for this design.
2) Wind: ASCE 7-02; 110mph (3-second gust); h=20ft; TCDL=4.2psf; BCDL=3.0psf; Category II; Exp B; enclosed; MWFRS gable end zone and C-C Exterior(2) zone; Lumber DOL=1.60 plate grip DOL=1.60. This truss is designed for C-C for members and forces, and for MWFRS for reactions specified.
3) Provide adequate drainage to prevent water ponding.
4) Provide mechanical connection (by others) of truss to bearing plate capable of withstanding 385 lb uplift at joint 2 and 385 lb uplift at joint 7.

LOAD CASE(S) Standard

NOVEMBER 03,2005 TRUSS DESIGN ENGINEER:
THOMAS E. MILLER PE 56877, BYRON K. ANDERSON PE 60987
STRUCTURAL ENGINEERING AND INSPECTIONS, INC. EB 9196
16105 N. FLORIDA AVE. STE B, LUTZ, FL 33549

Symbols

PLATE LOCATION AND ORIENTATION

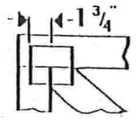

* Center plate on joint unless dimensions indicate otherwise. Dimensions are in inches. Apply plates to both sides of truss and securely seal.

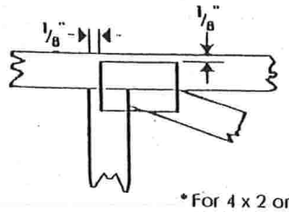

* For 4 x 2 orientation, locate plates 1/8" from outside edge of truss and vertical web.

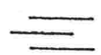

* This symbol indicates the required direction of slots in connector plates.

PLATE SIZE

4 x 4

The first dimension is the width perpendicular to slots. Second dimension is the length parallel to slots.

LATERAL BRACING

Indicates location of required continuous lateral bracing.

BEARING

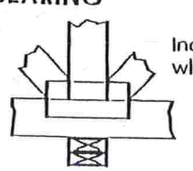

Indicates location of joints at which bearings (supports) occur.

Numbering System

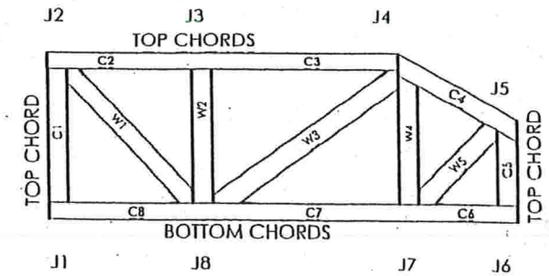

JOINTS AND CHORDS ARE NUMBERED CLOCKWISE AROUND THE TRUSS STARTING AT THE LOWEST JOINT FARTHEST TO THE LEFT.

WEBS ARE NUMBERED FROM LEFT TO RIGHT

CONNECTOR PLATE CODE APPROVALS

BOCA	96-31, 96-67
ICBO	3907, 4922
SBCCI	9667, 9432A
WISC/DILHR	960022-W, 970036-N
NER	561

MiTek Engineering Reference Sheet: MII-7473

General Safety Notes

Failure to Follow Could Cause Property Damage or Personal Injury

1. Provide copies of this truss design to the building designer, erection supervisor, property owner and all other interested parties.
2. Cut members to bear tightly against each other.
3. Place plates on each face of truss at each joint and embed fully. Avoid knots and wane at joint locations.
4. Unless otherwise noted, locate chord splices at ¼ panel length (± 6" from adjacent joint.)
5. Unless otherwise noted, moisture content of lumber shall not exceed 19% at time of fabrication.
6. Unless expressly noted, this design is not applicable for use with fire retardant or preservative treated lumber.
7. Camber is a non-structural consideration and is the responsibility of truss fabricator. General practice is to camber for dead load deflection.
8. Plate type, size and location dimensions shown indicate minimum plating requirements.
9. Lumber shall be of the species and size, and in all respects, equal to or better than the grade specified.
10. Top chords must be sheathed or purlins provided at spacing shown on design.
11. Bottom chords require lateral bracing at 10 ft. spacing, or less, if no ceiling is installed, unless otherwise noted.
12. Anchorage and / or load transferring connections to trusses are the responsibility of others unless shown.
13. Do not overload roof or floor trusses with stacks of construction materials.
14. Do not cut or alter truss member or plate without prior approval of a professional engineer.
15. Care should be exercised in handling, erection and installation of trusses.

Residential System Sizing Calculation

Summary

Model Home

Lake City, FL

Project Title:
TheSamuelModel

Class 3 Rating
Registration No. 0
Climate: North

11/7/2005

Location for weather data: Gainesville - Defaults: Latitude(29) Temp Range(M)
Humidity data: Interior RH (50%) Outdoor wet bulb (77F) Humidity difference(51gr.)

Winter design temperature	31	F	Summer design temperature	93	F
Winter setpoint	70	F	Summer setpoint	75	F
Winter temperature difference	39	F	Summer temperature difference	18	F
Total heating load calculation	**29793**	**Btuh**	**Total cooling load calculation**	**28117**	**Btuh**
Submitted heating capacity	% of calc	Btuh	Submitted cooling capacity	% of calc	Btuh
Total (Electric Heat Pump)	114.1	34000	Sensible (SHR = 0.75)	123.5	25500
Heat Pump + Auxiliary(0.0kW)	114.1	34000	Latent	113.9	8500
			Total (Electric Heat Pump)	120.9	34000

WINTER CALCULATIONS

Winter Heating Load (for 1500 sqft)

Load component			Load	
Window total	242	sqft	6849	Btuh
Wall total	1223	sqft	3533	Btuh
Door total	60	sqft	921	Btuh
Ceiling total	1754	sqft	2280	Btuh
Floor total	196	ft	6194	Btuh
Infiltration	200	cfm	8597	Btuh
Subtotal			**28374**	**Btuh**
Duct loss			1419	Btuh
TOTAL HEAT LOSS			**29793**	**Btuh**

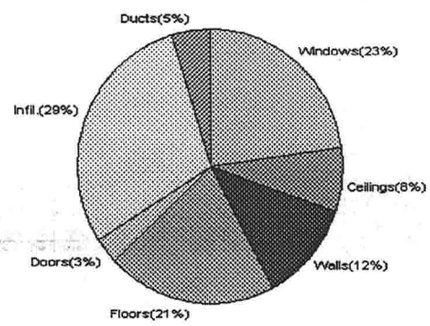

SUMMER CALCULATIONS

Summer Cooling Load (for 1500 sqft)

Load component			Load	
Window total	242	sqft	7199	Btuh
Wall total	1223	sqft	2008	Btuh
Door total	60	sqft	608	Btuh
Ceiling total	1754	sqft	2491	Btuh
Floor total			0	Btuh
Infiltration	175	cfm	3472	Btuh
Internal gain			3000	Btuh
Subtotal(sensible)			**18778**	**Btuh**
Duct gain			1878	Btuh
Total sensible gain			**20656**	**Btuh**
Latent gain(infiltration)			6081	Btuh
Latent gain(internal)			1380	Btuh
Total latent gain			**7461**	**Btuh**
TOTAL HEAT GAIN			**28117**	**Btuh**

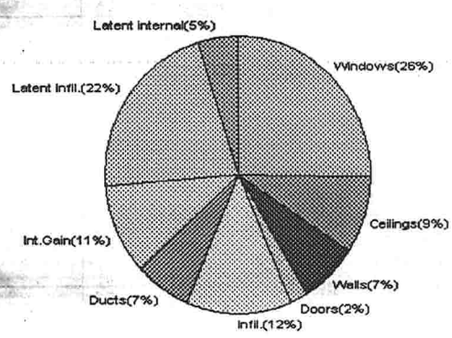

EnergyGauge® System Sizing based on ACCA Manual J.
PREPARED BY: [signature]
DATE: 11-7-05

System Sizing Calculations - Winter

Residential Load - Component Details

Model Home
Lake City, FL

Project Title:
TheSamuelModel

Class 3 Rating
Registration No. 0
Climate: North

Reference City: Gainesville (Defaults) Winter Temperature Difference: 39.0 F

11/7/2005

Window	Panes/SHGC/Frame/U	Orientation	Area X	HTM=	Load
1	2, Clear, Metal, DEF	N	45.0	28.3	1274 Btuh
2	2, Clear, Metal, DEF	NE	10.0	28.3	283 Btuh
3	2, Clear, Metal, DEF	N	45.0	28.3	1274 Btuh
4	2, Clear, Metal, DEF	NW	10.0	28.3	283 Btuh
5	2, Clear, Metal, DEF	E	3.0	28.3	85 Btuh
6	2, Clear, Metal, DEF	S	6.0	28.3	170 Btuh
7	2, Clear, Metal, DEF	S	30.0	28.3	849 Btuh
8	2, Clear, Metal, DEF	S	30.0	28.3	849 Btuh
9	2, Clear, Metal, DEF	W	3.0	28.3	85 Btuh
10	2, Clear, Metal, DEF	N	30.0	28.3	849 Btuh
11	2, Clear, Metal, DEF	E	30.0	28.3	849 Btuh
	Window Total		242		6849 Btuh
Walls	Type	R-Value	Area X	HTM=	Load
1	Frame - Adjacent	13.0	172	1.6	275 Btuh
2	Frame - Exterior	13.0	1051	3.1	3258 Btuh
	Wall Total		1223		3533 Btuh
Doors	Type		Area X	HTM=	Load
1	Insulated - Exter		20	18.3	367 Btuh
2	Insulated - Exter		20	18.3	367 Btuh
3	Insulated - Adjac		20	9.4	188 Btuh
	Door Total		60		921Btuh
Ceilings	Type	R-Value	Area X	HTM=	Load
1	Under Attic	30.0	1754	1.3	2280 Btuh
	Ceiling Total		1754		2280Btuh
Floors	Type	R-Value	Size X	HTM=	Load
1	Slab-On-Grade Edge Insul	0	196.0 ft(p)	31.6	6194 Btuh
	Floor Total		196		6194 Btuh
Infiltration	Type	ACH X	Building Volume	CFM=	Load
	Natural	0.80	15000(sqft)	200	8597 Btuh
	Mechanical			0	0 Btuh
	Infiltration Total			200	8597 Btuh

Totals for Heating	**Subtotal**	**28374 Btuh**
	Duct Loss(using duct multiplier of 0.05)	**1419 Btuh**
	Total Btuh Loss	**29793 Btuh**

Manual J Winter Calculations

Residential Load - Component Details (continued)

Model Home

Lake City, FL

Project Title:
TheSamuelModel

Class 3 Rating
Registration No. 0
Climate: North

11/7/2005

Key: Window types (SHGC - Shading coefficient of glass as SHGC numerical value or as clear or tint)
(Frame types - metal, wood or insulated metal)
(U - Window U-Factor or 'DEF' for default)
(HTM - ManualJ Heat Transfer Multiplier)

Key: Floor size (perimeter(p) for slab-on-grade or area for all other floor types)

System Sizing Calculations - Summer

Residential Load - Component Details

Model Home

Lake City, FL

Project Title:
TheSamuelModel

Class 3 Rating
Registration No. 0
Climate: North

Reference City: Gainesville (Defaults) Summer Temperature Difference: 18.0 F 11/7/2005

Window	Type Panes/SHGC/U/InSh/ExSh	Ornt	Overhang Len	Overhang Hgt	Window Area(sqft) Gross	Shaded	Unshaded	HTM Shaded	HTM Unshaded	Load
1	2, Clear, DEF, N, N	N	2	5.5	45.0	0.0	45.0	22	22	990 Btuh
2	2, Clear, DEF, N, N	NE	14.5	7	10.0	0.0	10.0	22	50	500 Btuh
3	2, Clear, DEF, N, N	N	12	5.25	45.0	0.0	45.0	22	22	990 Btuh
4	2, Clear, DEF, N, N	NW	8.5	7	10.0	0.0	10.0	22	50	500 Btuh
5	2, Clear, DEF, N, N	E	2	1.5	3.0	3.0	0.0	22	72	66 Btuh
6	2, Clear, DEF, N, N	S	9.5	7.5	6.0	6.0	0.0	22	37	132 Btuh
7	2, Clear, DEF, N, N	S	2	5.5	30.0	30.0	0.0	22	37	660 Btuh
8	2, Clear, DEF, N, N	S	2	8	30.0	30.0	0.0	22	37	660 Btuh
9	2, Clear, DEF, N, N	W	1.5	3.5	3.0	0.0	3.0	22	72	216 Btuh
10	2, Clear, DEF, N, N	N	1.5	5.5	30.0	0.0	30.0	22	22	660 Btuh
11	2, Clear, DEF, N, N	E	1.5	5.5	30.0	6.7	23.3	22	72	1825 Btuh
	Window Total				242					7199 Btuh

Walls	Type	R-Value	Area	HTM	Load
1	Frame - Adjacent	13.0	172.0	1.0	179 Btuh
2	Frame - Exterior	13.0	1051.0	1.7	1829 Btuh
	Wall Total		1223.0		2008 Btuh

Doors	Type	Area	HTM	Load
1	Insulated - Exter	20.0	10.1	203 Btuh
2	Insulated - Exter	20.0	10.1	203 Btuh
3	Insulated - Adjac	20.0	10.1	203 Btuh
	Door Total	60.0		608 Btuh

Ceilings	Type/Color	R-Value	Area	HTM	Load
1	Under Attic/Dark	30.0	1754.0	1.4	2491 Btuh
	Ceiling Total		1754.0		2491 Btuh

Floors	Type	R-Value	Size	HTM	Load
1	Slab-On-Grade Edge Insulation	0.0	196.0 ft(p)	0.0	0 Btuh
	Floor Total		196.0		0 Btuh

Infiltration	Type	ACH	Volume	CFM=	Load
	Natural	0.70	15000	175.4	3472 Btuh
	Mechanical			0	0 Btuh
	Infiltration Total			175	3472 Btuh

Internal gain	Occupants		Btuh/occupant		Appliance	Load
	6	X	300	+	1200	3000 Btuh

Manual J Summer Calculations

Residential Load - Component Details (continued)

Model Home

Lake City, FL

Project Title:
TheSamuelModel

Class 3 Rating
Registration No. 0
Climate: North

11/7/2005

Totals for Cooling	Subtotal	18778	Btuh
	Duct gain(using duct multiplier of 0.10)	1878	Btuh
	Total sensible gain	20656	Btuh
	Latent infiltration gain (for 51 gr. humidity difference)	6081	Btuh
	Latent occupant gain (6 people @ 230 Btuh per person)	1380	Btuh
	Latent other gain	0	Btuh
	TOTAL GAIN	28117	Btuh

Key: Window types (SHGC - Shading coefficient of glass as SHGC numerical value or as clear or tint)
(U - Window U-Factor or 'DEF' for default)
(InSh - Interior shading device: none(N), Blinds/Daperies(B) or Roller Shades(R))
(ExSh - Exterior shading device: none(N) or numerical value)
(Ornt - compass orientation)

GARAGE HEADER (84)

Anthony POWER HEADER®

26F$_b$ - 1.9E

ENGINEERED WOOD SECTION PROPERTIES AND LOAD CAPACITIES

ALLOWABLE DESIGN STRESSES (PSI):

FLEXURAL STRESS (F_b) =	2600
COMPRESSION PERP. TO GRAIN ($F_{c\perp}$) =	740
HORIZONTAL SHEAR (F_v) =	225
MODULUS OF ELASTICITY (MOE) =	1.9×10^6

[illegible]	7.7	9.0	10.4	11.7	12.9	14.2	15.5
[illegible]	326	514	789	1115	1521	2014	2604
[illegible]	8865	12015	15996	20145	24772	29877	35460
[illegible]	3908	4550	5250	5892	6533	7175	7817

NOTES:

1. Beam weights are based on 38 pcf.
2. Moment capacities are based on a span of 21 feet and must be modified for other spans.
3. Flexural Stress, F_b, shall be modified by the Volume Factor, C_v as outlined in AITC 117 - Design 1993 and the NDS for Wood Construction 1997.
4. Allowable design properties and load capacities are based on a load duration of 100 percent and dry use conditions.
5. The AITC NER 466 was used in calculating the above allowable design stresses for POWER HEADER®.

GARAGE HEADER COMPARISONS

[illegible]	810 / 540	3-1/2" x 8-3/8"	3-1/2" x 9-5/8"	3-1/2" x 9"	3-1/2" x 9-1/4"	3-1/2" x 11-1/4"
[illegible]	990 / 720	3-1/2" x 9-3/4"	3-1/2" x 9-5/8"	3-1/2" x 10-1/2"	3-1/2" x 9-1/4"	3-1/2" x 11-1/4"
[illegible]	640 / 400	3-1/2" x 12-5/8"	3-1/2" x 13-3/4"	3-1/2" x 13-1/2"	3-1/2" x 14"	3-1/2" x 14"
[illegible]	765 / 510	3-1/2" x 14"	3-1/2" x 15-1/8"	3-1/2" x 15"	3-1/2" x 14"	3-1/2" x 16"
[illegible]	750 / 480	3-1/2" x 15-3/8"	3-1/2" x 16-1/2"	3-1/2" x 16-1/2"	3-1/2" x 16"	3-1/2" x 18"
[illegible]	900 / 600	3-1/2" x 16-3/4"	3-1/2" x 17-7/8"	3-1/2" x 18"	3-1/2" x 16"	—

For more information on POWER HEADER®, or other laminated structural products from Anthony Forest Products Company please call 1-800-221-2326 or FAX at 870-862-6502.

POWER HEADER® is a trademark of
Anthony Forest Products Company
Post Office Box 1877 • El Dorado, Arkansas 71731
Internet address: http:// www.anthonyforest.com
e-mail: info@anthonyforest.com

Distributed by:

WOODFORD PLYWOOD, INC.
"Structural Wood Products"

11960 West Beaver Street
Jacksonville, Florida 32220
(904) 695-9080
(800) 447-6568
FAX (904) 695-9160

Anthony POWER HEADER®

26F$_b$ - 1.9E

3-1/2" WIDTH GARAGE HEADER PLF CAPACITY

844	896		1216		1573							
161	207	254	330	390	510	552	669	752	824			
114	145	180	231	277	359	391	510	534	653	707	789	

844	975		1322									
161	207	254	330	390	510	552	724	752	897			
114	145	180	231	277	359	391	510	534	699	693		

562	778	888	1056	1363	1367		1582					
107	153	169	245	260	380	368	540	501	715	664	864	840
76	107	120	171	185	267	261	380	356	521	471	684	609	813

NOTES:

1. Values shown are the maximum uniform loads in pounds per lineal foot (PLF) that can be applied to the header. Header weight has been subtracted from the allowable total load.
2. Tables are based on simple span uniform load conditions using a design span equal to the center-to-center of bearing. Non-shaded areas are based on 3" of bearing at each support, shaded areas on 4.5" of bearing, and shaded & outlined areas on 6" of bearing at supports.
3. Headers are assumed to be loaded on the top edge with continuous lateral support along compression edge.
4. When no live load is listed, total load controls.
5. Deflection limits are listed within the PLF table heading.

GARAGE HEADER SIZING USING PLF TABLES:

To size a garage header supporting roof only, determine the total load & live load in pounds per lineal foot (PLF). Check the appropriate PLF table for a header supporting roof loads only (125% Non-Snow vs. 115% Snow) and select a member with a total load and live load capacity which meets or exceeds the design load for the rough opening size. For a garage header supporting roof, wall, and floor framing, determine the total load and live load in pounds per lineal foot (PLF). Select a header size from the roof, wall, and floor table (100% load duration) which has a total load <u>and</u> live load capacity equal to or greater than the design load for the appropriate rough opening.

XX
Glazed Inswing Unit

COP-WL-JH4142-02

WOOD-EDGE STEEL DOORS

APPROVED ARRANGEMENT:

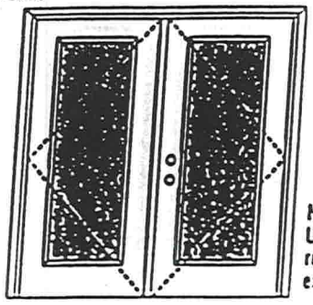

Warnock Hersey

Test Data Review Certificate #30264447A and CCP/Test Report Validation Matrix #30264447A-001 provides additional information - available from the ITS/WH website (www.etsamia.com), the Masonite website (www.masonite.com) or the Masonite technical center

Note:
Units of other sizes are covered by this report as long as the panels used do not exceed 3'0" x 6'8".

Double Door
Maximum unit size = 6'0" x 6'8"

Design Pressure
+40.5/-40.5
Unless other areas special overlaid design is used

Large Missile Impact Resistance
Hurricane protective system (shutters) is REQUIRED

Actual design pressure and impact resistance requirements for a specific building must be determined based on the specific location of the building and the specific building codes to identify the actual requirements

MINIMUM ASSEMBLY DETAIL:

Compliance requires that minimum assembly details have been followed - see MAD-WL-MAC000-02 and MAD-WL-MAC041-02.

MINIMUM INSTALLATION DETAIL:

Compliance requires that minimum installation details have been followed - see MID-WL-MA0000-02

APPROVED DOOR STYLES:

1/4 GLASS:

100 Series | 123, 125 Series | 136 Series | 630 Series | 870 Series

1/2 GLASS:

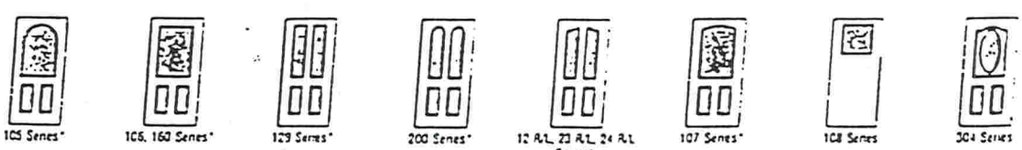

105 Series* | 106, 160 Series* | 129 Series* | 200 Series* | 12 R/L, 23 R/L, 24 R/L Series* | 107 Series* | 108 Series | 304 Series

*This glass kit may also be used in the following door styles: 5-panel, 5-panel with scroll, Eyebrow 5-panel, Eyebrow 5-panel with scroll.

Johnson
EntrySystems

June 17, 2002
Our continuing program of product improvement makes specifications, design and products subject to change without notice

PREMDOOR Premium Security Doors

Exclusively from Masonite
Masonite International Corporation

XX
Glazed Inswing Unit

COP-WL-JH4142-02

WOOD-EDGE STEEL DOORS

APPROVED DOOR STYLES:

3/4 GLASS:


404 Series


410 Series

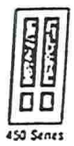
450 Series

FULL GLASS:


109 Series

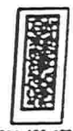
114, 120, 122 Series


152 Series


149 Series


300 Series

CERTIFIED TEST REPORTS:

NCTL 210-1897-7, 8, 9, 10, 11, 12; NCTL 210-1861-4, 5, 6, 10, 11, 12, NCTL 210-2185-1, 2, 3

Certifying Engineer and License Number: Barry D. Portney, P.E. / 16258

Unit Tested in Accordance with Miami-Dade ECCO PA202.

Evaluation report NCTL-210-2794-1

Door panels constructed from 26-gauge 0.017" thick steel skins. Both stiles constructed from wood. Top end rails constructed of 0.041" steel. Bottom end rails constructed of 0.021" steel. Interior cavity of slab filled with rigid polyurethane foam core. Slab glazed with insulated glass mounted in a rigid plastic lip lite surround.

Frame constructed of wood with an extruded aluminum threshold.

PRODUCT COMPLIANCE LABELING:

TESTED IN
ACCORDANCE WITH
MIAMI-DADE ECCO PA202

COMPANY NAME
CITY, STATE

To the best of my knowledge and ability the above side-hinged exterior door unit conforms to the requirements of the 2001 Florida Building Code, Chapter 17 (Structural Tests and Inspections).

Kurt L Balthazor

State of Florida, Professional Engineer
Kurt Balthazor, P.E. – License Number 56533

Warnock Hersey

Test Data Review Certificate #3025447A and COP/Test Report Validation Matrix #3025447A-001 provides additional information - available from the ITS/WH website (www.itsweb.com), the Masonite website (www.masonite.com) or the Masonite technical center.

Johnson EntrySystems

June 17, 2002

PREMDOR Premium Quality Doors

Exclusively from Masonite®
Masonite International Corporation

X
Opaque Inswing Unit

COP-WL-JH4101-02

WOOD-EDGE STEEL DOORS

APPROVED ARRANGEMENT:

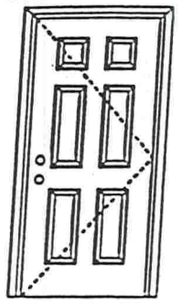

Warnock Hersey

Test Data Review Certificate #3026447A and COP/Test Report Validation Matrix #3026447A-001 provides additional information - available from the ITS/WH website (www.etsemko.com), the Masonite website (www.masonite.com) or the Masonite technical center

Note:
Units of other sizes are covered by this report as long as the panel used does not exceed 3'0" x 6'8".

Single Door
Maximum unit size = 3'0" x 6'8"

Design Pressure
+66.0/-66.0
limited water unless special threshold design is used

Large Missile Impact Resistance
Hurricane protective system (shutters) is NOT REQUIRED.

Actual design pressure and impact resistant requirements for a specific building design are determined by ASCE 7 or the state or local building codes specify the motion requires

MINIMUM ASSEMBLY DETAIL:

Compliance requires that minimum assembly details have been followed – see MAD-WL-MA2001-02

MINIMUM INSTALLATION DETAIL:

Compliance requires that minimum installation details have been followed – see MID-WL-MA2001-02

APPROVED DOOR STYLES:

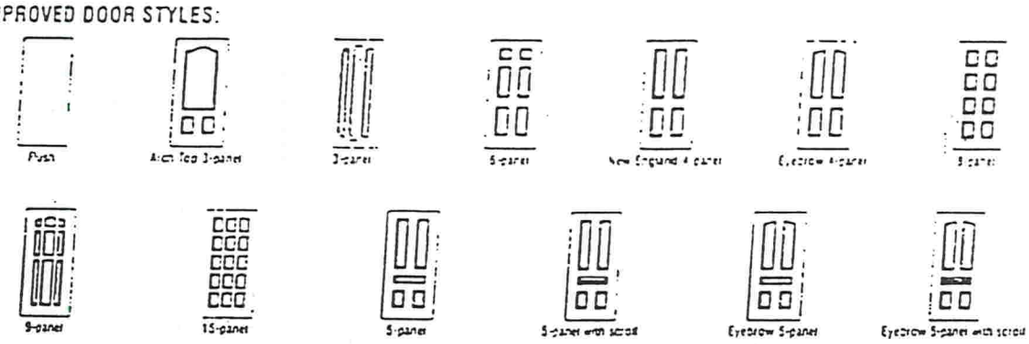

Johnson EntrySystems

June 17, 2002
Our continuing program of product improvement makes specifications, design and product price subject to change without notice

PREMDOR Installation Premium Quality Doors

Exclusively from Masonite
Masonite International Corporation

X
Opaque Inswing Unit

COP-WL-JH4101-02

WOOD-EDGE STEEL DOORS

CERTIFIED TEST REPORTS:

NCTL 210-2185-1, 2, 3

Certifying Engineer and License Number: Barry D. Portney, P.E. / 16258.

Unit Tested in Accordance with Miami-Dade BCCO PA201, PA202 and PA203.

Door panels constructed from 26-gauge 0.017" thick steel skins. Both stiles constructed from wood. Top end rails constructed of 0.041" steel. Bottom end rails constructed of 0.021" steel. Interior cavity of slab filled with rigid polyurethane foam core.

Frame constructed of wood with an extruded aluminum threshold.

PRODUCT COMPLIANCE LABELING:

TESTED IN ACCORDANCE WITH
MIAMI-DADE BCCO
PA201, PA202 & PA203

COMPANY NAME
CITY STATE

To the best of my knowledge and ability the above side-hinged exterior door unit conforms to the requirements of the 2001 Florida Building Code, Chapter 17 (Structural Tests and Inspections).

Kurt L Balthazor

State of Florida, Professional Engineer
Kurt Balthazor, P.E. – License Number 56533

Warnock Hersey

Test Data Review Certificate #3025447A and COP/Test Report Validation Matrix #3025447A-001 provides additional information - available from the ITS/WH website (www.itsemag.com), the Masonite website (www.masonite.com) or the Masonite technical center.

Johnson EntrySystems

June 17, 2002
Our continuing program of product improvement makes specifications, details and product finish subject to change without notice.

PREMDOOR Premium Quality Doors

Exclusively from Masonite®
Masonite International Corporation

WINDOWS

AAMA/NWWDA 101/I.S.2-97
TEST REPORT SUMMARY

Rendered to:

MI HOME PRODUCTS, INC.

SERIES/MODEL: 650 Fin
TYPE: Aluminum Single Hung Window

Title of Test	Results
Rating	H-R40 52 x 72
Overall Design Pressure	+45.0 psf -47.2 psf
Operating Force	11 lb max.
Air Infiltration	0.13 cfm/ft²
Water Resistance	6.00 psf
Structural Test Pressure	+67.5 psf -70.8 psf
Deglazing	Passed
Forced Entry Resistance	Grade 10

Reference should be made to Report No. 01-41134.01 dated 03/26/02 for complete test specimen description and data.

For ARCHITECTURAL TESTING, INC.

Mark A. Hess, Technician

MAH:nlb

1 APRIL 2002

ALLEN M. REEVES
LICENSE
NO. 15354
STATE OF
FLORIDA
PROFESSIONAL ENGINEER

Architectural Testing

AAMA/NWWDA 101/I.S.2-97 TEST REPORT

Rendered to

MI HOME PRODUCTS, INC.
650 West Market Street
P.O. Box 370
Gratz, Pennsylvania 17030-0370

Report No: 01-41134.01
Test Date: 03/07/02
Report Date: 03/26/02
Expiration Date: 03/07/06

Project Summary: Architectural Testing, Inc. (ATI) was contracted by MI Home Products, Inc. to perform tests on Series/Model 650 Fin, aluminum single hung window at their facility located in Elizabethville, Pennsylvania. The samples tested successfully met the performance requirements for a H-R40 52 x 72 rating.

Test Specification: The test specimen was evaluated in accordance with AAMA/NWWDA 101/I.S.2-97, *Voluntary Specifications for Aluminum, Vinyl (PVC) and Wood Windows and Glass Doors.*

Test Specimen Description

Series/Model: 650 Fin

Type: Aluminum Single Hung Window

Overall Size: 4' 4-1/4" wide by 6' 0-3/8" high

Active Sash Size: 4' 1-3/4" wide by 3' 0-5/8" high

Daylight Opening Size: 3' 11-3/8" wide by 2' 9-1/2" high

Screen Size: 4' 0-1/4" wide by 2' 11-1/8" high

Finish: All aluminum was white.

Glazing Details: The active and fixed lites utilized 5/8" thick, sealed insulating glass constructed from two sheets of 1/8" thick, clear annealed glass and a metal reinforced butyl spacer system. The active sash was channel glazed utilizing a flexible vinyl wrap around gasket. The fixed lite was interior glazed against double-sided adhesive foam tape and secured with PVC snap-in glazing beads.

130 Derry Court
York, PA 17402-9405
phone: 717.764.7700
fax: 717.764.4129
www.archtest.com

Allen H. Reeves
1 APRIL 2002

ALLEN H. REEVES
No. 19354
STATE OF FLORIDA
PROFESSIONAL ENGINEER

Test Specimen Description: (Continued)

Weatherstripping:

Description	Quantity	Location
0.230" high by 0.270" backed polypile with center fin	1 Row	Fixed meeting rail
0.250" high by 0.187" backed polypile with center fin	2 Rows	Active sash stiles
1/2" x 1/2" dust plug	4 Pieces	Active sash, top and bottom of stiles
1/4" foam-filled vinyl bulb seal	1 Row	Active sash, bottom rail

Frame Construction: The frame was constructed of extruded aluminum with coped, butted, and sealed corners fastened with two #8 x 1" screws through the head and sill into each jamb screw boss. End caps were utilized on the ends of the fixed meeting rail and secured with two 1-1/4" screws per cap. Meeting rail was secured to the frame utilizing two 1-1/4" screws.

Sash Construction: The sash was constructed of extruded aluminum with coped, butted, and sealed corners fastened with two #8 x 1-1/2" screws through the rails into each jamb screw boss.

Screen Construction: The screen was constructed from roll-formed aluminum with keyed corners. The fiberglass mesh was secured with a flexible spline.

Hardware:

Description	Quantity	Location
Metal cam lock with keeper		Midspan, active meeting rail with keeper adjacent on fixed meeting rail
Plastic tilt latch	2	Active sash, meeting rail ends
Metal tilt pin	2	Active sash, bottom rail ends
Balance assembly	2	One in each jamb
Screen plunger	2	4" from rail ends on top rail

ALLEN H. REEVES, P.E.
CERTIFICATE NO. 18776
STATE OF FLORIDA
PROFESSIONAL ENGINEER

Allen H. Reeves
1 APRIL 2002

Test Specimen Description: (Continued)

Drainage: Sloped sill

Reinforcement: No reinforcement was utilized.

Installation: The test specimen was installed into a 2 x 8 #2 Spruce-Pine-Fir wood test buck with #8 x 1-5/8" drywall screws every 8" on center around the nail fin. Polyurethane was used as a sealant under the nail fin and around the exterior perimeter.

Test Results:

The results are tabulated as follows

Paragraph	Title of Test - Test Method	Results	Allowed
2.2.1.6.1	Operating Force	11 lbs	30 lbs max
	Air Infiltration (ASTM E 283-91) @ 1.57 psf (25 mph)	0.13 cfm/ft²	0.3 cfm/ft² max

Note #1: The tested specimen meets the performance levels specified in AAMA/NWWDA 101/I.S. 2-97 for air infiltration.

	Water Resistance (ASTM E 547-00) (with and without screen) WTP = 2.86 psf	No leakage	No leakage
2.1.4.1	Uniform Load Deflection (ASTM E 330-97) (Measurements reported were taken on the meeting rail) (Loads were held for 33 seconds)		
	@ 25.9 psf (positive)	0.42"*	0.26" max.
	@ 34.7 psf (negative)	0.43"*	0.26" max.

**Exceeds L/175 for deflection, but passes all other test requirements.*

2.1.4.2	Uniform Load Structural (ASTM E 330-97) (Measurements reported were taken on the meeting rail) (Loads were held for 10 seconds)		
	@ 38.9 psf (positive)	0.02"	0.18" max.
	@ 52.1 psf (negative)	0.02"	0.18" max.

Allen M. Reeves
1 APRIL 2002

ALLEN M. REEVES
CERTIFICATE
NO. 13377
STATE OF
FLORIDA
PROFESSIONAL ENGINEER

Test Specimen Description: (Continued)

Paragraph	Title of Test - Test Method	Results	Allowed
2.2.1.6.2	**Deglazing Test (ASTM E 987)**		
	In operating direction at 70 lbs		
	Meeting rail	0.12"/25%	0.50"/100%
	Bottom rail	0.12"/25%	0.50"/100%
	In remaining direction at 50 lbs		
	Left stile	0.06"/12%	0.50"/100%
	Right stile	0.06"/12%	0.50"/100%
	Forced Entry Resistance (ASTM F 588-97)		
	Type: A Grade: 10		
	Lock Manipulation Test	No entry	No entry
	Tests A1 through A5	No entry	No entry
	Test A7	No entry	No entry
	Lock Manipulation Test	No entry	No entry

Optional Performance

4.3	Water Resistance (ASTM E 547-00) (with and without screen) WTP = 6.00 psf	No leakage	No leakage
	Uniform Load Deflection (ASTM E 330-97) (Measurements reported were taken on the meeting rail) (Loads were held for 33 seconds)		
	@ 45.0 psf (positive)	0.47"*	0.26" max.
	@ 47.2 psf (negative)	0.46"*	0.26" max.

**Exceeds L/175 for deflection, but passes all other test requirements.*

Uniform Load Structural (ASTM E 330-97) (Measurements reported were taken on the meeting rail) (Loads were held for 10 seconds)		
@ 67.5 psf (positive)	0.05"	0.18" max.
@ 70.8 psf (negative)	0.05"	0.18" max.

Allen M. Reyes
1 APRIL 2002

ALLEN M. REYES
LICENSE NO. 18334
STATE OF FLORIDA
PROFESSIONAL ENGINEER

Detailed drawings, representative samples of the test specimen, and a copy of this report will be retained by ATI for a period of four years. The above results were secured by using the designated test methods and they indicate compliance with the performance requirements of the above referenced specification. This report does not constitute certification of this product, which may only be granted by the certification program administrator.

For ARCHITECTURAL TESTING, INC:

Mark A. Hess
Technician

Allen N. Reeves, P.E.
Director - Engineering Services
1 APRIL 2002

MAH:nlb
01-41134.01

ALLEN N. REEVES
CERTIFICATE NO. 17955
STATE OF FLORIDA
PROFESSIONAL ENGINEER

SHINGLES

ELK Premium Roofing

March 6, 2002

Subject: Elk Product Approval Information

All Prestique® and Capstone® products manufactured in Tuscaloosa, AL are certified under the Miami – Dade County Building Code Office (BCCO). These products also meet the requirements for the Florida Building Code since they are MD approved. The following test protocols must be passed by each of the products in order for MD product certification:

ASTM D3462
PA 100 (110 mph uplift and wind driven rain resistance)
PA 107 (Modified ASTM D3161 - 110 mph wind uplift resistance)

The nailing patterns that were used during the PA 100 and PA 107 wind test protocols for the Prestique and Capstone products are listed below. Also listed below are the Miami – Dade Notice of Acceptance Numbers (NOA).

Raised Profile, Prestique High Definition, Prestique 25, or Prestique 30 –
PA 100 = 4 nails
PA 107 = 5 nails
MD NOA# = 01-1226.04

Prestique I 55 or Prestique I* –
PA 100 = 4 nails
PA 107 = 5 nails
MD NOA# = 01-1226.05

Prestique Plus or Prestique Gallery Collection* –
PA 100 = 4 nails
PA 107 = 4 nails
MD NOA# = 01-1226.03

Capstone*
PA 100 = 4 Nails
PA 107 = 4 Nails
MD NOA# = 01-0523.01

* As per the Elk Limited Warranty, six nails are required for the Elk high wind warranty

If there are any questions please contact:

Mike Reed – Technical Manager or Daniel DeJarnette – QA Engineer
(205) 342-0287 (205) 342-0293

DIRECTIONS FOR APPLICATION

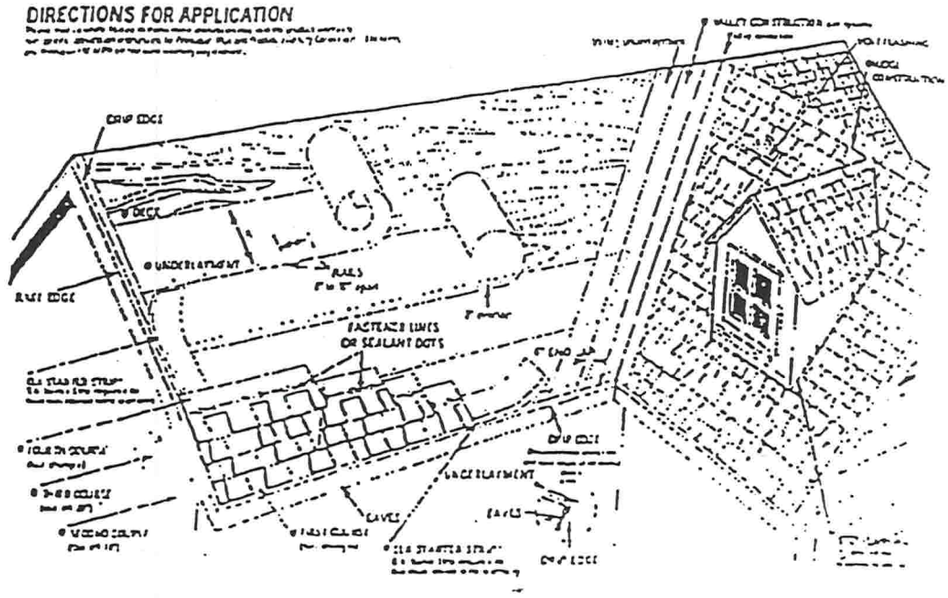

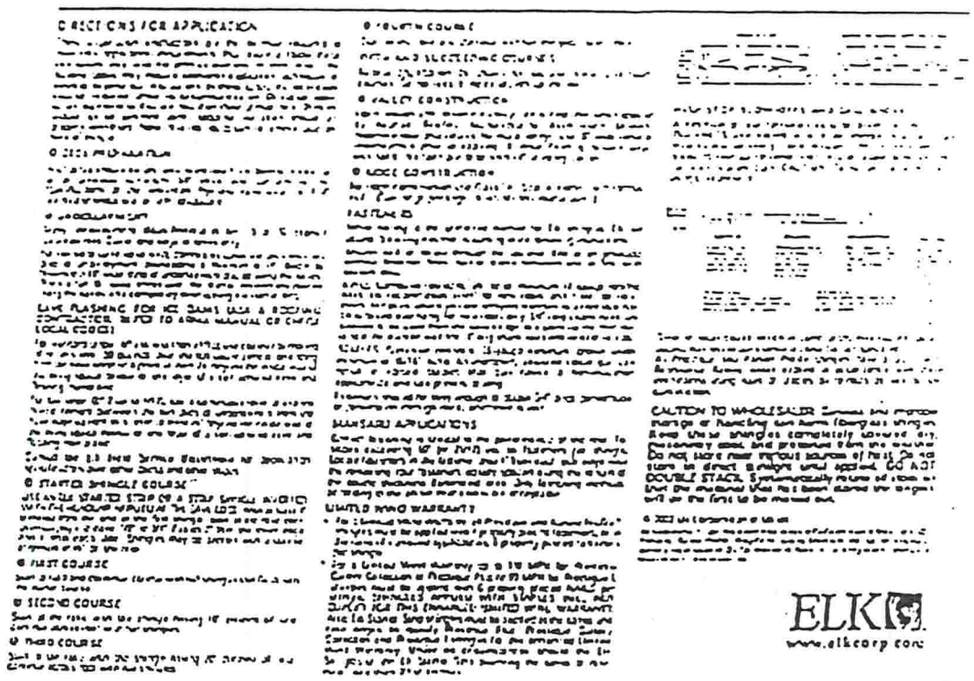

DIRECTIONS FOR APPLICATION

FIRST COURSE

SECOND COURSE

THIRD COURSE

FOURTH COURSE

FASTENERS

STANDARD APPLICATIONS

LIMITED WARRANTY

CAUTION TO WHOLESALER

ELK

www.elkcorp.com

ROOFING PRODUCTS SPECIFICATIONS - TUSCALOOSA, AL

PRESTIQUE®
HIGH DEFINITION®

RAISED PROFILE™

HIP AND RIDGE SHINGLES

As Prestique and Raised Profile shingles meet UL Wind Resistance (UL 997) and Class "A" Fire Ratings (UL 790), and ASTM Specifications D 3018, Type I, D 3161, Type I, E 108 and the requirements of ASTM D 3462

As Prestique and Raised Profile shingles meet the latest Building Code roofing wind requirements

SOUTHEAST & ATLANTIC OFFICE:
800.945.5551

CORPORATE HEADQUARTERS:
800.354.7732

PLANT LOCATION:
800.945.5545

ELK
www.elkcorp.com

GARAGE DOORS

REVISIONS			
LETTER	DESCRIPTION	DATE	APPROVAL
A	REV PER EN 10130	3/06/98	DL
B	REV PER EN 10141	3/13/98	DL
C	REV PER EN 10152	[illegible]	[illegible]

RUCTED WITH 5 OR MORE SECTIONS MUST BE
E/BRUS FOR THE ADDITIONAL INTERMEDIATE
ON THE THIRD SECTION.
L SECTIONS LESS THAN 20.812" MUST BE
THE ACTUAL SECTION HEIGHT & 20.812".
1 x 5/8" LONG TYPE AB HEX HEAD METAL SCREW
WIND WARNINGS ISSUED.

2.

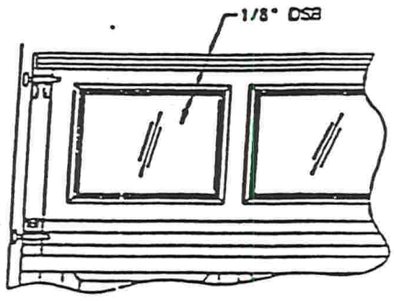

OPTIONAL WINDOW DETAIL
SCALE: 3/32

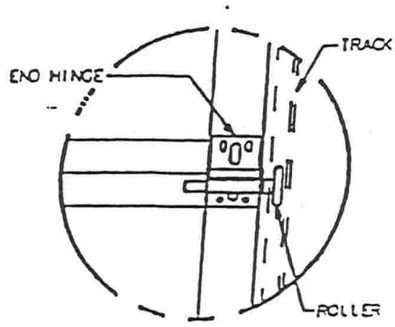

DETAIL "F"
SCALE: 1/4
(16" WIDE)

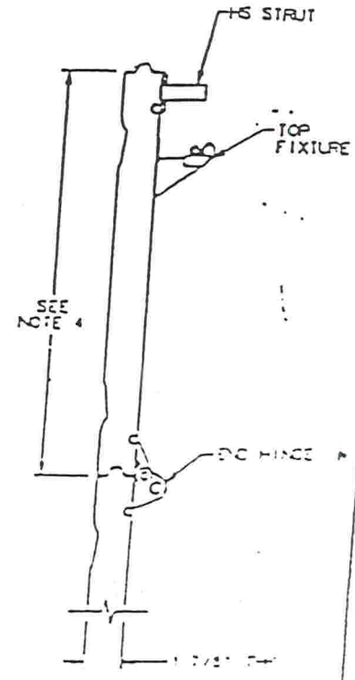

SECTION "A-A"
SCALE: 1/4

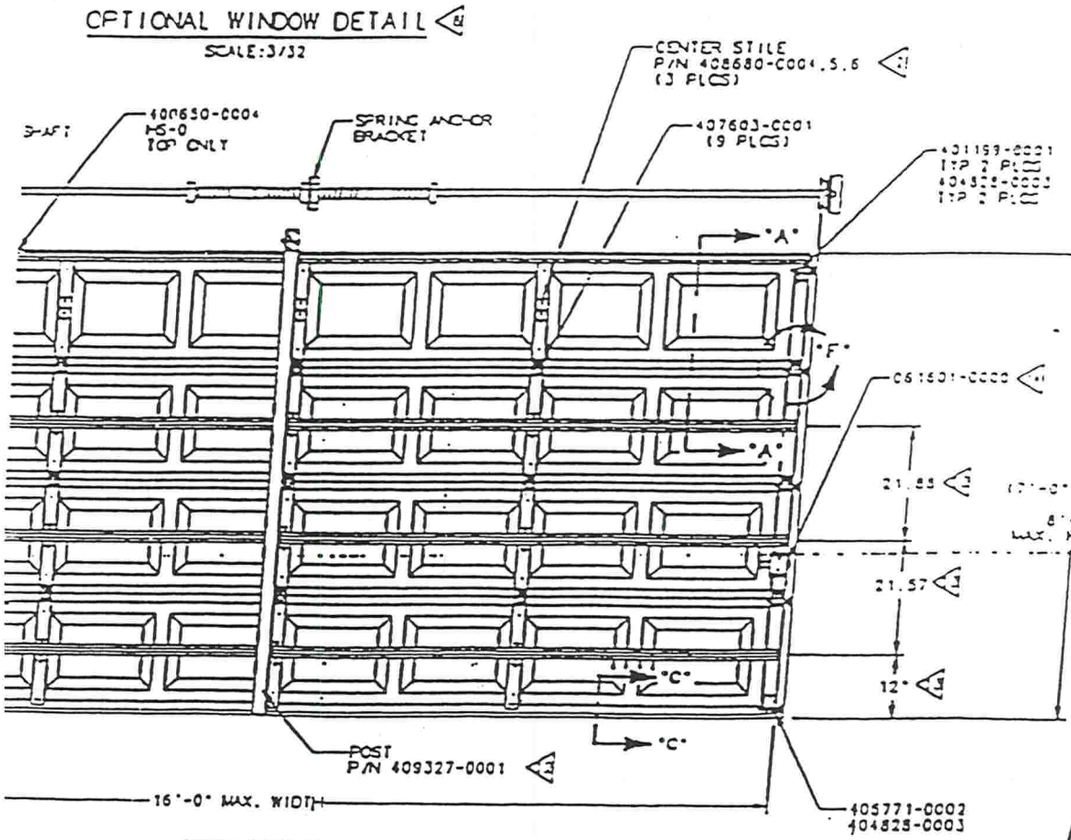

SCALE: 1/16"=1"
INTERIOR ELEVATION

DESIGN LOAD
25 PSF =
TEST LOAD
37.5 PSF =

10/01/01

M.TOLNIS	01/13/98	SERIES 250 & 180 RESI STL DR. 16'-0" MAX WIDTH, WIND LOAD	
DAVID FAX	02/19/98	D-409335	
DAVID FAX	02/19/98		

N/A

NONE | EACH

NOTES:

1. TESTED IN ACCORDANCE WITH STANDARD BUILDING CODE, CHAPTER 17, TO A POSITIVE AND NEGATIVE 37.5 PSF.
2. DASH NUMBERS REPRESENT VARIOUS SECTION HEIGHTS.
3. FOUR SECTION 7' HIGH DOOR SHOWN. 8' HIGH DOORS HAVE FIVE SECTIONS.
4. SECTION HEIGHT OF 20.812, 19.00 & 16.75 ARE AVAILABLE AND MAY BE USED IN COMBINATION TO ACHIEVE VARIOUS HEIGHT DOORS.
5. EMBOSSMENT PATTERN OF 14.50 X 20.375 SHOWN. ALTERNATE PATTERNS OF 12.50 X 43.375 AND 12.50 X 20.375 MAY BE USED.
6. TORSION SPRINGS SHOWN. EXTENSION SPRINGS AVAILABLE.
7. USE THIS BRACKET, REF. P/N 405964-0002, ON 8' HIGH DOORS ONLY.
8. WINDOW MAY BE INSTALLED IN THE TOP SECTION OR THE SECTION IMMEDIATELY BELOW THE TOP SECTION.
9. THE STRUT PLACEMENT ON D[illegible] CONSISTENT WITH THE DOOR SECTIONS ARE TO BE PLACED
10. THE STRUT PLACEMENT DIMEN[illegible] REDUCED BY THE DIFFERENCE
11. SCREW P/N 605911-0001 IS [illegible]
12. POST TO BE INSTALLED ONLY [illegible]
13. STRUT PLACEMENTS CAN VARY
14. QUANTITY FOR LOCKS CAN BE

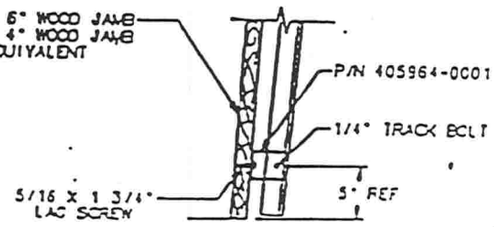

DETAIL "E"

SCALE: 1/3

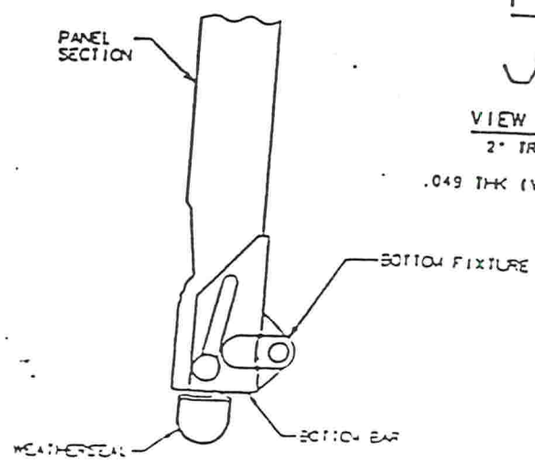

SECTION "C-C"

SCALE: 1/2

VIEW "D-

2" TRACK

.049 THK (VERTI

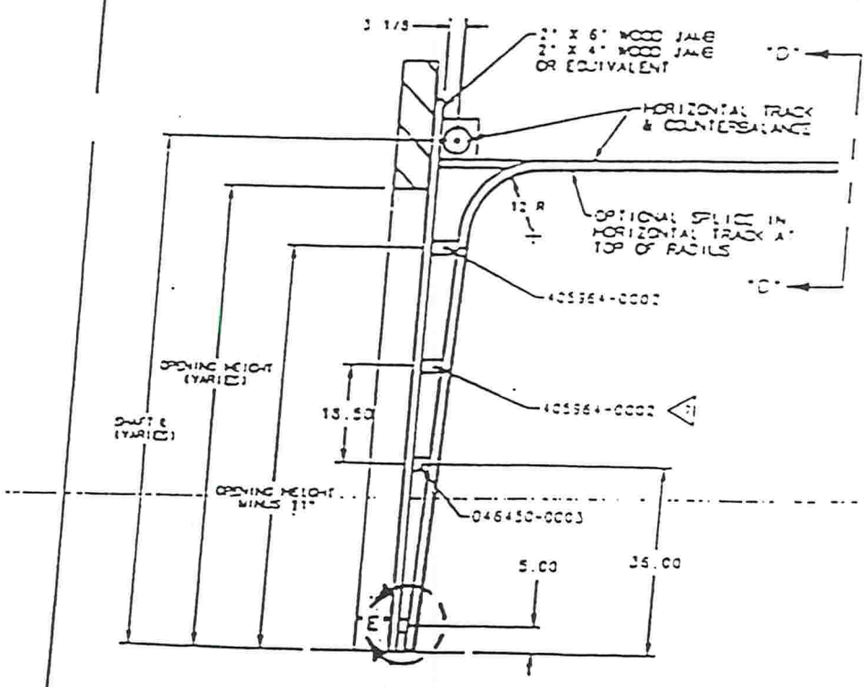

STANDARD TRACK DETAIL FOR 16'

SCALE: 1/16" = 1"

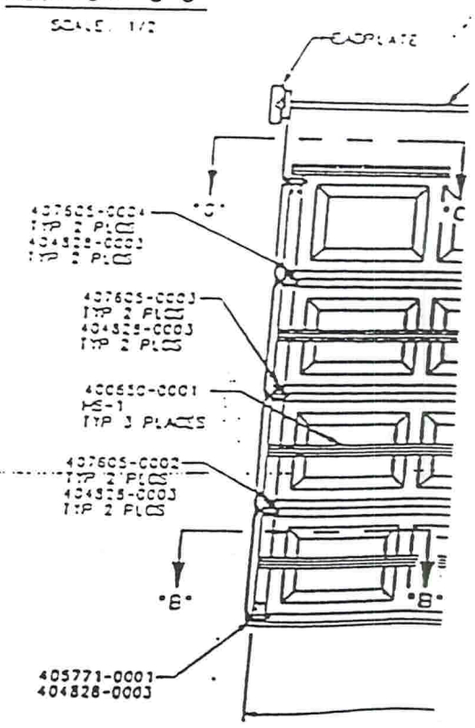

SERIES 280 THRU 289 ARE EQUIVALENT CONSTRUCTION 25GA STEEL
SERIES 180 ARE SAME CONSTRUCTION AS SERIES 280 ONLY 24GA STEEL AND END CAPS

DOOR TESTED WAS 281 SERIES.

DOOR WIDTH	CENTER STILE	END STILE	ROLLER SHAFT BRACKET	STRUTS/SECT.	ROLLER	VERTICAL TRACK GAGE	JAMB LOAD (# PER FT-HT)	HARDWARE
16'	3	SINGLE		HS1 HS0	2" X 7/16"	.049"	100	STD.

COLUMBIA COUNTY BUILDING DEPARTMENT

RESIDENTIAL MINIMUM PLAN REQUIREMENTS AND CHECKLIST FOR FLORIDA BUILDING CODE 2001
ONE (1) AND TWO (2) FAMILY DWELLINGS

ALL REQUIREMENTS ARE SUBJECT TO CHANGE

EFFECTIVE MARCH 1, 2002

ALL BUILDING PLANS MUST INDICATE THE FOLLOWING ITEMS AND INDICATE COMPLIANCE WITH CHAPTER 1606 OF THE FLORIDA BUILDING CODE 2001 BY PROVIDING CALCULATIONS AND DETAILS THAT HAVE THE SEAL AND SIGNATURE OF A CERTIFIED ARCHITECT OR ENGINEER REGISTERED IN THE STATE OF FLORIDA, OR ALTERNATE METHODOLOGIES, APPROVED BY THE STATE OF FLORIDA BUILDING COMMISSION FOR ONE-AND-TWO FAMILY DWELLINGS. FOR DESIGN PURPOSES THE FOLLOWING BASIC WIND SPEED AS PER FIGURE 1606 SHALL BE USED.

WIND SPEED LINE SHALL BE DEFINED AS FOLLOWS: THE CENTERLINE OF INTERSTATE 75.

1. ALL BUILDINGS CONSTRUCTED EAST OF SAID LINE SHALL BE -------- 100 MPH
2. ALL BUILDINGS CONSTRUCTED WEST OF SAID LINE SHALL BE --------110 MPH
3. NO AREA IN COLUMBIA COUNTY IS IN A WIND BORNE DEBRIS REGION

APPLICANT – PLEASE CHECK ALL APPLICABLE BOXES BEFORE SUBMITTAL

GENERAL REQUIREMENTS: Two (2) complete sets of plans containing the following:

Applicant	Plans Examiner	
☑	☐	All drawings must be clear, concise and drawn to scale ("Optional " details that are not used shall be marked void or crossed off). Square footage of different areas shall be shown on plans.
☑	☑	Designers name and signature on document (FBC 104.2.1). If licensed architect or engineer, official seal shall be affixed.
☑	☑	**Site Plan including:** a) Dimensions of lot b) Dimensions of building set backs c) Location of all other buildings on lot, well and septic tank if applicable, and all utility easements. d) Provide a full legal description of property.
☑	☐	**Wind-load Engineering Summary, calculations and any details required** a) Plans or specifications must state compliance with FBC Section 1606 b) The following information must be shown as per section 1606.1.7 FBC a. Basic wind speed (MPH) b. Wind importance factor (I) and building category c. Wind exposure – if more than one wind exposure is used, the wind exposure and applicable wind direction shall be indicated d. The applicable internal pressure coefficient e. Components and Cladding. The design wind pressure in terms of psf (kN/m²), to be used for the design of exterior component and cladding materials not specifally designed by the registered design professional
☑	☑	**Elevations including:**
☑	☑	a) All sides
☑	☑	b) Roof pitch
☑	☑	c) Overhang dimensions and detail with attic ventilation
☑	☑	d) Location, size and height above roof of chimneys
☑	☑	e) Location and size of skylights
☑	☑	f) Building height
☑	☑	e) Number of stories

Floor Plan including:

a) Rooms labeled and dimensioned

b) Shear walls

c) Windows and doors (including garage doors) showing size, mfg., approval listing and attachment specs. (FBC 1707) and safety glazing where needed (egress windows in bedrooms to be shown)

See note

d) Fireplaces (gas appliance) (vented or non-vented) or wood burning with hearth

e) Stairs with dimensions (width, tread and riser) and details of guardrails and handrails

f) Must show and identify accessibility requirements (accessible bathroom)

Foundation Plan including:

a) Location of all load-bearing wall with required footings indicated as standard Or monolithic and dimensions and reinforcing

b) All posts and/or column footing including size and reinforcing

c) Any special support required by soil analysis such as piling

d) Location of any vertical steel

Roof System:

a) Truss package including:

1. Truss layout and truss details signed and sealed by Fl. Pro. Eng.
2. Roof assembly (FBC 104.2.1 Roofing system, materials, manufacturer, fastening requirements and product evaluation with wind resistance rating)

b) Conventional Framing Layout including:

NA

1. Rafter size, species and spacing
2. Attachment to wall and uplift
3. Ridge beam sized and valley framing and support details
4. Roof assembly (FBC 104.2.1 Roofing systems, materials, manufacturer, fastening requirements and product evaluation with wind resistance rating)

Wall Sections including:

a) Masonry wall

NA

1. All materials making up wall
2. Block size and mortar type with size and spacing of reinforcement
3. Lintel, tie-beam sizes and reinforcement
4. Gable ends with rake beams showing reinforcement or gable truss and wall bracing details
5. All required connectors with uplift rating and required number and size of fasteners for continuous tie from roof to foundation
6. Roof assembly shown here or on roof system detail (FBC 104.2.1 Roofing system, materials, manufacturer, fastening requirements and product evaluation with resistance rating)
7. Fire resistant construction (if required)
8. Fireproofing requirements
9. Shoe type of termite treatment (termiticide or alternative method)
10. Slab on grade
    a. Vapor retarder (6mil. Polyethylene with joints lapped 6 inches and sealed)
    b. Must show control joints, synthetic fiber reinforcement or Welded fire fabric reinforcement and supports
11. Indicate where pressure treated wood will be placed
12. Provide insulation R value for the following:
    a. Attic space
    b. Exterior wall cavity
    c. Crawl space (if applicable)

b) Wood frame wall

1. All materials making up wall
2. Size and species of studs
3. Sheathing size, type and nailing schedule
4. Headers sized
5. Gable end showing balloon framing detail or gable truss and wall hinge bracing detail
6. All required fasteners for continuous tie from roof to foundation (truss anchors, straps, anchor bolts and washers)
7. Roof assembly shown here or on roof system detail (FBC104.2.1 Roofing system, materials, manufacturer, fastening requirements and product evaluation with wind resistance rating)
8. Fire resistant construction (if applicable)
9. Fireproofing requirements
10. Show type of termite treatment (termiticide or alternative method)
11. Slab on grade
    a. Vapor retarder (6Mil. Polyethylene with joints lapped 6 inches and sealed
    b. Must show control joints, synthetic fiber reinforcement or welded wire fabric reinforcement and supports
12. Indicate where pressure treated wood will be placed
13. Provide insulation R value for the following:
    a. Attic space
    b. Exterior wall cavity
    c. Crawl space (if applicable)

NA

~~c) Metal frame wall and roof (designed, signed and sealed by Florida Prof. Engineer or Architect)~~

Floor Framing System:

~~a) Floor truss package including layout and details, signed and sealed by Florida Registered Professional Engineer~~

~~b) Floor joist size and spacing~~

~~c) Girder size and spacing~~

NA

~~d) Attachment of joist to girder~~

~~e) Wind load requirements where applicable~~

Plumbing Fixture layout

Electrical layout including:

a) Switches, outlets/receptacles, lighting and all required GFCI outlets identified

b) Ceiling fans

c) Smoke detectors

d) Service panel and sub-panel size and location(s)

e) Meter location with type of service entrance (overhead or underground)

f) Appliances and HVAC equipment

g) Arc Fault Circuits (AFCI) in bedrooms

HVAC information

a) Manual J sizing equipment or equivalent computation

b) Exhaust fans in bathroom

Energy Calculations (dimensions shall match plans)

Gas System Type (LP or Natural) Location and BTU demand of equipment N/A

Disclosure Statement for Owner Builders

Notice Of Commencement

Private Potable Water — Private water system

a) Size of pump motor

b) Size of pressure tank

c) Cycle stop valve if used

MD

Rec. 35.50
Cert. Copy 5.50

Prepared by and after
recording return to:

William L. Joel
Stoneburner Berry & Simmons, P.A.
841 Prudential Drive, Suite 1400
Jacksonville, FL 32207

LOT 94
23914

Permit No. _____
Tax Folio No. _____

NOTICE OF COMMENCEMENT

STATE OF FLORIDA

COUNTY OF COLUMBIA

The undersigned hereby gives notice that improvements will be made to certain real property, and in accordance with section 713 Florida Statutes, the following information is provided in this notice of commencement.

1. Description of property (legal description and address, if available):

   See Exhibit "A" attached hereto.

2. General description of improvements: Construction of residential dwellings

3. Owner Information:

   (a) Name and Address: Cornerstone Developers, LLC a Florida limited liability company
   180 NW Amenity Court
   Lake City, Florida 32025

   (b) Owner's interest in the site of the improvements (if other than fee simple title holder):

   (c) Name and Address of fee simple title holder (if other than owner):

4. Contractor:

   Name and Address: Bryan Zecher Construction Inc.
   465 NW Orange Street
   Lake City, FL 32055

   (b) Phone No. 386-752-8653 Fax No. _____ (Optional, if service by fax is acceptable)

5. Surety on any payment bond: N/A

   (a) Name and Address:
   (b) Phone No. _____ Fax No. _____ (Optional, if service by fax is acceptable)

Inst:2006006013 Date:03/13/2006 Time:09:12
_____DC,P.DeWitt Cason,Columbia County B:1076 P:2473

STATE OF FLORIDA, COUNTY OF COLUMBIA
I HEREBY CERTIFY, that the above and foregoing is a true copy of the original filed in this office.
P. DeWITT CASON, CLERK OF COURTS
By Sharon Teagle
Deputy Clerk
Date 3-13-06

CLERK CIRCUIT COURT
COLUMBIA COUNTY, FLORIDA

(c) Amount of bond $_____

6. Lender making loan for the construction of the improvements:

(a) Name and Address: First Horizon Home Loan Corporation
1051 Deerwood Park Boulevard
Building 200, Suite 115
Jacksonville, FL 32256
Attn: James J. O'Connor, Jr.

(b) Phone No. 904-998-5300 Fax No. _____ (Optional, if service by fax is acceptable)

7. Persons within the State of Florida designated by owner upon whom notices may be served as provided by Section 713.13(1)(a)7, Florida Statutes:

(a) Name and Address: Cornerstone Developers, LLC a Florida limited liability company
180 NW Amenity Court
Lake City, Florida 32025

(b) Phone No. (386) 752-1711 Fax No. _____ (Optional, if service by fax is acceptable)

8. In addition to himself, Owner designates the following person to receive a copy of the lienor's notice as provided in Section 713.13(1)(b), Florida Statute:

(a) Name and Address: James J. O'Connor, Jr.
First Horizon Home Loan Corporation
1051 Deerwood Park Boulevard
Building 200, Suite 115
Jacksonville, FL 32256

(b) Phone No. 904-998-5300 Fax No. _____ (Optional, if service by fax is acceptable)

9. Expiration date of notice of commencement (the expiration date is one (1) year from the date of recording unless a different date is specified):

CORNERSTONE DEVELOPERS, LLC

By:_____
Frank Soucinek, its sole Manager

(SEAL)

(OWNER)

Inst:2006006013 Date:03/13/2006 Time:09:12
_____DC,P.DeWitt Cason,Columbia County B:1076 P:2474

Sworn to and Subscribed before me this 8th
day of March, 2006, by Frank Soucinek, the
Manager of Cornerstone Developers, LLC. He
is personally known or has produced _____
_____ as identification.

_____

Notary Public, State and County Aforesaid
Print Name:
My Commission Expires:
My Commission No.:

TERRY MCDAVID
MY COMMISSION # DD 500788
EXPIRES: January 16, 2010
Bonded Thru Notary Public Underwriters

(NOTARIAL SEAL)

POST A CERTIFIED COPY OF THE RECORDED NOTICE ON CONSTRUCTION SITE

Inst:2006006013 Date:03/13/2006 Time:09:12
_____DC,P.DeWitt Cason,Columbia County B:1076 P:2475

EXHIBIT A

Lot 94, Emerald Cove, Phase 1, according to the map or plat thereof as recorded in Plat Book 8, Page(s) 35 and 36, Public Records of Columbia County, Florida.

Inst:2006006013 Date:03/13/2006 Time:09:12
_____DC,P.DeWitt Cason,Columbia County B:1076 P:2476

CERTIFICATE OF OCCUPANCY

COLUMBIA COUNTY, FLORIDA

Department of Building and Zoning Inspection

This Certificate of Occupancy is issued to the below named permit holder for the building and premises at the below named location, and certifies that the work has been completed in accordance with the Columbia County Building Code.

Parcel Number 33-3S-16-02438-194 **Building permit No.** 000023914

Use Classification SFD,UTILITY **Fire:** 23.68

Permit Holder BRYAN ZECHER **Waste:** 49.00

Owner of Building CORNERSTONE DEVELOPERS **Total:** 72.68

Location: 196 SW TIMBERLAND COURT(EMERALD COVE,LOT 94)

Date: 06/23/2006

Harry Dicks by G

Building Inspector

POST IN A CONSPICUOUS PLACE
(Business Places Only)

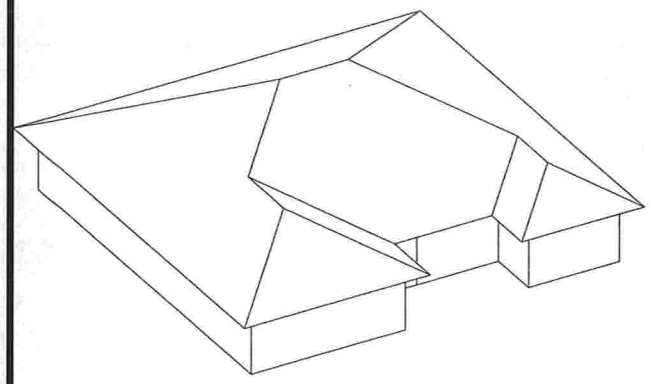

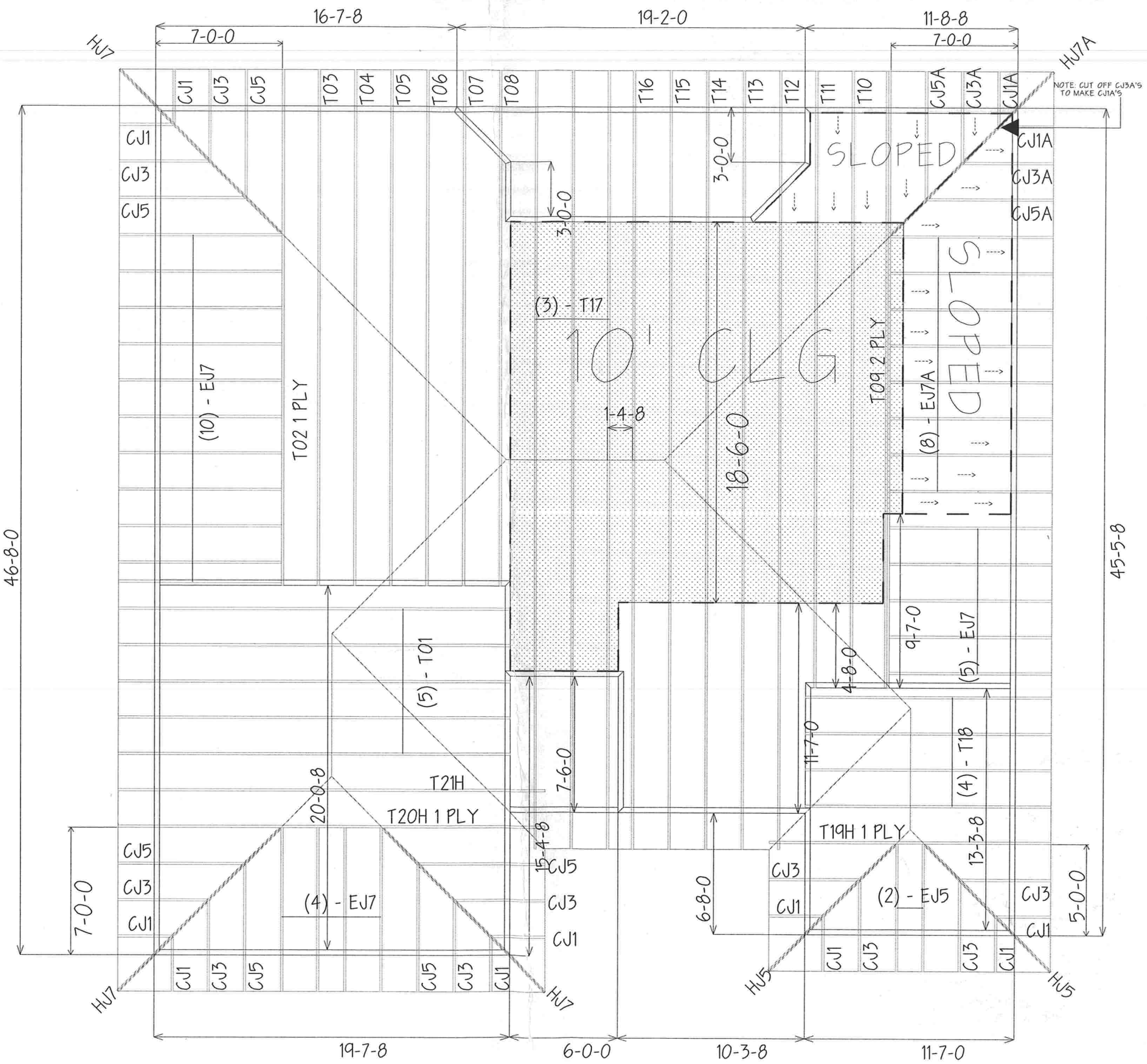

BEARING HEIGHT SCHEDUL

8'

2' O/H
6/12

NOTES:

1.) REFER TO HIB 91 (RECOMMENDATIONS FOR HANDLING INSTALLATION AND TEMPORARY BR REFER TO ENGINEERED DRAWINGS FOR PERMA BRACING REQUIRED.

2.) ALL TRUSSES (INCLUDING TRUSSES UNDER VALLEY FRAMING) MUST BE COMPLETELY DECKED OR REFER TO DETAIL V105 FOR ALTERNATE BRACING REQUIREMENTS.

3.) ALL VALLEYS ARE TO BE CONVENTIONALLY FRAMED BY BUILDER.

4.) ALL TRUSSES ARE DESIGNED FOR 2' o.c. MAXIMUM SPACING, UNLESS OTHERWISE NOTED

5.) ALL WALLS SHOWN ON PLACEMENT PLAN ARE CONSIDERED TO BE LOAD BEARING, UNLESS OTHERWISE NOTED.

6.) SY42 TRUSSES MUST BE INSTALLED WITH THE TOP BEING UP.

7.) ALL ROOF TRUSS HANGERS TO BE SIMPSON HU526 UNLESS OTHERWISE NOTED. ALL FLOOR TRUSS HANGERS TO BE SIMPSON THA422 UNLESS OTHERWISE NOTED.

8.) BEAM/HEADER/LINTEL (HDR) TO BE FURNISHED BY BUILDER.

SHOP DRAWING APPROVA

THIS LAYOUT IS THE SOLE SOURCE FOR FABRICATION TRUSSES AND VOIDS ALL PREVIOUS ARCHITECTURAL OR TRUSS LAYOUTS. REVIEW AND APPROVAL OF THIS LAYOU BE RECEIVED BEFORE ANY TRUSSES WILL BE BUILT. VERI CONDITIONS TO INSURE AGAINST CHANGES THAT WILL R IN EXTRA CHARGES TO YOU.

Requested Delivery Date : _____

Approved By: _____ Date: _____

Builders FirstSource
Bunnell
PHONE: 904-437-3349 FAX: 904-437-
Jacksonville
PHONE: 904-772-6100 FAX: 904-772-
Lake City
PHONE: 904-755-6894 FAX: 904-755-
Sanford
PHONE: 407-322-0059 FAX: 407-322-

BUILDER: BRYAN ZECHER

LEGAL ADDRESS: LOT 94 EMERALD CO

MODEL:	REVISION:
SAMUEL	SCALE: NT
DATE: 11-2-05	DRAWN BY: JRD
JOB #: L13828	

Notice of Treatment

11894

Applicator: Florida Pest Control & Chemical Co. (www.flapest .com)
Address: Bava Ave
City LC Phone 752.1703

Site Location: Subdivision Emerald Cove
Lot # 94 Block# Permit # 23914
Address 196 SW Timberland Cr

Product used	Active Ingredient	% Concentration
☐ Premise	Imidacloprid	0.1%
☐ Termidor	Fipronil	0.12%
☑ Bora-Care	Disodium Octaborate Tetrahydrate	23.0%

Type treatment: ☐ Soil ☑ Wood

Area Treated	Square feet	Linear feet	Gallons Applied
Dwelling	1974	604	6

As per Florida Building Code 104.2.6 – If soil chemical barrier method for termite prevention is used, final exterior treatment shall be completed prior to final building approval.

If this notice is for the final exterior treatment, initial this line _____.

4/27/06	1020	F254 Gunnw
Date	Time	Print Technician's Name

Remarks: _____

Applicator - White Permit File - Canary Permit Holder - Pink

10/05 ©