DATE 12/11/2008

Columbia County Building Permit

This Permit Must Be Prominently Posted on Premises During Construction

PERMIT
000027518

APPLICANT ROGER BONIFANT PHONE 321 689-2673

ADDRESS 6800 SOUTHPOINT PARKWAY JACKSONVILLE FL 32216

OWNER MARONDA HOMES PHONE 904 296-1490

ADDRESS 252 SW MULBERRY DRIVE LAKE CITY FL 32055

CONTRACTOR THEODORE BROCK PHONE 904 296-1490

LOCATION OF PROPERTY 90W, TL ON 247S, TR ON 252B, TL TIMBERRIDGE, TL MULBERRY, 5TH LOT ON RIGHT

TYPE DEVELOPMENT SFD,UTILITY ESTIMATED COST OF CONSTRUCTION 120300.00

HEATED FLOOR AREA 2024.00 TOTAL AREA 2406.00 HEIGHT 18.00 STORIES 1

FOUNDATION CONC WALLS FRAMED ROOF PITCH 6/12 FLOOR SLAB

LAND USE & ZONING RSF-2 MAX. HEIGHT 18

Minimum Set Back Requirments: STREET-FRONT 25.00 REAR 15.00 SIDE 10.00

NO. EX.D.U. 0 FLOOD ZONE X PP DEVELOPMENT PERMIT NO.

PARCEL ID 10-4S-16-02856-128 SUBDIVISION TIMBERLANDS

LOT 28 BLOCK PHASE UNIT TOTAL ACRES 0.50

000001693		CBC1256382		
Culvert Permit No.	Culvert Waiver	Contractor's License Number	Applicant/Owner/Contractor	
CULVERT	08-725	BK	WR	Y
Driveway Connection	Septic Tank Number	LU & Zoning checked by	Approved for Issuance	New Resident

COMMENTS: ELEVATION CONFIRMATION LETTER REQUIRED AT SLAB, MFE @ 91.0, NOC ON FILE

Check # or Cash 956757

FOR BUILDING & ZONING DEPARTMENT ONLY

Temporary Power _____ date/app. by Foundation _____ date/app. by Monolithic _____ date/app. by (footer/Slab)

Under slab rough-in plumbing _____ date/app. by Slab _____ date/app. by Sheathing/Nailing _____ date/app. by

Framing _____ date/app. by Rough-in plumbing above slab and below wood floor _____ date/app. by

Electrical rough-in _____ date/app. by Heat & Air Duct _____ date/app. by Peri. beam (Lintel) _____ date/app. by

Permanent power _____ date/app. by C.O. Final _____ date/app. by Culvert _____ date/app. by

M/H tie downs, blocking, electricity and plumbing _____ date/app. by Pool _____ date/app. by

Reconnection _____ date/app. by Pump pole _____ date/app. by Utility Pole _____ date/app. by

M/H Pole _____ date/app. by Travel Trailer _____ date/app. by Re-roof _____ date/app. by

BUILDING PERMIT FEE $ 605.00 CERTIFICATION FEE $ 12.03 SURCHARGE FEE $ 12.03

MISC. FEES $ 0.00 ZONING CERT. FEE $ 50.00 FIRE FEE $ 0.00 WASTE FEE $

FLOOD DEVELOPMENT FEE $ FLOOD ZONE FEE $ 25.00 CULVERT FEE $ 25.00 **TOTAL FEE** 729.06

INSPECTORS OFFICE CLERKS OFFICE CH

NOTICE: IN ADDITION TO THE REQUIREMENTS OF THIS PERMIT, THERE MAY BE ADDITIONAL RESTRICTIONS APPLICABLE TO THIS PROPERTY THAT MAY BE FOUND IN THE PUBLIC RECORDS OF THIS COUNTY. AND THERE MAY BE ADDITIONAL PERMITS REQUIRED FROM OTHER GOVERNMENTAL ENTITIES SUCH AS WATER MANAGEMENT DISTRICTS, STATE AGENCIES, OR FEDERAL AGENCIES.

"WARNING TO OWNER: YOUR FAILURE TO RECORD A NOTICE OF COMMENCEMENT MAY RESULT IN YOUR PAYING TWICE FOR IMPROVEMENTS TO YOUR PROPERTY. IF YOU INTEND TO OBTAIN FINANCING, CONSULT WITH YOUR LENDER OR AN ATTORNEY BEFORE RECORDING YOUR NOTICE OF COMMENCEMENT."

EVERY PERMIT ISSUED SHALL BECOME INVALID UNLESS THE WORK AUTHORIZED BY SUCH PERMIT IS COMMENCED WITHIN 180 DAYS AFTER ITS ISSUANCE, OR IF THE WORK AUTHORIZED BY SUCH PERMIT IS SUSPENDED OR ABANDONED FOR A PERIOD OF 180 DAYS AFTER THE TIME THE WORK IS COMMENCED. A VALID PERMIT RECIEVES AN APPROVED INSPECTION EVERY 180 DAYS. WORK SHALL BE CONSIDERED TO BE IN ACTIVE PROGESS WHEN THE PERMIT HAS RECIEVED AN APPROVED INSPECTION WITHIN 180 DAYS.

The Issuance of this Permit Does Not Waive Compliance by Permittee with Deed Restrictions.

Columbia County Building Permit Application

For Office Use Only Application # 0811-37 Date Received 11/25/08 By CP Permit # 1693/27518

Zoning Official BLK Date 03-12-08 Flood Zone X Plat Land Use Res. Low Dev Zoning RSF-2

FEMA Map # N/A Elevation N/A MFE 91.0 ft per plat River N/A Plans Examiner WR Date 12-2-08

Comments Elevation Confirmation Letter required at slab

☐ NOC ☑ EH ☑ Deed or PA ☑ Site Plan ☐ State Road Info ☐ Parent Parcel #

☐ Dev Permit # ☐ In Floodway ☐ Letter of Auth. from Contractor ☐ F W Comp. letter

IMPACT FEES: EMS $29.88 Fire $78.83 Corr 409.16 Road/Code $1,046.00/210

School $1,500.00 = TOTAL $3,063.67

Septic Permit No. Fax (904) 332-6375

Name Authorized Person Signing Permit Theodore Brock / Patrick Wilson Phone (904) 296-1490

Address 6800 Southpoint Pkwy #300 Jacksonville, FL 32216

Owners Name Maronda Homes Inc. of Florida Phone (904) 296-1490

911 Address 252 SW Mulberry Drive Lake City, FL 32055

Contractors Name Theodore C. Brock Phone (904) 296-1490

Address 6800 Southpoint Pkwy #300 Jacksonville, FL 32216

Fee Simple Owner Name & Address N/A

Bonding Co. Name & Address N/A

Architect/Engineer Name & Address Tomas Ponce 4005 Maronda Way Sanford, FL 32771

Mortgage Lenders Name & Address Bank of America 250 Park Ave. S. #400 Winter Park, FL 32789

Circle the correct power company – FL Power & Light – (Clay Elec.) – Suwannee Valley Elec. – Progress Energy

Property ID Number 10-4S-16-02850-128 Estimated Cost of Construction $91,890.00

Subdivision Name Timberlands Lot 24 Block ____ Unit ____ Phase ____

Driving Directions Hwy 90, left on 247 South; Right on 252B; left on Timber Ridge
LEFT
To MULBERRY Dr. 5th HOUSE ON RIGHT

Number of Existing Dwellings on Property 0

Construction of Residential Single Family Dwelling Total Acreage .50 Lot Size 21,000

Do you need a - Culvert Permit or Culvert Waiver or Have an Existing Drive Total Building Height 18'

Actual Distance of Structure from Property Lines - Front 32 Side 48 Side 28 Rear 75.3

Number of Stories 1 Heated Floor Area 2024 Total Floor Area 2406 Roof Pitch 6/12

Application is hereby made to obtain a permit to do work and installations as indicated. I certify that no work or installation has commenced prior to the issuance of a permit and that all work be performed to meet the standards of all laws regulating construction in this jurisdiction.

Sent email 12/2/08 $729.06

Inst:200812022526 Date:12/16/2008 Time:2:29 PM
DC,P.DeWitt Cason,Columbia County Page 1 of 1 B:1163 P:2601

NOTICE OF COMMENCEMENT

County Clerk's Office Stamp or Seal

Tax Parcel Identification Number 10-45-16-02856-128

THE UNDERSIGNED hereby gives notice that improvements will be made to certain real property, and in accordance with Section 713.13 of the Florida Statutes, the following information is provided in this **NOTICE OF COMMENCEMENT.**

1. Description of property *(legal description)*:
   a) Street *(job)* Address: 252 SW MULBERRY DRIVE LAKE CITY FL 32024
2. General description of improvements: Construction of a single family dwelling
3. Owner Information
   a) Name and address: Maronda Homes Inc of Fl 10800 Southpoint Pkwy #300 Jax Fl 32216
   b) Name and address of fee simple titleholder (if other than owner)
   c) Interest in property owner
4. Contractor Information
   a) Name and address: Maronda Homes Inc of Fl 10800 Southpoint Pkwy #300 Jax Fl 32216
   b) Telephone No.: (904) 296-1490 Fax No. (Opt.) (904) 332-1035
5. Surety Information
   a) Name and address:
   b) Amount of Bond:
   c) Telephone No.: Fax No. (Opt.)
6. Lender
   a) Name and address:
   b) Phone No.
7. Identity of person within the State of Florida designated by owner upon whom notices or other documents may be served:
   a) Name and address: Steel City Title Inc. 851 Trafalgar Ct #132S Maitland, Fl 32751
   b) Telephone No.: 407-6100-4422 Fax No. (Opt.) 407-6100-4708
8. In addition to himself, owner designates the following person to receive a copy of the Lienor's Notice as provided in Section 713.13(l)(b), Florida Statutes:
   a) Name and address:
   b) Telephone No.: Fax No. (Opt.)
9. Expiration date of Notice of Commencement **(the expiration date is one year from the date of recording unless a different date is specified):**

WARNING TO OWNER: ANY PAYMENTS MADE BY THE OWNER AFTER THE EXPIRATION OF THE NOTICE OF COMMENCEMENT ARE CONSIDERED IMPROPER PAYMENTS UNDER CHAPTER 713, PART I, SECTION 713.13, FLORIDA STATUTES, AND CAN RESULT IN YOUR PAYING TWICE FOR IMPROVEMENTS TO YOUR PROPERTY; A NOTICE OF COMMENCEMENT MUST BE RECORDED AND POSTED ON THE JOB SITE BEFORE THE FIRST INSPECTION. IF YOU INTEND TO OBTAIN FINANCING, CONSULT YOUR LENDER OR AN ATTORNEY BEFORE COMMENCING WORK OR RECORDING YOUR NOTICE OF COMMENCEMENT.

STATE OF FLORIDA
COUNTY OF COLUMBIA

10. Signature of Owner or Owner's Authorized Office/Director/Partner/Manager

Steve Hogg

Print Name STEVE HOGG

The foregoing instrument was acknowledged before me, a Florida Notary, this 12 day of DECEMBER, 20 08, by: STEVE HOGG as DIVISION MANAGER (type of authority, e.g. officer, trustee, attorney fact) for MARONDA HOMES INC OF FLORIDA (name of party on behalf of whom instrument was executed).

Personally Known X OR Produced Identification Type

Notary Signature Nancy P. O'Leary Notary Stamp or Seal:

NANCY P. O'LEARY

Notary Public State of Florida
Nancy P O'Leary
My Commission DD529330
Expires 03/15/2010

—AND—

11. Verification pursuant to Section 92.525, Florida Statutes. Under penalties of perjury, I declare that I have read the foregoing and that the facts stated in it are true to the best of my knowledge and belief.

Nancy P. O'Leary
NANCY P. O'LEARY

Notary Public State of Florida
Nancy P O'Leary
My Commission DD529330
Expires 03/15/2010

Signature of Natural Person Signing (in line #10 above.) STEVE HOGG

Columbia County Building Permit Application

TIME LIMITATIONS OF APPLICATION : An application for a permit for any proposed work shall be deemed to have been abandoned 180 days after the date of filing, unless such application has been pursued in good faith or a permit has been issued; except that the building official is authorized to grant one or more extensions of time for additional periods not exceeding 90 days each. The extension shall be requested in writing and justifiable cause demonstrated.

FLORIDA'S CONSTRUCTION LIEN LAW: Protect Yourself and Your Investment
According to Florida Law, those who work on your property or provide materials, and are not paid-in-full, have a right to enforce their claim for payment against your property. This claim is known as a construction lien. If your contractor fails to pay subcontractors or material suppliers or neglects to make other legally required payments, the people who are owed money may look to your property for payment, even if you have paid your contractor in full. This means if a lien is filed against your property, it could be sold against your will to pay for labor, materials or other services which your contractor may have failed to pay.

NOTICE OF RESPONSIBILITY TO BUILDING PERMITEE:
YOU ARE HEREBY NOTIFIED as the recipient of a building permit from Columbia County, Florida, you will be held responsible to the County for any damage to sidewalks and/or road curbs and gutters, concrete features and structures, together with damage to drainage facilities, removal of sod, major changes to lot grades that result in ponding of water, or other damage to roadway and other public infrastructure facilities caused by you or your contractor, subcontractors, agents or representatives in the construction and/or improvement of the building and lot for which this permit is issued. No certificate of occupancy will be issued until all corrective work to these public infrastructures and facilities has been corrected.

WARNING TO OWNER: YOUR FAILURE TO RECORD A NOTICE OF COMMENCMENT MAY RESULT IN YOU PAYING TWICE FOR IMPROVEMENTS TO YOUR PROPERTY. A NOTICE OF COMMENCEMENT MUST BE RECORDED AND POSTED ON THE JOB SITE BEFORE THE FIRST INSPECTION. IF YOU INTEND TO OBTAIN FINANCING, CONSULT WITH YOUR LENDER OR ATTORNEY BEFORE RECORDING YOUR NOTICE OF COMMENCEMENT.

OWNERS CERTIFICATION: I hereby certify that all the foregoing information is accurate and all work will be done in compliance with all applicable laws and regulating construction and zoning. I further understand the above written responsibilities in Columbia County for obtaining this Building Permit.

Owners Signature Steve Mogg

CONTRACTORS AFFIDAVIT: By my signature I understand and agree that I have informed and provided this written statement to the owner of all the above written responsibilities in Columbia County for obtaining this Building Permit.

Contractor's Signature (Permitee) Theodore C. Brock

Contractor's License Number CBC1256382
Columbia County Competency Card Number _____

Affirmed under penalty of perjury to by the Contractor and subscribed before me this 26 **day of** September **20** 08.
Personally known X **or Produced Identification** _____

Melissa L McKague
State of Florida Notary Signature (For the Contractor) Melissa L McKague

SEAL: NOTARY PUBLIC STATE OF FLORIDA — Notary Public State of Florida, Melissa L McKague, My Commission DD493647, Expires 11/22/2009

550319-802-491
S/B/C 11-19

08-0725

STATE OF FLORIDA
DEPARTMENT OF HEALTH
ONSITE SEWAGE DISPOSAL SYSTEM
APPLICATION FOR CONSTRUCTION PERMIT

PERMIT NO. 902093
DATE PAID: 9-25-08
FEE PAID: 1114.08
RECEIPT #: 1079780

APPLICATION FOR:
[X] New System [ ] Existing System [ ] Holding Tank [ ] Innovative
[ ] Repair [ ] Abandonment [ ] Temporary [ ]

APPLICANT: Maronda Homes Inc of Florida

AGENT: Melissa McGaghe TELEPHONE: (904)-296-1490 ext 1

MAILING ADDRESS: 10800 Southpoint Pkwy # 300 Jacksonville, FL 32216

==========

TO BE COMPLETED BY APPLICANT OR APPLICANT'S AUTHORIZED AGENT. SYSTEMS MUST BE CONSTRUCTED BY A PERSON LICENSED PURSUANT TO 489.105(3)(m) OR 489.552, FLORIDA STATUTES.

==========

PROPERTY INFORMATION

LOT: 28 BLOCK: 1 SUBDIVISION: Timberlands PLATTED: Yes

PROPERTY ID #: 10-4S-16-02856-128 ZONING: SFR I/M OR EQUIVALENT: [Y / N]

PROPERY SIZE: 150 ACRES WATER SUPPLY: [ ] PRIVATE PUBLIC [X]<=2000GPD [ ]>2000GPD

IS SEWER AVAILABLE AS PER 381.0065, FS? [Y / (N)] DISTANCE TO SEWER: Ø FT

PROPERTY ADDRESS: 757 SW Mulberry Dr.

DIRECTIONS TO PROPERTY: US 90 West, left on 247, right on CR252B, left on SW Timber Ridge Drive, left on SW Mulberry Drive, 5th Lot on Right.

BUILDING INFORMATION [X] RESIDENTIAL [ ] COMMERCIAL

Unit No	Type of Establishment	No. of Bedrooms	Building Area Sqft	Commercial/Institutional System Design Table 1, Chapter 64E-6, FAC
1	SFR	3	2406	400 GPD
2	11-20-08 - Roger called lot cleared & Ready for inspection.			
3				
4				

[ ] Floor/Equipment Drains [ ] Other (Specify)

SIGNATURE: Melissa McGaghe DATE: 09/29/08

STATE OF FLORIDA
DEPARTMENT OF HEALTH

APPLICATION FOR ONSITE SEWAGE DISPOSAL SYSTEM CONSTRUCTION PERMIT

Permit Application Number 08-0725

PART II - SITE PLAN

Scale: Each block represents 5 feet and 1 inch = 50 feet.

See Attached
Site Plan

Notes:

Site Plan submitted by: Signature

Agent
Title

Plan Approved ✓ Not Approved ____ Date 11-20-08

By [illegible] Columbia County Health Department

ALL CHANGES MUST BE APPROVED BY THE COUNTY HEALTH DEPARTMENT

08-072

PROPOSED BUILDING LAYOUT

IN SECTION 10, TOWNSHIP 4 SOUTH, RANGE 16 EAST, COLUMBIA COUNTY, FLORIDA

30 0 30 60 90

1" = 30'

LEGAL DESCRIPTION:

LOT TWENTY-EIGHT (28) OF "TIMBERLANDS" AS PER PLAT THEREOF, AS RECORDED IN PLAT BOOK '9', PAGE 27 OF THE PUBLIC RECORDS OF COLUMBIA COUNTY, FLORIDA.

CERTIFIED TO:

1) MARONDA HOMES

BUILDING SETBACK NOTE:

BUILDING SETBACK INFORMATION FOR "TIMBERLANDS" IS AS FOLLOWS: FRONT 25', REAR 15', SIDE 10'

BENCHMARK NOTE:

ELEVATIONS SHOWN HEREON ARE BASED UPON A BENCHMARK SET IN A 8" PINE AT THE FRONT OF LOT 2, WITH AN ELEVATION OF 98.76'. THIS INFORMATION WAS PROVIDED TO THIS SURVEYOR BY BRITT SURVEYING (PLATTING SURVEYOR) DATUM UNKNOWN.

Appvl 11-20-08

SURVEYOR NOTES:

1) TO THE BEST OF MY KNOWLEDGE, THERE ARE NO ENCROACHMENTS, BOUNDARY LINE DISPUTES, EASEMENTS, OR CLAIMS OF EASEMENTS, OTHER THAN ARE DEPICTED ON THIS DRAWING.
2) ALL UTILITIES AND OR IMPROVEMENTS, IF ANY, MAY NOT BE SHOWN ON THIS DRAWING.
3) IN THE OPINION OF THIS SURVEYOR THE BOUNDARY SHOWN HEREON BEST REPRESENTS THE LOCATION OF THE SUBJECT PROPERTY IN RELATION TO THE DESCRIPTION AND THOSE PROPERTY CORNERS FOUND TO BE ACCEPTABLE TO THIS SURVEYOR.
4) BUILDING SETBACK LINES DEPICTED HEREON ARE SHOWN AS PER THE RECORD PLAT, BUT ARE SUBJECT TO CHANGE. PRIOR TO ANY NEW CONSTRUCTION, THE APPROPRIATE GOVERNING AUTHORITY SHOULD BE CONTACTED FOR THE CURRENT SETBACK REQUIREMENTS.
5) THIS MAP OF SURVEY REFLECTS CONDITIONS LOCATED AS OF THE DATE OF FIELD WORK COMPLETION (SEE TITLE BLOCK).
6) AREAS OF ENVIRONMENTAL CONCERN HAVE NOT BEEN LOCATED BY THIS SURVEYOR, UNLESS OTHERWISE DEPICTED HEREON.

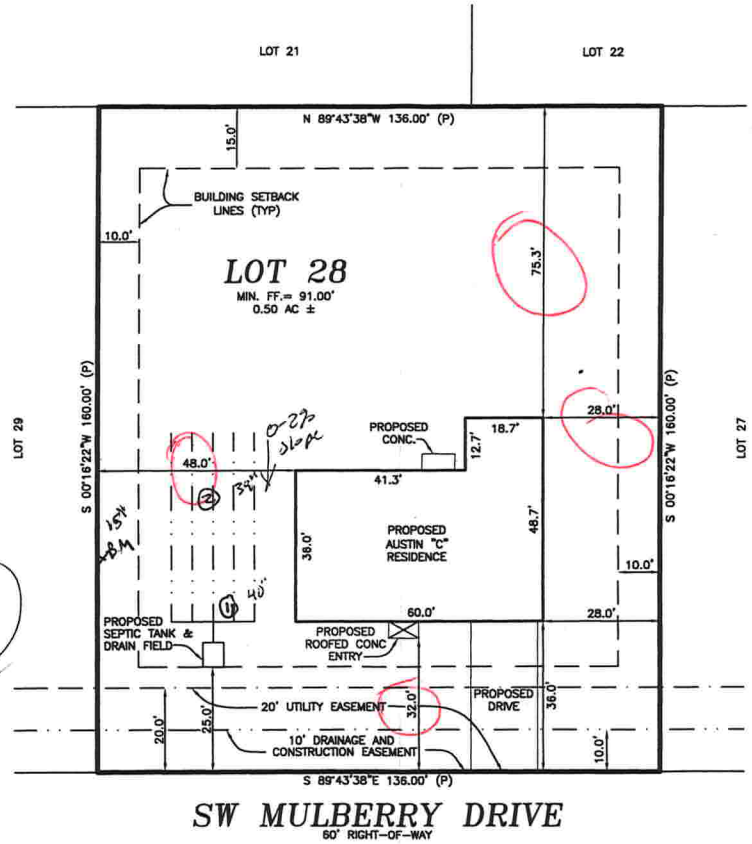

SW MULBERRY DRIVE
60' RIGHT-OF-WAY

LEGEND:

- ● = FOUND 1/2" REBAR NO IDENTIFICATION
- ⊙ = FOUND 1/2" REBAR & CAP L.B. 6894
- ○ = SET 1/2" REBAR & CAP L.B. 6894
- ⊕ = FOUND 3/4" IRON PIPE
- ■ = FOUND 4" X 4" CONC. MON. NO IDENTIFICATION
- □ = SET 4" X 4" CONC. MON. P.S.M. 5582
- ✕ = SET NAIL & DISK P.S.M. 5582
- ✕ = FOUND NAIL & DISK
- ⊠ = FOUND 6" X 6" S.R.D. R/W MON.
- ⊟ = CATV RISER
- ⊠ = TELEPHONE PEDESTAL
- ⊘ = WOOD POWER POLE

ABBREVIATIONS:

A/C = AIR CONDITIONER
ASPH = ASPHALT
C = CALCULATED FROM MEASURED
CATV = CABLE TELEVISION
C/B = CONCRETE BLOCK
CLF = CHAIN LINK FENCE
CM = CONCRETE MONUMENT
CONC = CONCRETE
ELEC = ELECTRIC
ELEV = ELEVATION
FND = FOUND
FNC = FENCE
LB = LICENSED SURVEYOR BUSINESS
(M) = FIELD MEASURED
MH = MANHOLE
O.U. = OVERHEAD UTILITIES
P = PLAT
PB = PLAT BOOK
P.U.E. = PUBLIC UTILITIES EASEMENT
TRANS = TRANSFORMER
TYP = TYPICAL
WM = WATER METER
WV = WATER VALVE

THIS IS NOT A BOUNDARY SURVEY

CERTIFICATE OF SURVEYOR:

NOT VALID WITHOUT THE SIGNATURE AND THE ORIGINAL RAISED SEAL OF A FLORIDA LICENSED SURVEYOR AND MAPPER. ADDITIONS OR DELETIONS TO THIS MAP BY ANYONE OTHER THAN THIS SURVEYOR IS PROHIBITED.

I HEREBY CERTIFY THAT THE SURVEY DATA SHOWN HEREON, IS A TRUE AND CORRECT REPRESENTATION OF A SURVEY PERFORMED UNDER MY SUPERVISION OF THE HEREON DESCRIBED PROPERTY, AND IT MEETS THE MINIMUM TECHNICAL STANDARDS AS SET FORTH BY THE FLORIDA BOARD OF LAND SURVEYORS, PURSUANT TO SECTION 472.027, FLORIDA STATUTES, AND CHAPTER 61G17-6, FLORIDA ADMINISTRATIVE CODE.

BY: [signature]
JAMES E. BRINKMAN, PSM - FLA. CERT# 5582
DATE: 11/13/08

FLOOD NOTE:

IN THE OPINION OF THIS SURVEYOR, ACCORDING TO THE NATIONAL FLOOD INSURANCE PROGRAM, FLOOD INSURANCE RATE MAP COMMUNITY PANEL NO. 120070-0175-B, DATED 1-6-88, THIS PROPERTY IS IN FLOOD ZONE "X" WHICH IS AN AREA DETERMINED TO BE OUTSIDE 500-YEAR FLOOD PLAIN, AS SCALED FROM SAID MAP. INFORMATION FROM THE FEDERAL EMERGENCY MANAGEMENT AGENCY (FEMA) FLOOD INSURANCE RATE MAPS, SHOWN ON THIS MAP, WAS CURRENT AS OF THE REFERENCED DATE. MAP REVISIONS AND AMENDMENTS ARE PERIODICALLY MADE BY LETTER AND MAY NOT BE REFLECTED ON THE MOST CURRENT MAP.

TITLE NOTE:

THIS SURVEY IS SUBJECT TO ANY FACTS THAT MAY BE DISCLOSED BY A FULL AND ACCURATE TITLE SEARCH. THIS SURVEYOR HAS NOT PERFORMED A SEARCH OF THE PUBLIC RECORDS ON THIS PARCEL FOR ANY CLAIMS OF TITLE, EASEMENTS, OR RESTRICTIONS THAT MAY EFFECT THIS PARCEL. THE PRESENCE OR ABSENCE OF ANY SUCH CLAIMS ARE NOT CERTIFIED HEREON.

BRINKMAN SURVEYING & MAPPING INC.
4607 NW 6th STREET SUITE C, GAINESVILLE, FL. 32609
PHONE: (352) 374-7707 FAX: (352) 374-8757

SCALE: 1" = 30'	"THE BENCHMARK IN QUALITY SERVICE"	DRAWN BY: ZL
DATE: 11/11/2008		CHECKED BY: J.B.
THIS IS NOT A BOUNDARY SURVEY		
PREPARED FOR: MARONDA		DRAWING NUMBER 199-08

This Instrument Prepared by and Return to :
Amy Wesp
SOUTHERN TITLE HOLDING COMPANY, LLC.
3943 BAY MEADOWS ROAD
JACKSONVILLE, Florida 32217
as a necessary incident to the fulfillment of conditions contained in a title insurance commitment issued by it.

Property Appraisers Parcel I.D. (Folio) Number(s):
R02856-000
Grantee(s) I.D..#(s):
File No:**JX0812085**

Inst:200812010775 Date:6/6/2008 Time:1:05 PM
Doc Stamp-Deed:6293.00
DC,P.DeWitt Cason,Columbia County Page 1 of 1 B:1151 P:2385

WARRANTY DEED
(CORPORATION)

This Warranty Deed Made this **27th day of May, 2008**, by **RML HOLDINGS INC., A FLORIDA CORPORATION**, and having its place of business at **703 NW BLACKBERRY CIRCLE, LAKE CITY, Florida 32055**, hereinafter called the grantor,

to **MARONDA HOMES, INC. OF FLORIDA , A FLORIDA CORPORATION,** whose post office address is: **11200 ST. JOHNS INDUSTRIAL PARKWAY, JACKSONVILLE, FLORIDA 32246**, hereinafter called the grantee,

WITNESSETH: That said grantor, for and in consideration of the sum of ~~$10.00~~ $899,000.00 Dollars and other valuable considerations, receipt whereof is hereby acknowledged, by these presents grants, bargains, sells, aliens, remises, releases, conveys and confirms unto the grantee, all that certain land situate in **Columbia** County, Florida, viz:
LOTS 1, 9, 10, 11, 12, 13, 14, 15, 16, 17, 18, 19, 20, 24, 27, 28, 29, 30, 31, 32, 33, 34, 35, 36, 37, 38, 39, 40, AND 41, OF TIMBERLANDS, PHASE 1, ACCORDING TO PLAT THEREOF AS RECORDED IN PLAT BOOK 9, PAGE 26 AND 27 OF THE PUBLIC RECORDS OF COLUMBIA COUNTY, FLORIDA.

TOGETHER with all the tenements, hereditaments and appurtenances thereto belonging or in anywise appertaining.
To Have and to Hold, the same in fee simple forever.
And the grantor hereby covenants with said grantee that the grantor is lawfully seized of said land in fee simple; that the grantor has good right and lawful authority to sell and convey said land; that the grantor hereby fully warrants the title to said land and will defend the same against the lawful claims of all persons whomsoever; and that said land is free of all encumbrances, except taxes accruing subsequent to December 31, 2007, reservations, restrictions and easements of record, if any.
(Wherever used herein the terms "grantor" and "grantee" included all the parties to this instrument, and the heirs, legal representatives and assigns of individuals, and the successors and assigns of corporation.)
In Witness Whereof, the Grantor has caused these presents to be executed in its name, and its corporate seal to be hereunto affixed, by its proper officers thereunto duly authorized, the day and year first above written.

Signed, sealed and delivered in our presence:

ATTEST: _____
Secretary

RML HOLDINGS INC.

Witness Signature: Worth D. Morris
Printed Name: WORTH D. MORRIS

BY: _____
ROBERT R. LARDIZABAL, PRESIDENT

Witness Signature: Jodyn M. Gable. AVP
Printed Name: Jody M. Gable

STATE OF **FLORIDA**
COUNTY OF **DUVAL**

The foregoing instrument was acknowledged before me this 28th day of May, 2008, by **ROBERT R. LARDIZABAL** as **PRESIDENT** of **RML HOLDINGS INC., A FLORIDA CORPORATION**, on behalf of the corporation. He/she is personally known to me or who has produced driver license(s) as identification.

My Commission Expires:

Worth D. Morris
Printed Name: WORTH D. MORRIS
Notary Public
Serial Number

WORTH D. MORRIS
Notary Public - State of Florida
My Commission Expires Jun 16, 2011
Commission # DD 664420

FORM 600A-2004R

EnergyGauge® 4.5

FLORIDA ENERGY EFFICIENCY CODE FOR BUILDING CONSTRUCTION

Florida Department of Community Affairs

Residential Whole Building Performance Method A 28/1 TM

Project Name:	AUSTIN 3 BDR LAKE CITY	Builder:	MARONDA HOMES
Address:	252 SW MULBERRY DR.	Permitting Office:	COLUMBIA
City, State:	LAKE CITY 32024	Permit Number:	27518
Owner:	ELECTRIC	Jurisdiction Number:	221000
Climate Zone:	North		

1. New construction or existing	New	
2. Single family or multi-family	Single family	
3. Number of units, if multi-family	1	
4. Number of Bedrooms	3	
5. Is this a worst case?	Yes	
6. Conditioned floor area (ft²)	2024 ft²	
7. Glass type[1] and area: (Label reqd. by 13-104.4.5 if not default)		
a. U-factor: (or Single or Double DEFAULT)	Description Area 7a (Sngle Default) 177.0 ft²	
b. SHGC: (or Clear or Tint DEFAULT)	7b. (Clear) 177.0 ft²	
8. Floor types		
a. Slab-On-Grade Edge Insulation	R=0.0, 219.0(p) ft	
b. N/A		
c. N/A		
9. Wall types		
a. Concrete, Int Insul, Exterior	R=4.1, 1199.0 ft²	
b. Frame, Steel, Adjacent	R=13.0, 320.0 ft²	
c. N/A		
d. N/A		
e. N/A		
10. Ceiling types		
a. Under Attic	R=19.0, 2251.0 ft²	
b. N/A		
c. N/A		
11. Ducts		
a. Sup: Unc. Ret: Con. AH(Sealed):Interior	Sup. R=6.0, 200.0 ft	
b. N/A		

12. Cooling systems		
a. Central Unit	Cap: 40.5 kBtu/hr SEER: 13.00	
b. N/A		
c. N/A		
13. Heating systems		
a. Electric Heat Pump	Cap: 40.5 kBtu/hr HSPF: 8.10	
b. N/A		
c. N/A		
14. Hot water systems		
a. Electric Resistance	Cap: 50.0 gallons EF: 0.90	
b. N/A		
c. Conservation credits (HR-Heat recovery, Solar DHP-Dedicated heat pump)		
15. HVAC credits (CF-Ceiling fan, CV-Cross ventilation, HF-Whole house fan, PT-Programmable Thermostat, MZ-C-Multizone cooling, MZ-H-Multizone heating)	PT,	

Glass/Floor Area: 0.09

Total as-built points: 25380

Total base points: 26250

PASS

I hereby certify that the plans and specifications covered by this calculation are in compliance with the Florida Energy Code.

PREPARED BY: _____

DATE: Wayne Campbell

I hereby certify that this building, as designed, is in compliance with the Florida Energy Code.

OWNER/AGENT: Melissa McCague

DATE: Melissa McCague 9/25/08

Review of the plans and specifications covered by this calculation indicates compliance with the Florida Energy Code. Before construction is completed this building will be inspected for compliance with Section 553.908 Florida Statutes.

GREAT SEAL OF THE STATE OF FLORIDA — IN GOD WE TRUST

BUILDING OFFICIAL: _____

DATE: _____

1 Predominant glass type. For actual glass type and areas, see Summer & Winter Glass output on pages 2&4.

SUMMER CALCULATIONS

Residential Whole Building Performance Method A - Details

ADDRESS: , , , PERMIT #:

BASE

GLASS TYPES

.18 X Conditioned Floor Area	X BSPM	= Points
.18 2024.0	18.59	6773.0

WALL TYPES	Area	X BSPM	= Points
Adjacent	320.0	0.70	224.0
Exterior	1199.0	1.70	2038.3
Base Total:	**1519.0**		**2262.3**

DOOR TYPES	Area	X BSPM	= Points
Adjacent	18.0	2.40	43.2
Exterior	20.0	6.10	122.0
Base Total:	**38.0**		**165.2**

CEILING TYPES	Area	X BSPM	= Points
Under Attic	2024.0	1.73	3501.5
Base Total:	**2024.0**		**3501.5**

FLOOR TYPES	Area	X BSPM	= Points
Slab	219.0(p)	-37.0	-8103.0
Raised	0.0	0.00	0.0
Base Total:			**-8103.0**

INFILTRATION	Area	X BSPM	= Points
	2024.0	10.21	20665.0

AS-BUILT

Type/SC	Overhang Ornt	Len	Hgt	Area	X SPM	X SOF	= Points
1.Single, Clear	W	1.0	6.0	16.0	43.84	0.97	680.0
2.Single, Clear	N	1.0	6.0	16.0	21.73	0.97	338.0
3.Single, Clear	W	1.0	3.0	5.0	43.84	0.85	186.0
4.Single, Clear	W	1.0	7.0	30.0	43.84	0.98	1294.0
5.Single, Clear	W	1.0	8.0	40.0	43.84	0.99	1734.0
6.Single, Clear	E	1.0	6.0	20.0	47.92	0.97	927.0
7.Single, Clear	E	1.0	6.0	20.0	47.92	0.97	927.0
8.Single, Clear	E	1.0	6.0	30.0	47.92	0.97	1394.0
As-Built Total:				**177.0**			**7480.0**

Type	R-Value	Area	X SPM	= Points
1. Concrete, Int Insul, Exterior	4.1	1199.0	1.13	1360.9
2. Frame, Steel, Adjacent	13.0	320.0	0.90	288.0
As-Built Total:		**1519.0**		**1648.9**

Type	Area	X SPM	= Points
1.Exterior Insulated	20.0	4.10	82.0
2.Adjacent Wood	18.0	2.40	43.2
As-Built Total:	**38.0**		**125.2**

Type	R-Value	Area	X SPM X SCM	= Points
1. Under Attic	19.0	2251.0	2.34 X 1.00	5267.3
As-Built Total:		**2251.0**		**5267.3**

Type	R-Value	Area	X SPM	= Points
1. Slab-On-Grade Edge Insulation	0.0	219.0(p	-41.20	-9022.8
As-Built Total:		**219.0**		**-9022.8**

	Area	X SPM	= Points
	2024.0	10.21	20665.0

SUMMER CALCULATIONS

Residential Whole Building Performance Method A - Details

ADDRESS: , , ,	PERMIT #:

BASE				AS-BUILT							
Summer Base Points: 25264.1				**Summer As-Built Points:**							**26163.6**
Total Summer Points	X System Multiplier	=	Cooling Points	Total Component (System - Points)	X Cap Ratio	X Duct Multiplier (DM x DSM x AHU)	X System Multiplier	X Credit Multiplier	=	Cooling Points	
				(sys 1: Central Unit 40500btuh ,SEER/EFF(13.0) Ducts:Unc(S),Con(R),Int(AH),R6.0(INS)							
				26164	1.00	(1.08 x 1.147 x 0.86)	0.260	0.950		6927.1	
25264.1	**0.3250**		**8210.8**	**26163.6**	**1.00**	**1.072**	**0.260**	**0.950**		**6927.1**	

WINTER CALCULATIONS

Residential Whole Building Performance Method A - Details

ADDRESS: , , , PERMIT #:

BASE				AS-BUILT							
GLASS TYPES .18 X Conditioned Floor Area	X BWPM	= Points		Type/SC	Overhang Ornt	Len	Hgt	Area X	WPM X	WOF	= Points
.18	2024.0	20.17	7348.0	1.Single, Clear	W	1.0	6.0	16.0	28.84	1.01	465.0
				2.Single, Clear	N	1.0	6.0	16.0	33.22	1.00	531.0
				3.Single, Clear	W	1.0	3.0	5.0	28.84	1.04	150.0
				4.Single, Clear	W	1.0	7.0	30.0	28.84	1.00	869.0
				5.Single, Clear	W	1.0	8.0	40.0	28.84	1.00	1157.0
				6.Single, Clear	E	1.0	6.0	20.0	26.41	1.02	536.0
				7.Single, Clear	E	1.0	6.0	20.0	26.41	1.02	536.0
				8.Single, Clear	E	1.0	6.0	30.0	26.41	1.02	804.0
				As-Built Total:				**177.0**			**5048.0**

WALL TYPES	Area X	BWPM	= Points	Type	R-Value	Area X	WPM	= Points
Adjacent	320.0	3.60	1152.0	1. Concrete, Int Insul, Exterior	4.1	1199.0	6.42	7697.6
Exterior	1199.0	3.70	4436.3	2. Frame, Steel, Adjacent	13.0	320.0	4.90	1568.0
Base Total:	**1519.0**		**5588.3**	**As-Built Total:**		**1519.0**		**9265.6**

DOOR TYPES	Area X	BWPM	= Points	Type	Area X	WPM	= Points
Adjacent	18.0	11.50	207.0	1.Exterior Insulated	20.0	8.40	168.0
Exterior	20.0	12.30	246.0	2.Adjacent Wood	18.0	11.50	207.0
Base Total:	**38.0**		**453.0**	**As-Built Total:**	**38.0**		**375.0**

CEILING TYPES	Area X	BWPM	= Points	Type	R-Value	Area X	WPM X WCM	= Points
Under Attic	2024.0	2.05	4149.2	1. Under Attic	19.0	2251.0	2.70 X 1.00	6077.7
Base Total:	**2024.0**		**4149.2**	**As-Built Total:**		**2251.0**		**6077.7**

FLOOR TYPES	Area X	BWPM	= Points	Type	R-Value	Area X	WPM	= Points
Slab	219.0(p)	8.9	1949.1	1. Slab-On-Grade Edge Insulation	0.0	219.0(p	18.80	4117.2
Raised	0.0	0.00	0.0					
Base Total:			**1949.1**	**As-Built Total:**		**219.0**		**4117.2**

INFILTRATION	Area X	BWPM	= Points	Area X	WPM	= Points
	2024.0	-0.59	-1194.2	2024.0	-0.59	-1194.2

WINTER CALCULATIONS

Residential Whole Building Performance Method A - Details

ADDRESS: , , ,	PERMIT #:

BASE				AS-BUILT							
Winter Base Points:			**18293.4**	**Winter As-Built Points:**							**23689.3**
Total Winter Points	X	System Multiplier	= Heating Points	Total Component (System - Points)	X	Cap Ratio	X Duct Multiplier (DM x DSM x AHU)	X System Multiplier	X Credit Multiplier	=	Heating Points
				(sys 1: Electric Heat Pump 40500 btuh ,EFF(8.1) Ducts:Unc(S),Con(R),Int(AH),R6.0							
				23689.3		1.000	(1.060 x 1.169 x 0.88)	0.421	0.950		10372.2
18293.4		**0.5540**	**10134.6**	**23689.3**		**1.00**	**1.095**	**0.421**	**0.950**		**10372.2**

WATER HEATING & CODE COMPLIANCE STATUS

Residential Whole Building Performance Method A - Details

ADDRESS: , , , PERMIT #:

BASE				AS-BUILT							
WATER HEATING											
Number of Bedrooms	X	Multiplier	= Total	Tank Volume	EF	Number of Bedrooms	X	Tank Ratio	X Multiplier	X Credit Multiplier	= Total
3		2635.00	7905.0	50.0	0.90	3		1.00	2693.56	1.00	8080.7
				As-Built Total:							**8080.7**

CODE COMPLIANCE STATUS

BASE				AS-BUILT			
Cooling Points +	Heating Points +	Hot Water Points =	Total Points	Cooling Points +	Heating Points +	Hot Water Points =	Total Points
8211	**10135**	**7905**	**26250**	**6927**	**10372**	**8081**	**25380**

PASS

Code Compliance Checklist

Residential Whole Building Performance Method A - Details

ADDRESS: , , , PERMIT #:

6A-21 INFILTRATION REDUCTION COMPLIANCE CHECKLIST

COMPONENTS	SECTION	REQUIREMENTS FOR EACH PRACTICE	CHECK
Exterior Windows & Doors	606.1.ABC.1.1	Maximum:.3 cfm/sq.ft. window area; .5 cfm/sq.ft. door area.	✓
Exterior & Adjacent Walls	606.1.ABC.1.2.1	Caulk, gasket, weatherstrip or seal between: windows/doors & frames, surrounding wall; foundation & wall sole or sill plate; joints between exterior wall panels at corners; utility penetrations; between wall panels & top/bottom plates; between walls and floor. EXCEPTION: Frame walls where a continuous infiltration barrier is installed that extends from, and is sealed to, the foundation to the top plate.	✓
Floors	606.1.ABC.1.2.2	Penetrations/openings >1/8" sealed unless backed by truss or joint members. EXCEPTION: Frame floors where a continuous infiltration barrier is installed that is sealed to the perimeter, penetrations and seams.	✓
Ceilings	606.1.ABC.1.2.3	Between walls & ceilings; penetrations of ceiling plane of top floor; around shafts, chases, soffits, chimneys, cabinets sealed to continuous air barrier; gaps in gyp board & top plate; attic access. EXCEPTION: Frame ceilings where a continuous infiltration barrier is installed that is sealed at the perimeter, at penetrations and seams.	✓
Recessed Lighting Fixtures	606.1.ABC.1.2.4	Type IC rated with no penetrations, sealed; or Type IC or non-IC rated, installed inside a sealed box with 1/2" clearance & 3" from insulation; or Type IC rated with < 2.0 cfm from conditioned space, tested.	✓
Multi-story Houses	606.1.ABC.1.2.5	Air barrier on perimeter of floor cavity between floors.	✓
Additional Infiltration reqts	606.1.ABC.1.3	Exhaust fans vented to outdoors, dampers; combustion space heaters comply with NFPA, have combustion air.	✓

6A-22 OTHER PRESCRIPTIVE MEASURES (must be met or exceeded by all residences.)

COMPONENTS	SECTION	REQUIREMENTS	CHECK
Water Heaters	612.1	Comply with efficiency requirements in Table 612.1.ABC.3.2. Switch or clearly marked cir breaker (electric) or cutoff (gas) must be provided. External or built-in heat trap required.	✓
Swimming Pools & Spas	612.1	Spas & heated pools must have covers (except solar heated). Non-commercial pools must have a pump timer. Gas spa & pool heaters must have a minimum thermal efficiency of 78%.	
Shower heads	612.1	Water flow must be restricted to no more than 2.5 gallons per minute at 80 PSIG.	✓
Air Distribution Systems	610.1	All ducts, fittings, mechanical equipment and plenum chambers shall be mechanically attached, sealed, insulated, and installed in accordance with the criteria of Section 610. Ducts in unconditioned attics: R-6 min. insulation.	✓
HVAC Controls	607.1	Separate readily accessible manual or automatic thermostat for each system.	✓
Insulation	604.1, 602.1	Ceilings-Min. R-19. Common walls-Frame R-11 or CBS R-3 both sides. Common ceiling & floors R-11.	✓

ENERGY PERFORMANCE LEVEL (EPL) DISPLAY CARD

ESTIMATED ENERGY PERFORMANCE SCORE* = 85.6

The higher the score, the more efficient the home.

ELECTRIC, , , ,

1.	New construction or existing	New	
2.	Single family or multi-family	Single family	
3.	Number of units, if multi-family	1	
4.	Number of Bedrooms	3	
5.	Is this a worst case?	Yes	
6.	Conditioned floor area (ft²)	2024 ft²	
7.	Glass type[1] and area: (Label reqd. by 13-104.4.5 if not default)		
a.	U-factor: (or Single or Double DEFAULT)	Description Area 7a (Sngle Default) 177.0 ft²	
b.	SHGC: (or Clear or Tint DEFAULT)	7b. (Clear) 177.0 ft²	
8.	Floor types		
a.	Slab-On-Grade Edge Insulation	R=0.0, 219.0(p) ft	
b.	N/A		
c.	N/A		
9.	Wall types		
a.	Concrete, Int Insul, Exterior	R=4.1, 1199.0 ft²	
b.	Frame, Steel, Adjacent	R=13.0, 320.0 ft²	
c.	N/A		
d.	N/A		
e.	N/A		
10.	Ceiling types		
a.	Under Attic	R=19.0, 2251.0 ft²	
b.	N/A		
c.	N/A		
11.	Ducts		
a.	Sup: Unc. Ret: Con. AH(Sealed):Interior	Sup. R=6.0, 200.0 ft	
b.	N/A		

12.	Cooling systems		
a.	Central Unit	Cap: 40.5 kBtu/hr SEER: 13.00	
b.	N/A		
c.	N/A		
13.	Heating systems		
a.	Electric Heat Pump	Cap: 40.5 kBtu/hr HSPF: 8.10	
b.	N/A		
c.	N/A		
14.	Hot water systems		
a.	Electric Resistance	Cap: 50.0 gallons EF: 0.90	
b.	N/A		
c.	Conservation credits (HR-Heat recovery, Solar DHP-Dedicated heat pump)		
15.	HVAC credits (CF-Ceiling fan, CV-Cross ventilation, HF-Whole house fan, PT-Programmable Thermostat, MZ-C-Multizone cooling, MZ-H-Multizone heating)	PT,	

I certify that this home has complied with the Florida Energy Efficiency Code For Building Construction through the above energy saving features which will be installed (or exceeded) in this home before final inspection. Otherwise, a new EPL Display Card will be completed based on installed Code compliant features.

Builder Signature: _____ Date: 9/25/08

Address of New Home: 252 SW Mulberry Drive City/FL Zip: Lake City, FL 32024

**NOTE: The home's estimated energy performance score is only available through the FLA/RES computer program. This is not a Building Energy Rating. If your score is 80 or greater (or 86 for a US EPA/DOE EnergyStar™ designation), your home may qualify for energy efficiency mortgage (EEM) incentives if you obtain a Florida Energy Gauge Rating. Contact the Energy Gauge Hotline at 321/638-1492 or see the Energy Gauge web site at www.fsec.ucf.edu for information and a list of certified Raters. For information about Florida's Energy Efficiency Code For Building Construction, contact the Department of Community Affairs at 850/487-1824.*

1 Predominant glass type. For actual glass type and areas, see Summer & Winter Glass output on pages 2&4.

Project Summary
Entire House
MARONDA HOMES

Job: AUSTIN 3 BDR
Date:
By: G. CARMACK

4005 MARONDA WAY, SANFORD, FL 32771 Phone: (407) 321-0064

Project Information

For: AUSTIN 3BDR

Notes:

Design Information

Weather: St Augustine, FL, US

Winter Design Conditions

Outside db	35	°F
Inside db	70	°F
Design TD	35	°F

Summer Design Conditions

Outside db	89	°F
Inside db	75	°F
Design TD	14	°F
Daily range	M	
Relative humidity	50	%
Moisture difference	63	gr/lb

Heating Summary

Structure	30120	Btuh
Ducts	4184	Btuh
Central vent (0 cfm)	***0***	Btuh
Humidification	0	Btuh
Piping	0	Btuh
Equipment load	34304	Btuh

Sensible Cooling Equipment Load Sizing

Structure	23078	Btuh
Ducts	8946	Btuh
Central vent (0 cfm)	***0***	Btuh
Blower	0	Btuh
Use manufacturer's data	n	
Rate/swing multiplier	0.94	
Equipment sensible load	30103	Btuh

Infiltration

Method	Simplified
Construction quality	Average
Fireplaces	0

	Heating	Cooling
Area (ft²)	2024	2024
Volume (ft³)	16192	16192
Air changes/hour	0.32	0.16
Equiv. AVF (cfm)	86	43

Latent Cooling Equipment Load Sizing

Structure	3052	Btuh
Ducts	2591	Btuh
Central vent (0 cfm)	0	Btuh
Equipment latent load	5643	Btuh
Equipment total load	35746	Btuh
Req. total capacity at 0.77 SHR	3.3	ton

Heating Equipment Summary

Make	TEMPSTAR
Trade	HEAT PUMP
Model	N2H342AKA

Efficiency	7.9	HSPF
Heating input		
Heating output	0	Btuh @ 47°F
Temperature rise	0	°F
Actual air flow	***0***	cfm
Air flow factor	0.000	cfm/Btuh
Static pressure	0.60	in H2O
Space thermostat		

Cooling Equipment Summary

Make	TEMPSTAR
Trade	HEAT PUMP
Cond	N2H342AKA
Coil	FEM2X4200

Efficiency	13	SEER
Sensible cooling	32725	Btuh
Latent cooling	9775	Btuh
Total cooling	42500	Btuh
Actual air flow	***1270***	cfm
Air flow factor	0.040	cfm/Btuh
Static pressure	0.60	in H2O
Load sensible heat ratio	0.85	

Bold/italic values have been manually overridden

Printout certified by ACCA to meet all requirements of Manual J 8th Ed.

Building Analysis
Entire House
MARONDA HOMES

Job: AUSTIN 3 BDR
Date:
By: G. CARMACK

4005 MARONDA WAY, SANFORD, FL 32771 Phone: (407) 321-0064

Project Information

For: AUSTIN 3BDR

Design Conditions

Location:
St Augustine, FL, US
Elevation: 20 ft
Latitude: 30°N

Outdoor:	**Heating**	**Cooling**
Dry bulb (°F)	35	89
Daily range (°F)	-	16 (M)
Wet bulb (°F)	-	78
Wind speed (mph)	15.0	7.5

Indoor:	**Heating**	**Cooling**
Indoor temperature (°F)	70	75
Design TD (°F)	35	14
Relative humidity (%)	30	50
Moisture difference (gr/lb)	8.8	63.1

Infiltration:

Method	Simplified
Construction quality	Average
Fireplaces	0

Heating

Component	Btuh/ft²	Btuh	% of load
Walls	4.2	6774	19.7
Glazing	44.5	5867	17.1
Doors	0.0	0	0.0
Ceilings	1.7	3747	10.9
Floors	10.6	10409	30.3
Infiltration	1.9	3322	9.7
Ducts		4184	12.2
Piping		0	0.0
Humidification		0	0.0
Ventilation		0	0.0
Adjustments		0	
Total		**34304**	**100.0**

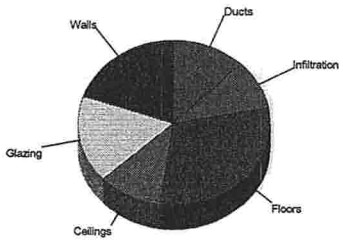

Cooling

Component	Btuh/ft²	Btuh	% of load
Walls	2.1	3428	10.7
Glazing	64.7	8546	26.7
Doors	0.0	0	0.0
Ceilings	2.5	5460	17.1
Floors	0.0	0	0.0
Infiltration	0.4	664	2.1
Ducts		8946	27.9
Ventilation		0	0.0
Internal gains		4980	15.6
Blower		0	0.0
Adjustments		0	
Total		**32025**	**100.0**

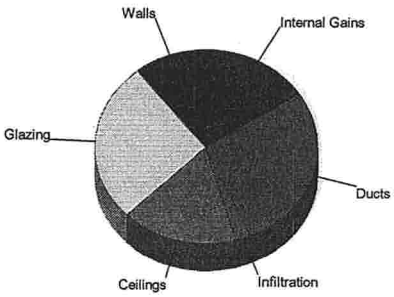

Overall U-value = 0.156 Btuh/ft²-°F

Data entries checked.

UNANIMOUS WRITTEN CONSENT
0F THE BOARD OF DIRECTORS
OF
MARONDA HOMES, INC. OF FLORIDA

The undersigned, constituting the entire Board of Directors of Maronda Homes, Inc. of Florida (the "Corporation") and waiving all requirements of notice, consents to the corporate actions specified below and adopts the following resolutions by written consent, without a meeting, pursuant to the Florida Business Corporation Act:

RESOLVED, that the following persons be and are hereby authorized, empowered, and designated to enter into agreements to buy and sell individual lots and houses to individual purchasers, to execute deeds to effectuate the buying or selling of individual lots, and to enter into short-term leases not to exceed two (2) years for such individual houses.

I FURTHER CERTIFY, that the following persons hold the following offices with the Corporation:

William J. Wolf	C.E.O.
Wayne Von Dreele	President
Ronald W. Wolf	Vice President
Ronald W. Wolf	Treasurer
Ronald W. Wolf	Secretary
Scott C. Howard	Vice President
Thomas Greenawalt	Vice President
William Rousch	Vice President
P. Thomas Prior	Vice President
Richard A. Brown	Vice President
Steven R. Hogg	Vice President
Dominick Donato	Vice President
Peter Chun	Vice President
George Friedman	Vice President
Mark Bowes	Vice President
Gregg S. Carlson	Vice President
Chad Johannesen	Vice President
William Berryhill	Vice President
John P. Mills	Vice President
John Williams	Vice President

IN WITNESS WHEREOF, the undersigned has executed this consent effective as of the 16th day of January 2008.

William J. Wolf

William J. Wolf, Director

Ronald W. Wolf

Ronald W. Wolf, Director

Columbia County Building Department
Culvert Permit

Culvert Permit No.
000001693

DATE 12/11/2008 PARCEL ID # 10-4S-16-02856-128

APPLICANT ROGER BONIFANT PHONE 321 689-2673

ADDRESS 6800 SOUTHPOINT PARKWAY JACKSONVILLE FL 32216

OWNER MARONDA HOMES PHONE 904 296-1490

ADDRESS 252 SW MULBERRY DRIVE LAKE CITY FL 32055

CONTRACTOR THEODORE BROCK PHONE 904 296-1490

LOCATION OF PROPERTY 90W, TL ON 247S, TR ON 252B, TL TIMBERRIDGE, TL

MULBERRY DR, 5TH ON RIGHT

SUBDIVISION/LOT/BLOCK/PHASE/UNIT TIMBERLANDS 28

SIGNATURE X

INSTALLATION REQUIREMENTS

[X] Culvert size will be 18 inches in diameter with a total lenght of 32 feet, leaving 24 feet of driving surface. Both ends will be mitered 4 foot with a 4 : 1 slope and poured with a 4 inch thick reinforced concrete slab.

INSTALLATION NOTE: Turnouts will be required as follows:
a) a majority of the current and existing driveway turnouts are paved, or;
b) the driveway to be served will be paved or formed with concrete.
Turnouts shall be concrete or paved a minimum of 12 feet wide or the width of the concrete or paved driveway, whichever is greater. The width shall conform to the current and existing paved or concreted turnouts.

[ ] Culvert installation shall conform to the approved site plan standards.

[ ] Department of Transportation Permit installation approved standards.

[ ] Other

ALL PROPER SAFETY REQUIREMENTS SHOULD BE FOLLOWED DURING THE INSTALATION OF THE CULVERT.

135 NE Hernando Ave., Suite B-21
Lake City, FL 32055
Phone: 386-758-1008 Fax: 386-758-2160

Amount Paid 25.00

COLUMBIA COUNTY BUILDING DEPARTMENT
RESIDENTIAL MINIMUM PLAN REQUIREMENTS AND CHECKLIST
FOR THE FLORIDA RESIDENTIAL BUILDING CODE 2004 with 2005 & 2006
Supplements and One (1) and Two (2) Family Dwellings

ALL REQUIREMENTS ARE SUBJECT TO CHANGE

ALL BUILDING PLANS MUST INDICATE COMPLIANCE with the Current FLORIDA BUILDING CODES and the Current FLORIDA RESIDENTIAL CODE. ALL PLANS OR DRAWING SHALL PROVIDED CALCULATIONS AND DETAILS THAT HAVE THE SEAL AND SIGNATURE OF A CERTIFIED ARCHITECT OR ENGINEER REGISTERED IN THE STATE OF FLORIDA, OR ALTERNATE METHODOLOGIES, APPROVED BY THE STATE OF FLORIDA BUILDING COMMISSION FOR ONE-AND-TWO FAMILY DWELLINGS.

FOR DESIGN PURPOSES THE FOLLOWING BASIC WIND SPEEDS ARE PER FIGURE R301.2(4) of the Residential Code (Florida Wind speed map) **SHALL BE USED.**

WIND SPEED LINE SHALL BE DEFINED AS FOLLOWS: THE CENTERLINE OF INTERSTATE 75.

1. ALL BUILDINGS CONSTRUCTED EAST OF SAID LINE SHALL BE -------- 100 MPH
2. ALL BUILDINGS CONSTRUCTED WEST OF SAID LINE SHALL BE --------110 MPH
3. NO AREA IN COLUMBIA COUNTY IS IN A WIND BORNE DEBRIS REGION

GENERAL REQUIREMENTS;

- Two (2) complete sets of plans containing the following:
- All drawings must be clear, concise and drawn to scale, details that are not used shall be marked void
- Condition space (Sq. Ft.) and total (Sq. Ft.) under roof shall be shown on the plans.
- Designers name and signature shall be on all documents and a licensed architect or engineer, signature and official embossed seal shall be affixed to the plans and documents per FBC 106.1.

Site Plan information including:

- Dimensions of lot or parcel of land
- Dimensions of all building set backs
- Location of all other structures (include square footage of structures) on parcel, existing or proposed well and septic tank and all utility easements.
- Provide a full legal description of property.

Wind-load Engineering Summary, calculations and any details required:

- Plans or specifications must meet state compliance with FRC Chapter 3
- The following information must be shown as per section FRC
- Basic wind speed (3-second gust), miles per hour
- Wind importance factor and nature of occupancy
- Wind exposure – if more than one wind exposure is used, the wind exposure and applicable wind direction shall be indicated
- The applicable internal pressure coefficient, Components and Cladding The design wind pressure in terms of psf (kN/m²), to be used for the design of exterior component and cladding materials not specifally designed by the registered design professional.

Elevations Drawing including:

- All side views of the structure
- Roof pitch
- Overhang dimensions and detail with attic ventilation
- Location, size and height above roof of chimneys
- Location and size of skylights with Florida Product Approval
- Number of stories
- e) Building height from the established grade to the roofs highest peak

Floor Plan including:

- ✓ Dimensioned area plan showing rooms, attached garage, breeze ways, covered porches, deck, balconies and raised floor surfaces located more than 30 inches above the floor or grade
- ✓ All exterior and interior shear walls indicated
- ✓ Shear wall opening shown (Windows, Doors and Garage doors
- ✓ Emergency escape and rescue opening in each bedroom (net clear opening shown)
- ✓ Safety glazing of glass where needed
- ✓ Fireplaces types (gas appliance) (vented or non-vented) or wood burning with Hearth (see chapter 10 of FRC)
- ✓ Stairs with dimensions (width, tread and riser and total run) details of guardrails, Handrails (see FRC 311)
- ✓ Plans must show and identify accessibility of bathroom (see FRC 322)

All materials placed within opening or onto/into exterior shear walls, soffits or roofs shall have Florida product approval number and mfg. installation information submitted with the plans (see Florida product approval form)

Foundation Plans Per FRC 403:

- ✓ a) Location of all load-bearing walls footings indicated as standard, monolithic, dimensions, size and type of reinforcing.
- ✓ b) All posts and/or column footing including size and reinforcing
- ✓ c) Any special support required by soil analysis such as piling.
- ✓ d) Assumed load-bearing valve of soil_____ (psf)
- ✓ e) Location of horizontal and vertical steel, for foundation or walls (include # size and type)

CONCRETE SLAB ON GRADE Per FRC R506

- ✓ Show Vapor retarder (6mil. Polyethylene with joints lapped 6 inches and sealed)
- ✓ Show control joints, synthetic fiber reinforcement or welded fire fabric reinforcement and Supports

PROTECTION AGAINST TERMITES Per FRC 320:

- ✓ Indicate on the foundation plan if soil treatment is used for subterranean termite prevention or submit other approved termite protection methods. Protection shall be provided by registered termiticides

Masonry Walls and Stem walls (load bearing & shear Walls) FRC Section R606

- ✓ Show all materials making up walls, wall height, and Block size, mortar type
- ✓ Show all Lintel sizes, type, spans and tie-beam sizes and spacing of reinforcement

Metal frame shear wall and roof systems shall be designed, signed and sealed by Florida Prof. Engineer or Architect

Floor Framing System: First and/or second story

- ✓ Floor truss package shall including layout and details, signed and sealed by Florida Registered Professional Engineer
- ✓ Show conventional floor joist type, size, span, spacing and attachment to load bearing walls, stem walls and/or priers
- ✓ Girder type, size and spacing to load bearing walls, stem wall and/or priers
- ✓ Attachment of joist to girder
- ✓ Wind load requirements where applicable
- ○ Show required under-floor crawl space
- ○ Show required amount of ventilation opening for under-floor spaces
- ○ Show required covering of ventilation opening.
- ○ Show the required access opening to access to under-floor spaces
- ○ Show the sub-floor structural panel sheathing type, thickness and fastener schedule on the edges & intermediate of the areas structural panel sheathing
- ✓ Show Draft stopping, Fire caulking and Fire blocking
- ○ Show fireproofing requirements for garages attached to living spaces, per FRC section R309
- ✓ Provide live and dead load rating of floor framing systems (psf).

WOOD WALL FRAMING CONSTRUCTION FRC CHAPTER 6

- Stud type, grade, size, wall height and oc spacing for all load bearing or shear walls.
- Fastener schedule for structural members per table R602.3 (1) are to be shown.
- Show wood structural panel's sheathing attachment to studs, joist, trusses, rafters and structural members, showing fastener schedule attachment on the edges & intermediate of the areas structural panel sheathing
- Show all required connectors with a max uplift rating and required number of connectors and oc spacing for continuous connection of structural walls to foundation and roof trusses or rafter systems.
- Show sizes, type, span lengths and required number of support jack studs, king studs for shear wall opening and girder or header per FRC Table R502.5 (1)
- Indicate where pressure treated wood will be placed.
- Show all wall structural panel sheathing, grade, thickness and show fastener schedule for structural panel sheathing edges & intermediate areas
- A detail showing gable truss bracing, wall balloon framing details or/ and wall hinge bracing detail

ROOF SYSTEMS:

- Truss design drawing shall meet section FRC R802.10 Wood trusses. Include a layout and truss details and be signed and sealed by Fl. Pro. Eng.
- Show types of connector's assemblies' and resistance uplift rating for all trusses and rafters
- Show gable ends with rake beams showing reinforcement or gable truss and wall bracing details
- Provide dead load rating of trusses

Conventional Roof Framing Layout Per FRC 802:

- Rafter and ridge beams sizes, span, species and spacing
- Connectors to wall assemblies' include assemblies' resistance to uplift rating.
- Valley framing and support details
- Provide dead load rating of rafter system.

ROOF SHEATHING FRC Table R602,3(2) FRC 803

- Include all materials which will make up the roof decking, identification of structural panel sheathing, grade, thickness and show fastener schedule for structural panel sheathing on the edges & intermediate areas

ROOF ASSEMBLIES FRC Chapter 9

- Include all materials which will make up the roof assembles covering; with Florida Product Approval numbers for each component of the roof assembles covering.

FCB Chapter 13 Florida Energy Efficiency Code for Building Construction

- Residential construction shall comply with this code by using the following compliance methods in the FBC Subchapter 13-6, Residential buildings compliance methods. Two of the required forms are to be submitted, showing dimensions condition area equal to the total condition living space area
- Show the insulation R value for the following areas of the structure: Attic space, Exterior wall cavity and Crawl space (if applicable)

HVAC information shown

- Manual J sizing equipment or equivalent computation
- Exhaust fans locations in bathrooms

Plumbing Fixture layout shown

- All fixtures waste water lines shall be shown on the foundation plan

Electrical layout shown including:

- Switches, outlets/receptacles, lighting and all required GFCI outlets identified
- Ceiling fans
- Smoke detectors
- Service panel, sub-panel, location(s) and total ampere ratings

- ✓ On the electrical plans identify the electrical service overcurrent protection device for the main electrical service. This device shall be installed on the exterior of structures to serve as a disconnecting means for the utility company electrical service. Conductors used from the exterior disconnecting means to a panel or sub panel shall have four-wire conductors, of which one conductor shall be used as an equipment ground. Indicate if the utility company service entrance cable will be of the overhead or underground type.
- ✓ Appliances and HVAC equipment and disconnects
- ✓ Arc Fault Circuits (AFCI) in bedrooms

✓ Notarized Disclosure Statement for Owner Builders

○ Notice of Commencement Recorded (in the Columbia County Clerk Office) Notice Of Commencement is required to be filed with the building department Before Any Inspections Will Be Done.

Private Potable Water

- ○ Size of pump motor
- ○ Size of pressure tank
- ○ Cycle stop valve if used

THE FOLLOWING ITEMS MUST BE SUBMITTED WITH BUILDING PLANS

✓ Building Permit Application: A current Building Permit Application form is to be completed and submitted for all residential projects.

✓ Parcel Number: The parcel number (Tax ID number) from the Property Appraiser (386) 758-1084 is required. A copy of property deed is also requested.

✓ Environmental Health Permit or Sewer Tap Approval: A copy of the Environmental Health permit, existing septic approval or sewer tap approval is required before a building permit can be issued. (386) 758-1058 (Toilet facilities shall be provided for construction workers)

✓ City Approval: If the project is to be located within the city limits of the Town of Fort White, prior approval is required. The Town of Fort White approval letter is required to be submitted by the owner or contractor to this office when applying for a Building Permit. (386) 497-2321

✓ Flood Information: All projects within the Floodway of the Suwannee or Santa Fe Rivers shall require permitting through the Suwannee River Water Management District, before submitting application to this office. Any project located within a flood zone where the base flood elevation (100 year flood) has been established shall meet the requirements of Section 8.8 of the Columbia County Land Development Regulations. Any project located within a flood zone where the base flood elevation has not been established (Zone A) shall meet the requirements of Section 8.7 of the Columbia County Land Development Regulations. CERTIFIED FINISHED FLOOR ELEVATIONS WILL BE REQUIRED ON ANY PROJECT WHERE THE BASE FLOOD ELEVATION (100 YEAR FLOOD) HAS BEEN ESTABLISHED. A development permit will also be required. The permit cost is $50.00.

✓ Driveway Connection: If the property does not have an existing access to a public road, then an application for a culvert permit ($25.00) must be made. If the applicant feels that a culvert is not needed, they may apply for a culvert waiver ($50.00). All culvert waivers are sent to the Columbia County Public Works Department for approval or denial.

○ 911 Address: If the project is located in an area where the 911 address has been issued, then the proper Paper work from the 911 Addressing Departments must be submitted. (386) 758-1125

ALL REQUIRED INFORMATION IS TO BE SUBMITTED FOR REVIEW. NOTIFICATION WILL BE GIVEN WHEN THE APPLICATION AND PLANS ARE APPROVED AND READY TO PERMIT.

PRODUCT APPROVAL SPECIFICATION SHEET

Location:_____ **Project Name:**_____

As required by Florida Statute 553.842 and Florida Administrative Code 9B-72, please provide the information and the product approval number(s) on the building components listed below if they will be utilized on the construction project for which you are **applying for a building permit on or after April 1, 2004**. We recommend you contact your local product supplier should you not know the product approval number for any of the applicable listed products. More information about statewide product approval can be obtained at

Category/Subcategory	Manufacturer	Product Description	Approval Number(s)
A. EXTERIOR DOORS			
1. Swinging			
2. Sliding			
3. Sectional			
4. Roll up			
5. Automatic			
6. Other			
B. WINDOWS			
1. Single hung			
2. Horizontal Slider			
3. Casement			
4. Double Hung			
5. Fixed			
6. Awning			
7. Pass -through			
8. Projected			
9. Mullion			
10. Wind Breaker			
11 Dual Action			
12. Other			
C. PANEL WALL			
1. Siding			
2. Soffits			
3. EIFS			
4. Storefronts			
5. Curtain walls			
6. Wall louver			
7. Glass block			
8. Membrane			
9. Greenhouse			
10. Other			
D. ROOFING PRODUCTS			
1. Asphalt Shingles			
2. Underlayments			
3. Roofing Fasteners			
4. Non-structural Metal Rf			
5. Built-Up Roofing			
6. Modified Bitumen			
7. Single Ply Roofing Sys			
8. Roofing Tiles			
9. Roofing Insulation			
10. Waterproofing			
11. Wood shingles /shakes			
12. Roofing Slate			

Category/Subcategory (cont.)	Manufacturer	Product Description	Approval Number(s)
13. Liquid Applied Roof Sys			
14. Cements-Adhesives – Coatings			
15. Roof Tile Adhesive			
16. Spray Applied Polyurethane Roof			
17. Other			
E. SHUTTERS			
1. Accordion			
2. Bahama			
3. Storm Panels			
4. Colonial			
5. Roll-up			
6. Equipment			
7. Others			
F. SKYLIGHTS			
1. Skylight			
2. Other			
G. STRUCTURAL COMPONENTS			
1. Wood connector/anchor			
2. Truss plates			
3. Engineered lumber			
4. Railing			
5. Coolers-freezers			
6. Concrete Admixtures			
7. Material			
8. Insulation Forms			
9. Plastics			
10. Deck-Roof			
11. Wall			
12. Sheds			
13. Other			
H. NEW EXTERIOR ENVELOPE PRODUCTS			
1.			
2.			

The products listed below did not demonstrate product approval at plan review. I understand that at the time of inspection of these products, the following information must be available to the inspector on the jobsite; 1) copy of the product approval, 2) the performance characteristics which the product was tested and certified to comply with, 3) copy of the applicable manufacturers installation requirements.

I understand these products may have to be removed if approval cannot be demonstrated during inspection

_____

_____

_____

Contractor or Contractor's Authorized Agent Signature

Print Name

Date

Location

Permit # **(FOR STAFF USE ONLY)**

Website:

Effective April 1, 2004

PRODUCT APPROVAL INFORMATION SHEET

Project Name: Lot 28 Timberlands **Permit #**

Project Address: 252 SW Mulberry Dr. Lake City 32055

As required by Florida Statute 553.842 and Florida Administrative Code 9B-72, please provide the information and product approval number(s) for the building components listed below as applicable to the building construction project for the permit number listed above. You should contact your product supplier if you do not know the product approval number for any of the applicable listed products. Information regarding statewide product approval may be obtained at: www.floridabuilding.org.

Category/Subcategory	Manufacturer	Product Description	Limitation of use	State #	Local #
A. EXTERIOR DOORS					
1. Swinging	**Plastpro**	Fiberglass Doors	**Design Pressure:** +50.0/-50.0 **Other:** See INST 6729.1 and EVAL 6729.1 for any additional use limitations and installation instructions.	6729.1	
2. Sliding	**Simonton/Norandex**	Sliding Glass Doors	**Design Pressure:** +50/-50 **Other:** 3-lite 108x96 3-lite 144x96 Missile impact Rating:Large	5979.1	
3. Sectional					
4. Roll-Up	**Wayne Dalton**	Garage Doors	As indicated in evaluation report and installation drawings. Not to be used in HVHZ. Doors with glazing shall not be used in the wind-borne debris region unless protected or unless structure is designed as partially enclosed or door is a replacement door	5287.1-5287.2 9174.4 9174.5	
B. WINDOWS					
1. Single Hung	**H-R Windows**	Single-Hung Windows	Not for use in HVHZ	5089.1-5089.9,2 09262 09242	
2. Horizontal					

COLUMBIA COUNTY BUILDING DEPARTMENT Received for FILE COPY Code Compliance

Slider					
9. Mullion	**H-R Windows**	Mullions	Not for use in HVHZ. See uploadeddrawing for size limits, design pressure limits, and all other limits of use.	5782.1	
C. PANEL WALL					
1. Siding	**Owens Corning**	Siding	Refer to Evaluation Report for specific product profiles, attachment and design pressures.	4617.1-4617-2	
2. Soffitts	**Owens Corning**	Soffitt	Refer to Evaluation Report for wind load limitations specific to each profile and span.	6869.1-6869-5	
7. Glass Block					
D. ROOFING PRODUCTS					
1. Asphalt Shingles	**Owens Corning**		Products must be install in accordance with Florida Building Code Non High Velocity Hurricane Zone Area and per Manufacturers Installation Drawings. This Approval not for use in the HVHZ.	3663.1-3663.9	
2. Underlayments	**Owens Corning**	Waterproofing Underlayment	This Approval does not cover HVHZ. Products shall be installed in accordance with FBC Sections for Non-HVHZ and per manufacturers Installation Drawings	3349.1 3349.2	
3. Roofing Tiles					
E. SHUTTERS			N/A		
F. STRUCTURAL COMPONENTS					
1. Wood connector/anchor	**Simpson Strong-Tie Co**	Wood Connectors Anchors, Structural adhesive, Adjustable Post Base, Truss Bearing Enhancer, Stud-Plate Connector	Limitations per attached evaluation report. Acceptable for HVHZ.	474-R1 503-R1 538-R1 1423-R2 1463-R2 1725-R1 1901-R3 2304-R1 2355-R2 3751-R1	
			▪		
2. Truss Plates	**MiTek Industries, Inc.**	Truss Plates Metal Connector Plate	Products must be install in accordance with Florida Building Code per Manufacturers Installation Drawings	2197.R1 2197.R2 7987-R1	

	Alpine Engineered Products, Inc.	Truss Plates Alpine HS Metal Connector Plate	per TPI 1-1995	1999R-2	
3. Engineered lumber	**Trus Joist, A Weyerhaeuser Business**	Engineered Lumber- e-Rim Board, Microllam LVL, Parallam PSL, TimberStrand LSL, TJ-Strand Rim Board, TJI	Products must be install in accordance with Florida Building Code and per Manufacturers Installation Drawings	1630-R3 4478-R1 6527-R1	
	Boise Engineered Wood Products	Engineered Wood "I" Joist-BCI 400s-BCI 900s. Versa-Lam SP (laminated veneer lumber). AJS ALLJOIST	Products must be install in accordance with Florida Building Code and per Manufacturers Installation Drawings	1392-R1 1644-R1 1645-R1	
H. NEW EXTERIOR ENVELOPE PRODUCTS					
1.	**James Hardie Bldg Products**	fiber-cement cladding	Installed per Manufacturers Installation Drawings. Anchor Size, Type and Spacing are determined by the type of construction per Manufacturers Installation Drawings.	889.1- 889.10-	

In addition to completing the above list of manufacturers, product description and State approval number for the products used on this project, it is the Contractor's or Authorized Agent's responsibility to have a legible copy of each manufacturer's printed instructions, along with the list above, on the job site available to the inspector.

The products listed below did not demonstrate product approval at time of plan review. I understand that before these products can be inspected, they must be submitted for review for code compliance and approved by a Plans Examiner. This form will be revised to include each new product in the categories listed above and will be highlighted to indicate the new products and required information.

Maronda Systems

Maronda Systems 4005 Maronda Way Sanford FL 32771 (407) 321-0064 Fax (407) 321-3913
Engineer/Architect of Record: Tomas Ponce P.E. 367 Medallion PL. Chuluota
Design Criteria: TPI Design: Matrix Analysis MiTek software

PLAN JOB #	LOT	ADDRESS	DIV/SUB	MODEL
9TM02801	28-1	252 SW MULBERRY DR	JAX-9TM	AUSC3 RIGHT

AUSTIN C3

This structure was designed in accordance with, and meets the requirements of TPI standards and the FLORIDA 2004 BUILDING CODE for 125 M.P.H. Wind Zone. Truss loading is in accordance with ASCE 7-02. These trusses are designed for an enclosed building.

The Truss Engineering package for the above referenced site was generated by the Truss Designer/Architect/MiTek/Trenco.
I, Tomas Ponce P.E. the Architect/Engineer of Record for the above referenced lot Have reviewed the package and confirmed that it matches the physical and structural Parameters found on the set of permit drawings.

Truss ID	Run Date	Drawing Reviewed	Truss ID	Run Date	Drawing Reviewed
Layout	11/07/07	02/21/08	CGRD1	11/21/07	02/21/08
V	07/27/05	02/21/08	JGRD2	01/07/08	02/21/08
HIP	11/02/06	02/21/08	J3A	01/07/08	02/21/08
S1	11/21/07	02/21/08	J4	01/07/08	02/21/08
S1S	11/21/07	02/21/08	C1	01/07/08	02/21/08
H1	11/21/07	02/21/08	V1	11/21/07	02/21/08
H2	11/21/07	02/21/08	V2	11/21/07	02/21/08
H3	11/21/07	02/21/08	V3	11/21/07	02/21/08
H4	11/21/07	02/21/08	V4	11/21/07	02/21/08
MH4	11/21/07	02/21/08	V5	11/21/07	02/21/08
MHGRD1	11/21/07	02/21/08	V6	11/21/07	02/21/08
HS1	11/21/07	02/21/08	V14	11/21/07	02/21/08
HS2	11/21/07	02/21/08			
HS3	11/21/07	02/21/08			
HS4	11/21/07	02/21/08			
HS5	11/21/07	02/21/08			
HSGRD1	11/21/07	02/21/08			
GRD1	11/21/07	02/21/08			
T1	11/21/07	02/21/08			
H5	11/21/07	02/21/08			
HGRD2	11/21/07	02/21/08			
JGRD1	11/21/07	02/21/08			
JSGRD1	11/21/07	02/21/08			
J	11/21/07	02/21/08			
JSA	11/21/07	02/21/08			
J1	11/21/07	02/21/08			
J2	11/21/07	02/21/08			
J3	11/21/07	02/21/08			
JS1	11/21/07	02/21/08			
JS2	11/21/07	02/21/08			
JS3	11/21/07	02/21/08			

No. of Eng. Dwgs:	43
Roof Loads-	
TC Live:	16.0 psf
TC Dead:	7.0 psf
BC Live:	10.0 psf
BC Dead:	10.0 psf
Total	43.0 psf
DurFac- Lbr:	1.25
DurFac- Plt:	1.25
O.C. Spacing:	24.0"
Floor Loads-	
TC Live:	40.0 psf
TC Dead:	10.0 psf
BC Live:	0.0 psf
BC Dead:	5.0 psf
Total	55.0 psf
DurFac- Lbr:	1.00
DurFac- Plt:	1.00
O.C. Spacing:	24.0"

INV #	DESC	QNTY
50060.0114	THD48	
50060.0048	THD26	5
50060.0110	JUS26	
50060.0058	THJ26	5
50060.0049	THD28-2	1
SEAT PLATES		129
FLOOR SEAT PLATES		

COLUMBIA COUNTY BUILDING DEPARTMENT
Received for
FILE COPY
Code Compliance
PLANS EXAMINER

DATE: SEP 30 2008

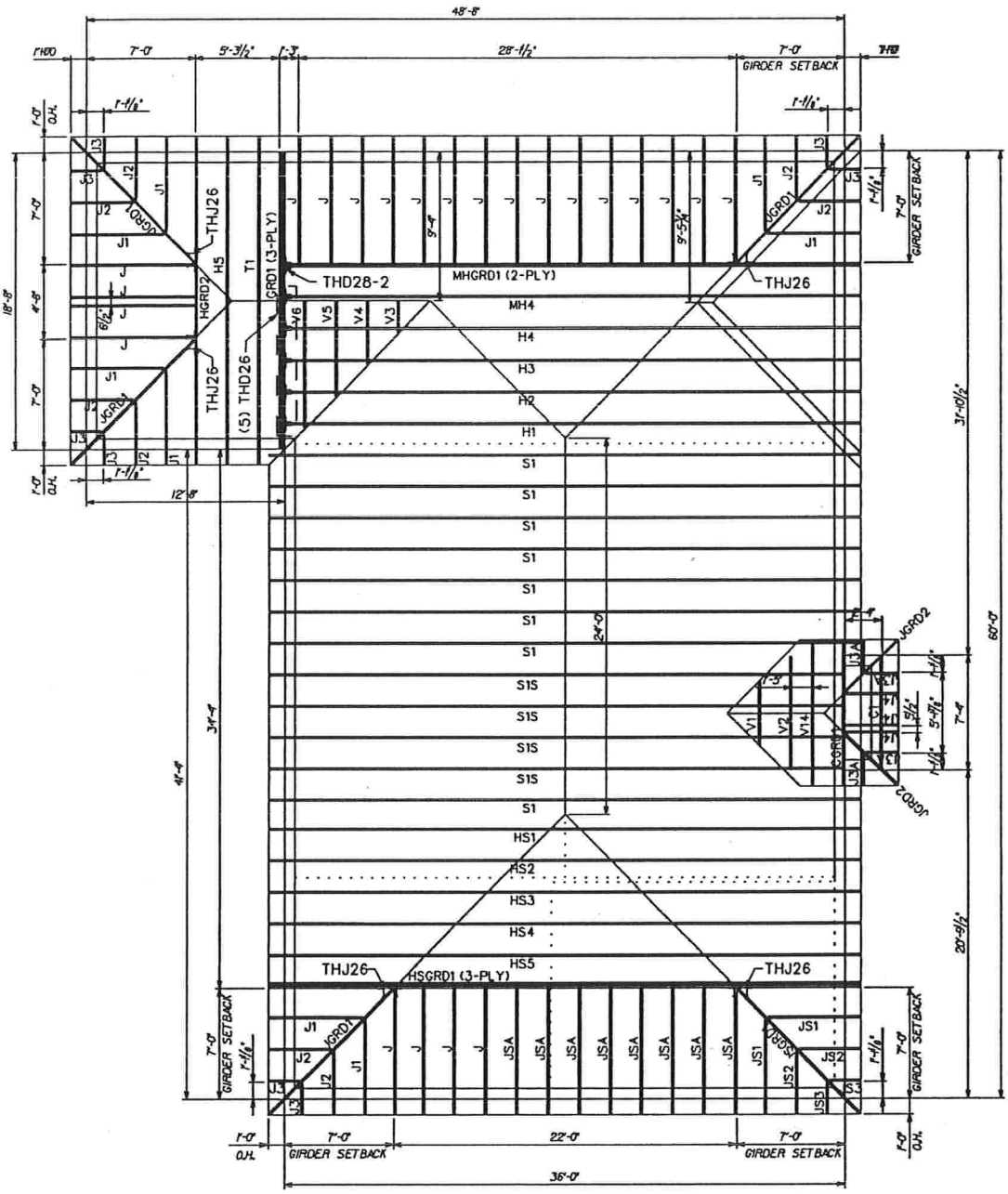

HARDWARE LEGEND

1	HUS26
2	HUS28
3	JUS26
4	MP6F
5	MPA1 & MPA1F
6	SKH26 L/R
7	SKHH26 L/R
8	SUS26
9	SUS28
10	THD26
11	THD28
12	THD28-2
13	THDH28-3
14	THD48
15	THJ26**
16	LTW12

SEP 30 2008

HARDWARE MANUFACTURED BY USP

* HARDWARE MANUFACTURED BY SIMPSON

** HARDWARE MANUFACTURED BY CLEVELAND

AUSTIN 3 "C" - FL

GARAGE: RIGHT

DESIGNER: CP
CHECKER: MIKE
DRAWN BY: EJ

SCALE: 1/8" = 1'-0"
DATE: 10/10/2007

LOADING-FBC2004/TPI2002

TC LIVE	16.00	SNOW LOAD	0.00
TC DEAD	7.00	LUMBER DOL	1.25
BC LIVE	10.00	PLATE DOL	1.25
BC DEAD	10.00	WIND	125
TOTAL	43.00	SPACING	2'-0"

Maronda Homes

(407) 321-0064 4005 MARONDA WAY SANFORD, FLORIDA

MITEK 2000 LAYOUT SYSTEM

1.800.648.3587 - miteksupport@mii.com

...\Mitek_III\00053-C-125-6x1 .III Feb. 13, 2006 15:46:39

WARNING! BCSI-B1 SUMMARY SHEET - GUIDE FOR HA

GENERAL NOTES

Trusses are not marked in any way to identify the frequency or location of temporary lateral restraint and diagonal bracing. Follow the recommendations for handling, installing and temporary restraining and bracing of trusses. Refer to BCSI Guide to Good Practice for Handling, Installing, Restraining & Bracing of Metal Plate Connected Wood Trusses for more detailed information.

Truss Design Drawings may specify locations of permanent lateral restraint or reinforcement for individual truss members. Refer to the BCSI-B3 Summary Sheet – Permanent Restraint/Bracing of Chords & Web Members for more information. All other permanent bracing design is the responsibility of the Building Designer.

NOTAS GENERALES

Los trusses no están marcados de ningún modo que identifique la frecuencia o localización de restricción lateral y arriostre diagonal temporales. Use las recomendaciones de manejo, instalación, restricción y arriostre temporal de los trusses. Vea el folleto BCSI Guía de Buena Práctica para el Manejo, Instalación, Restricción y Arriostre de los Trusses de Madera Conectados con Placas de Metal para información más detallada.

Los dibujos de diseño de los trusses pueden especificar las localizaciones de restricción lateral permanente o refuerzo en los miembros individuales del truss. Vea la hoja resumen BCSI-B3 – Restricción/Arriostre Permanente de Cuerdas y Miembros Secundarios para más información. El resto de los diseños de arriostres permanentes son la responsabilidad del Diseñador del Edificio.

⚠ The consequences of improper handling, erecting, installing, restraining and bracing can result in a collapse of the structure, or worse, serious personal injury or death.

El resultado de un manejo, levantamiento, instalación, restricción y arrisotre incorrecto puede ser la caída de la estructura o aún peor, heridos o muertos.

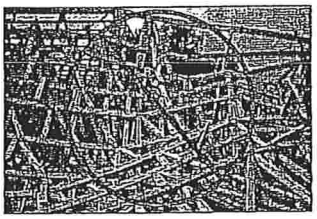

⚠ Banding and truss plates have sharp edges. Wear gloves when handling and safety glasses when cutting banding.

Empaques y placas de metal tienen bordes afilados. Use guantes y lentes protectores cuando corte los empaques.

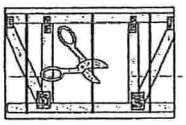

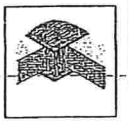

HANDLING — MANEJO

⚠ Avoid lateral bending. — Evite la flexión lateral.

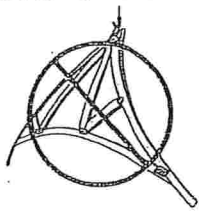

⚠ Use special care in windy weather or near power lines and airports.

Utilice cuidado especial en días ventosos o cerca de cables eléctricos o de aeropuertos.

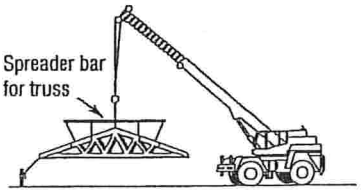

⚠ The contractor is responsible for properly receiving, unloading and storing the trusses at the jobsite.

El contratista tiene la responsabilidad de recibir, descargar y almacenar adecuadamente los trusses en la obra.

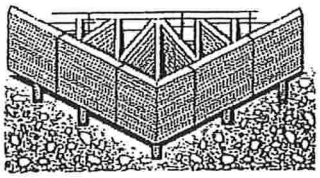

☑ Use proper rigging and hoisting equipment.

Use equipo apropiado para levantar e improvisar.

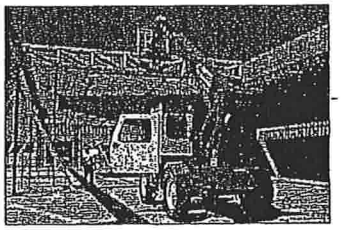

☑ If trusses are to be stored horizontally, place blocking of sufficient height beneath the stack of trusses at 8' to 10' on center.

For trusses stored for more than one week, cover bundles to prevent moisture gain but allow for ventilation.

Refer to BCSI Guide to Good Practice for Handling, Installing, Restraining & Bracing of Metal Plate Connected Wood Trusses for more detailed information pertaining to handling and jobsite storage of trusses.

Si los trusses estarán guardados horizontalmente, ponga bloqueando de altura suficiente detrás de la pila de los trusses.

Para trusses guardados por más de una semana, cubra los paquetes para prevenir aumento de humedad pero permita ventilación.

Vea el folleto BCSI Guía de Buena Práctica para el Manejo, Instalación, Restricción y Arriostres de los Trusses de Madera Conectados con Placas de Metal para información más detallada sobre el manejo y almacenado de los trusses en área de trabajo.

⊘ Do not store unbraced bundles upright.

No almacene verticalmente los trusses sueltos.

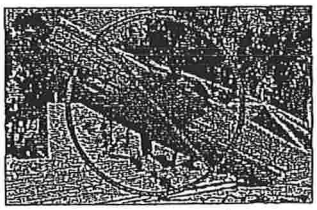

⊘ Do not store on uneven ground.

No almacene en tierra desigual.

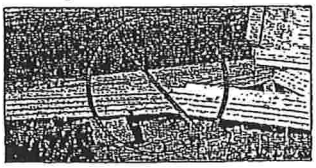

HOISTING RECOMMENDATIONS FOR TRUSS BUNDLES
RECOMENDACIONES PARA LEVANTAR PAQUETES DE TRUSSES.

⚠ Warning! Don't overload the crane.
¡Advertencia! ¡No sobrecarga la grúa!

⊘ Never use banding alone to lift a bundle.
Do not lift a group of individually banded bundles.

Nunca use sólo los empaques para levantar un paquete.
No levante un grupo de empaques individuales.

☑ A single lift point may be used for bundles with trusses up to 45'.
Two lift points may be used for bundles with trusses up to 60'.
Usé at least 3 lift points for bundles with trusses greater than 60'.

Puede usar un solo lugar de levantar para paquetes de trusses hasta 45 pies.
Puede usar dos puntos de levantar para paquetes más de 60 pies.
Use por lo menos tres puntos de levantar para paquetes más de 60 pies.

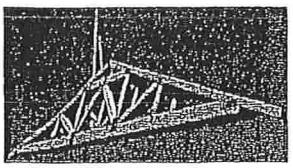

⚠ Warning! Do not over load supporting structure with truss bundle.

¡Advertencia! No sobrecargue la estructura apoyada con el paquete de trusses.

☑ Place truss bundles in stable position.

Puse paquetes de trusses en una posición estable.

INSTALLATION OF SINGLE TRUSSES BY HAND
INSTALACIÓN POR LA MANO DE TRUSSES INDIVIDUALES

☑ Trusses 20' or less, support at peak.

Levante del pico los trusses de 20 pies o menos.

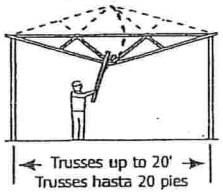

☑ Trusses 30' or less, support at quarter points.

Levante de los cuartos de tramo los trusses de 30 pies o menos.

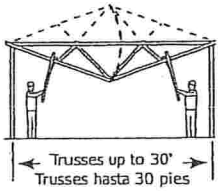

HOISTING OF SINGLE TRUSSES — LEVANTAMIENTO DE TRUSSES INDIVIDUALI

☑ Hold each truss in position with the erection equipment until top chord temporary lateral restraint is installed and the truss is fastened to the bearing points.

Sostenga cada truss en posición con equipo de grúa hasta que la restricción lateral temporal de la cuerda superior esté instalado y el truss está asegurado en los soportes.

⚠ Warning! Using a single pick-point at the peak can damage the truss.

¡Advertencia! El uso de un solo lugar para levantar en el pico puede hacer daño al truss.

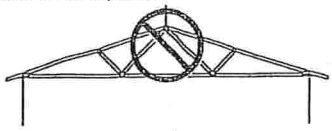

HOISTING RECOMMENDATIONS FOR SINGLE TRUSSES
RECOMENDACIONES PARA LEVANTAR TRUSSES INDIVIDUALES

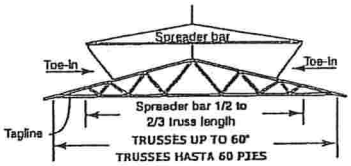

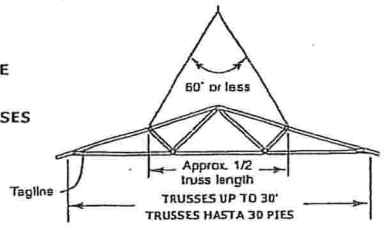

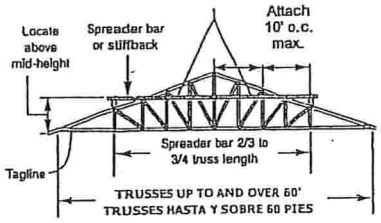

TEMPORARY RESTRAINT & BRACING
RESTRICCIÓN Y ARRIOSTRE TEMPORAL

⚠ Refer to BCSI-B2 Summary Sheet – Truss Installation & Temporary Restraint/Bracing for more information.

Vea el resumen BCSI B2 – Restricción/ Arriostre Temporal y Instalación de los Trusses para más información.

☑ Locate ground braces for first truss directly in line with all rows of top chord temporary lateral restraint (see table in the next column).

Coloque los arriostres de tierra para el primer truss directamente en línea con cada una de las filas de restricción lateral temporal de la cuerda superior (vea la table en la próxima columna).

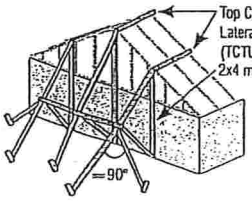

⊘ Do not walk on unbraced trusses.

No camine en trusses sueltos.

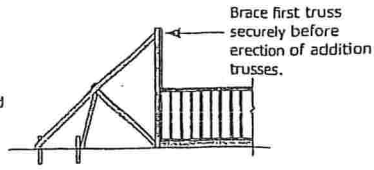

¡ADVERTENCIA! HOJA RESUMEN DE LA GUÍA DE BUENA PRÁCTICA PAR

TEPS TO SETTING TRUSSES
AS MEDIDAS DE LA INSTALLACIÓN DE LOS TRUSSES

1) Install ground bracing. 2) Set first truss and attach securely to ground bracing. 3) Set next 4 trusses with short member temporary lateral restraint (see below). 4) Install top chord diagonal bracing (see below). 5) Install web member plane diagonal bracing to stabilize the first five trusses (see below). 6) Install bottom chord temporary lateral restraint and diagonal bracing (see below). 7) Repeat process on groups of four trusses until all trusses are set.

1) Instale los arriostres de tierra. 2) Instale el primero truss y ate seguramente al arriostre de tierra. 3) Instale los próximos cuatro trusses con restricción lateral temporal de miembro corto (vea abajo). 4) Instale el arriostre diagonal de la cuerda superior (vea abajo). 5) Instale arriostre diagonal para los planos de los miembros secundarios para estable los primeros cinco trusses (vea abajo). 6) Instale la restricción lateral temporal y arriostre diagonal para la cuerda inferior (vea abajo). 7) Repita éste procedimiento en grupos de cuatro trusses hasta que todos los trusses estén instalados.

Refer to BCSI-B2 Summary Sheet – Truss Installation & Temporary Restraint/Bracing for more information.

Vea el resúmen BCSI-B2 - Instalación de Trusses y Arriostre Temporal para mayor información.

ESTRAINT/BRACING FOR ALL PLANES OF TRUSSES
RESTRICCIÓN/ARRIOSTRE EN TODOS PLANOS DE TRUSSES.

This restraint & bracing method is for all trusses except 3x2 and 4x2 parallel chord trusses.

Este método de restricción y arriostre es para todo trusses excepto trusses de cuerdas paralelas 3x2 y 4x2.

) TOP CHORD — CUERDA SUPERIOR

Truss Span Longitud de Tramo	Top Chord Temporary Lateral Restraint (TCTLR) Spacing Espaciamiento del Arriostre Temporal de la Cuerda Superior
Up to 30' Hasta 30 pies	10' o.c. max. 10 pies máximo
30' to 45' 30 a 45 pies	8' o.c. max. 8 pies máximo
45' to 60' 45 a 60 pies	6' o.c. max. 6 pies máximo
60' to 80'* 60 a 80 pies*	4' o.c. max. 4 pies máximo

*Consult a Professional Engineer for trusses longer than 60'.
*Consulte a un ingeniero para trusses de mas de 60 pies.

See BCSI-B2 for TCTLR options.
Vea el BCSI-B2 para las opciones de TCTLR.

Refer to BCSI-B3 Summary Sheet – Permanent Restraint/Bracing of Chords & Web Members for Gable End Frame restraint/bracing/reinforcement information.

Para información sobre restricción/arriostre/refuerzo para armazón de hastial vea el resumen BCSI-B3 – Restricción/Arriostre Permanente de Cuerdas y Miembros Secundarios.

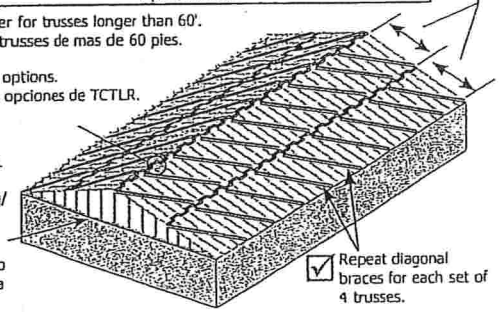

Repeat diagonal braces for each set of 4 trusses.

Repita los arrisotres diagonales para cada grupo de 4 trusses.

Ground bracing not shown for clarity.

) WEB MEMBER PLANE — PLANO DE LOS MIEMBROS SECUNDARIOS

LATERAL RESTRAINT & DIAGONAL BRACING ARE VERY IMPORTANT
LA RESTRICCIÓN LATERAL Y EL ARRIOSTRE DIAGONAL SON MUY IMPORTANTES!

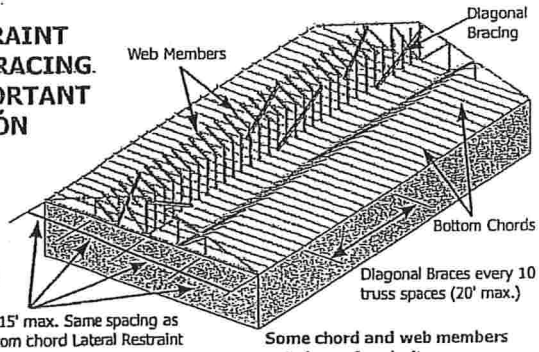

Some chord and web members not shown for clarity.

3) BOTTOM CHORD — CUERDA INFERIOR

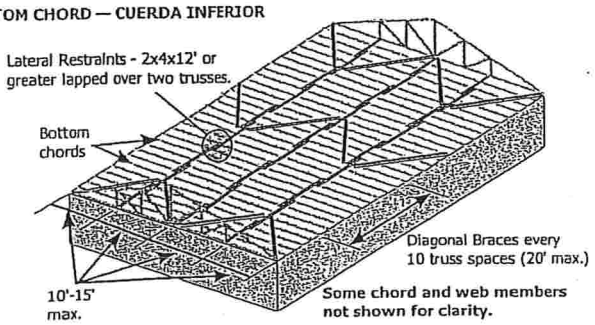

Some chord and web members not shown for clarity.

RESTRAINT & BRACING FOR 3x2 AND 4x2 PARALLEL CHORD TRUSSES
LA RESTRICCIÓN Y EL ARRIOSTRE PARA TRUSSES DE CUERDAS PARALELAS 3X2 Y 4X2

Refer to BCSI-B7 Summary Sheet - Temporary & Permanent Restraint/Bracing for Parallel Chord Trusses for more information.

Vea el resumen BCSI-B7 – Restricción y Arriostre Temporal y Permanente de Trusses de Cuerdas Paralelas para más información.

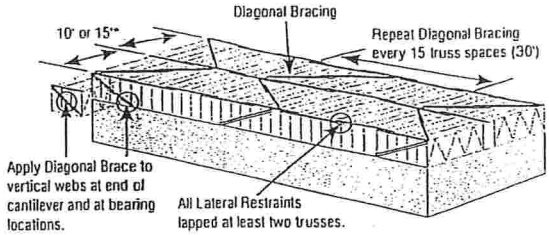

*Top chord Temporary Lateral Restraint spacing shall be 10' o.c. max. for 3x2 chords and 15' o.c. for 4x2 chords.

INSTALLING — INSTALACION

Tolerances for Out-of-Plane.
Tolerancias para Fuera-de-Plano.

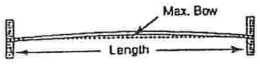

Tolerances for Out-of-Plumb.

Tolerancias para Fuera-de-Plomada.

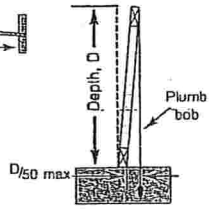

Out-of-Plumb	
D/50	D (ft.)
1/4"	1'
1/2"	2'
3/4"	3'
1"	4'
1-1/4"	5'
1-1/2"	6'
1-3/4"	7'
2"	≥8'

Out-of-Plane	
Max. Bow	Truss Length
3/4"	12.5'
7/8"	14.6'
1"	16.7'
1-1/8"	18.8'
1-1/4"	20.8'
1-3/8"	22.9'
1-1/2"	25.0'
1-3/4"	29.2'
2"	≥33.3'

CONSTRUCTION LOADING — CARGA DE CONSTRUCCION

Do not proceed with construction until all lateral restraint and bracing is securely and properly in place.

No proceda con la construcción hasta que todas las restricciones laterales y los arriostres estén colocados en forma apropiada y segura.

Do not exceed maximum stack heights. Refer to BCSI-B4 Summary Sheet - Construction Loading for more information.

No exceda las máximas alturas recomendadas. Vea el resúmen BCSI-B4 Carga de Construcción para mayor Información.

Maximum Stack Heights for Material on Trusses	
Material	Height
Gypsum Board	12"
Plywood or OSB	16"
Asphalt Shingles	2 bundles
Concrete Block	8"
Clay Tile	3-4 tiles high

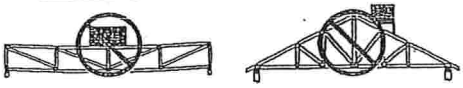

Do not overload small groups or single trusses.
No sobrecargue pequeños grupos o trusses individuales.

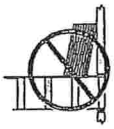

Never stack materials near a peak.
Nunca amontone material cerca del pico.

Place loads over as many trusses as possible.
Coloque las cargas sobre tantos trusses como sea posible.

Position loads over load bearing walls.
Coloque las cargas sobre las paredes soportantes.

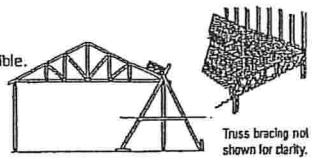

Truss bracing not shown for clarity.

ALTERATIONS — ALTERACIONES

Refer to BCSI-B5 Summary Sheet - Truss Damage, Jobsite Modifications & Installation Errors.

Vea el resúmen BCSI-B5 Daños de trusses, Modificaciones en la Obra y Errores de Instalación.

Do not cut, alter, or drill any structural member of a truss unless specifically permitted by the Truss Design Drawing.

No corte, altere o perfore ningún miembro estructural de los trusses, a menos que esté especificamente permitido en el dibujo del diseño del truss.

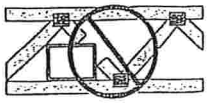

Trusses that have been overloaded during construction or altered without the Truss Manufacturer's prior approval may render the Truss Manufacturer's limited warranty null and void.

Trusses que se han sobrecargado durante la construcción o han sido alterados sin una autorización previa del Fabricante de Trusses, pueden reducir o eliminar la garantía del Fabricante de Trusses.

WTCA
6300 Enterprise Lane • Madison, WI 53719
608/274-4849 • www.sbcindustry.com

TPI
TRUSS PLATE INSTITUTE
218 N. Lee St., Ste. 312 • Alexandria, VA 22314
703/683-1010 • www.tpinst.org

B1WARN11x17 20061115

Maronda Systems

MARONDA SYSTEMS *4005 Maronda Way* *Sanford, FL 32771* *(407) 321-0064* *Fax (407) 321-3913*

Date: November 1, 2006

To: Building Department

From: Maronda Systems
Tomas Ponce
Professional Engineer
State of Florida #0050068

Subject: Valley Trusses

All valley trusses labeled V-1 through 100 are covered under the general valley sheet provided in the truss package signed and sealed by the engineer of record. The connections are noted on the structural info sheet of the plans. All criteria of the valley trusses are noted on the general sheet.

If you have any questions please feel free to call at 407-321-0064.

Sincerely,

Tomas Ponce, P.E.
Date: 11/1/06

Job: MARONDA SYSTEMS | Customer: | WO:VALLEY SET | TI:V | Qty:1

DESIGN INFORMATION

This design is for an individual building component and has been based on information provided by the client. The designer disclaims any responsibility for damages as a result of faulty or incorrect information, specifications and/or designs furnished to the truss designer by the client and the correctness or accuracy of this information as it may relate to a specific project and accepts no responsibility or exercises no control with regard to fabrication, handling, shipment and installation of trusses. This truss has been designed as an individual building component in accordance with ANSI/TPI 1-1995 and NDS-97 to be incorporated as part of the building design by a Building Designer (registered architect or professional engineer). When reviewed for approval by the building designer, the design loadings shown must be checked to be sure that the data shown are in agreement with the local building codes, local climatic records for wind or snow loads, project specifications or special applied loads. Unless shown, truss has not been designed for storage or occupancy loads. The design assumes compression chords (top or bottom) are continuously braced by sheathing unless otherwise specified. Where bottom chords in tension are not fully braced laterally by a properly applied rigid ceiling, they should be braced at a maximum spacing of 10'-0" o.c. Connector plates shall be manufactured from 20 gauge hot dipped galvanized steel meeting ASTM A 653, Grade 40, unless otherwise shown.

FABRICATION NOTES

Prior to fabrication, the fabricator shall review this drawing to verify that this drawing is in conformance with the fabricator's plans and to realize a continuing responsibility for such verification. Any discrepancies are to be put in writing before cutting or fabrication. Plates shall not be installed over knotholes, knots or distorted grain. Members shall be cut for tight fitting wood to wood bearing. Connector plates shall be located on both faces of the truss with nails fully imbedded and shall be sym. about the joint unless otherwise shown. A 5x4 plate is 5" wide x 4" long. A 6x8 plate is 6" wide x 8" long. Slots (holes) run parallel to the plate length specified. Double cuts on web members shall meet at the centroid of the webs unless otherwise shown. Connector plate sizes are minimum sizes based on the forces shown and may need to be increased for certain handling and/or erection stresses. This truss is not to be fabricated with fire retardant treated lumber unless otherwise shown. For additional information on Quality Control refer to ANSI/TPI 1-1995

PRECAUTIONARY NOTES

All bracing and erection recommendations are to be followed in accordance with "Handling, Installing and Bracing", HIB-91. Trusses are to be handled with particular care during banding and bundling, delivery and installation to avoid damage. Temporary and permanent bracing for holding trusses in a straight and plumb position and for resisting lateral forces shall be designed and installed by others. Careful handling is essential and erection bracing is always required. Normal precautionary action for trusses requires such temporary bracing during installation between trusses to avoid toppling and dominoing. The supervision of erection of trusses shall be under the control of persons experienced in the installation of trusses. Professional advice shall be sought if needed. Concentration of construction loads greater than the design loads shall not be applied to trusses at any time. No loads other than the weight of the erectors shall be applied to trusses until after all fastening and bracing is completed.

TOP CHORDS: 2X4 SP #2
BOT CHORDS: 2X4 SP #2
WEBS: 2X4 SP #3

T/C MUST BE CONTINUOUSLY BRACED BY ROOF SHEATHING UNLESS NOTED OTHERWISE.

VALLEY MEMBERS TO BE SET PERPENDICULAR TO TRUSSES BELOW.

IT IS NOT REQUIRED TO SHEATH TRUSSES BELOW VALLEY SET. VALLEY MEMBERS PROVIDE ALL NECESSARY TOP CHORD BRACING.

WHEN VALLEY MEMBERS ARE NAILED DIRECTLY TO TRUSS TOP CHORDS USE (2) 16D NAILS PER INTERSECTION, OR TWO FEET ON CENTER. WHEN BELOW TRUSSES ARE SHEATHED FIRST USE (2) 10d NAILS OR (1) 16d NAIL PER INTERSECTION, OR TWO FEET ON CENTER.

2X4 TRANSVERSE BRACING NAILED FLAT TO EDGE OF WEB WITH 12d NAILS AT 8" O.C. OR A SCAB OF THE SAME DIMENSION AND GRADE AS WEB; NAILED TO FACE (S) OF WEB WITH 10d NAILS STAGGERED 8" O.C. SCAB OR TRANSVERSE BRACKING TO EXTEND FOR 90% OF WEB LENGTH. 2X6 BRACE REQUIRED ON ANY WEB EXCEEDING 14'.

*** denotes ONE edge or one face

**** denotes BOTH edges or Both faces.

(1) ONE BRACE REQUIRED ON WEBS > = 94.0" LONG *
(2) TWO BRACES REQ'D ON WEBS > =126.0" LONG. **

VALLEY TRUSSES ARE ACCEPTABLE TO BE CANTILEVERED UP TO TWO FEET.

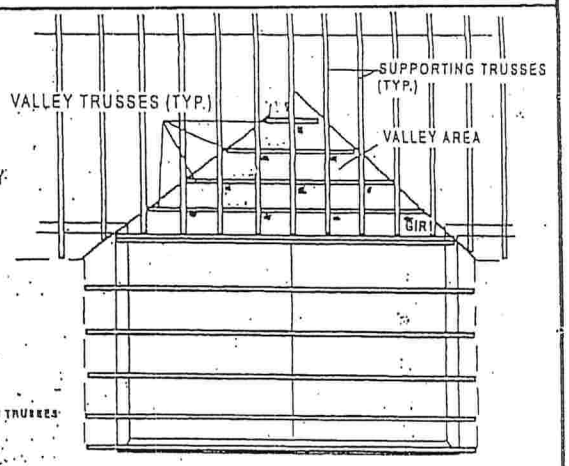

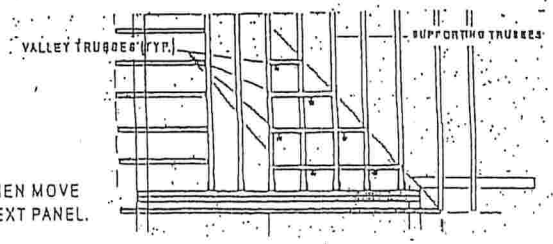

(*) WHEN DIAGONAL WEB PRESENT USE 4X8 PLATE

(#) WHEN NO DIAGONAL WEB PRESENT USE 2X4 PLATE

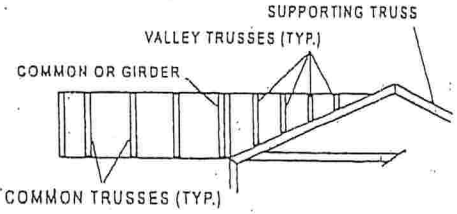

* VALLEY STRAPPING TO TRUSS BELOW @ 4' O.C.

IF LESS THEN 3-0-0 THEN MOVE DIAGONAL WEB TO NEXT PANEL.

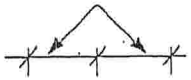

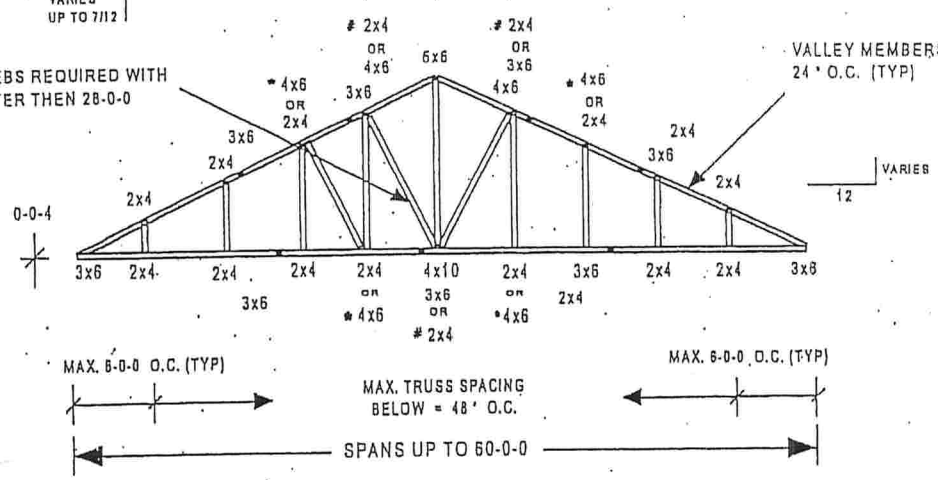

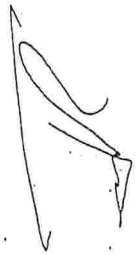

DEC 17 2005

EXCEPT AS SHOWN PLATES ARE TL20 GA TESTED PER ANSI/TPI 1-1995 Cont. Support Studs @ 6-0-0 O.C.

Maronda Systems
4005 MARONDA WAY
Sanford, FL. 32771
(407) 321-0064 Fax (407) 321-3913
TOMAS PONCE P.E. LICENSE #0050068
1005 VANNESSA DR. OVIEDO FL 32766

WARNING:
READ ALL NOTES ON THIS SHEET. A COPY OF THIS DRAWING TO BE GIVEN TO ERECTING CONTRACTOR. BRACING WARNING:
Bracing shown on this drawing is not erection bracing, wind bracing, portal bracing or similar bracing which is a part of the building design and which must be considered by the building designer. Bracing shown is for lateral support of truss members only to reduce buckling length. Provisions must be made to anchor lateral bracing at ends and specified locations determined by the building designer. Additional bracing of the overall structure may be required. (See HIB-91 of TPI).For specific truss bracing requirements, contact building designer.(Truss Plate Institute, TPI is located at 583 D'Onofrio Drive, Madison, Wisconsin 53719).

Eng Job:			WO: VALLEY SET
Dwg:			TI: V
Dsgnr:TLY	Chk:		7/27/2005
TC Live	16.0	psf	Lbr DF: 1.25
TC Dead	7.0	psf	Plt DF: 1.25
BC Live	10.0	psf	O.C.: 2- 0- 0
BC Dead	2.0	psf	TPI-02/FBC-04
TOTAL	35.0	psf	Code: FLA
			v4.7.21-4355

Design: Matrix Analysis Profile Path: C:\TEE-LOK\Work\Jobs\MARONDA SYSTEMS\VT.prx

DESIGN INFORMATION

This design is for an individual building component and has been based on information provided by the client. The designer disclaims any responsibility for damages as a result of faulty or incorrect information, specifications and/or designs furnished to the truss designer by the client and the correctness or accuracy of this information as it may relate to a specific project and accepts no responsibility or exercises no control with regard to fabrication, handling, shipment and installation of trusses. This truss has been designed as an individual building component in accordance with ANSI/TPI 1-1995 and NDS-97 to be incorporated as part of the building design by a Building Designer. When reviewed for approval by the building designer, the design loadings shown must be checked to be sure that the data shown are in agreement with the local building codes, local climatic records for wind or snow loads, project specifications or special applied loads. Unless shown, truss has not been designed for storage or occupancy loads. The design assumes compression chords (top or bottom) are continuously braced by sheathing unless otherwise specified. Where bottom chords in tension are not fully braced laterally by a properly applied rigid ceiling, they should be braced at a maximum spacing of 10'-0" o.c. Connector plates shall be manufactured from 20 gauge hot dipped galvanized steel meeting ASTM A 653, Grade 40, unless otherwise shown.

FABRICATION NOTES

Prior to fabrication, the fabricator shall review this drawing to verify that this drawing is in conformance with the fabricator's plans and to realize a continuing responsibility for such verification. Any discrepancies are to be put in writing before cutting or fabrication. Plates shall not be installed over knotholes, knots or distorted grain. Members shall be cut for tight fitting wood to wood bearing. Connector plates shall be located on both faces of the truss with nails fully imbedded and shall be sym. about the joint unless otherwise shown. A 5x4 plate is 5" wide x 4" long. A 6x8 plate is 6" wide x 8" long. Slots (holes) run parallel to the plate length specified. Double cuts on web members shall meet at the centroid of the webs unless otherwise shown. Connector plate sizes are minimum sizes based on the forces shown and may need to be increased for certain handling and/or erection stresses. This truss is not to be fabricated with fire retardant treated lumber unless otherwise shown. For additional information on Quality Control refer to ANSI/TPI 1-1995

PRECAUTIONARY NOTES

All bracing and erection recommendations are to be followed in accordance with accepted industry publications. Trusses are to be handled with particular care during banding and bundling, delivery and installation to avoid damage. Temporary and permanent bracing for holding trusses in a straight and plumb position and for resisting lateral forces shall be designed and installed by others. Careful handling is essential and erection bracing is always required. Normal precautionary action for trusses requires such temporary bracing during installation between trusses to avoid toppling and dominoing. The supervision of erection of trusses shall be under the control of persons experienced in the installation of trusses. Professional advice shall be sought if needed. Concentration of construction loads greater than the design loads shall not be applied to trusses at any time. No loads other than the weight of the erectors shall be applied to trusses until after all fastening and bracing is completed

HIP TRUSS BLOCKING REQUIREMENTS

APA-FORM NO. TT-083

SPAN RATING AND BLOCKING RECOMMENDATIONS FOR USE OVER HIP-ROOFS SUPPORT AT 24" O.C

Roof Slope	Panel Span Rating			
	24/16	32/16	40/20	48/24
≤ 1:12	OK	OK	OK	OK
≤ 2:12	OK	OK	OK	OK
≤ 3:12	OK	OK	OK	OK
≤ 4:12	OK	OK	OK	OK
≤ 5:12	OK	OK	OK	OK
≤ 6:12	OK	OK	OK	OK
≤ 6:12	OK	OK	OK	OK
≤ 7:12	OK	OK	OK	OK
≤ 8:12	OK	OK	OK	OK
≤ 9:12	OK	OK	OK	OK
≤ 10:12	OK	OK	OK	OK
≤ 11:12	OK	OK	OK	OK
≤ 12:12	OK	OK	OK	OK
≤ 13:12	OK	OK	OK	OK
≤ 14:12	OK	OK	OK	OK

NOTE: SHADED AREA REQUIRE 2X LUMBER BLOCKING BETWEEN TRUSS AT UN SUPPORTED PANEL EDGES IN HIP ROOF AREAS

NOV 0 2 2006

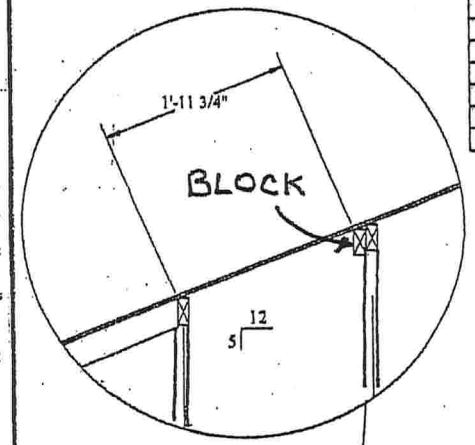

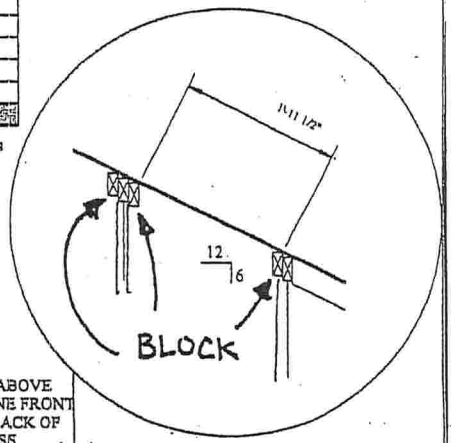

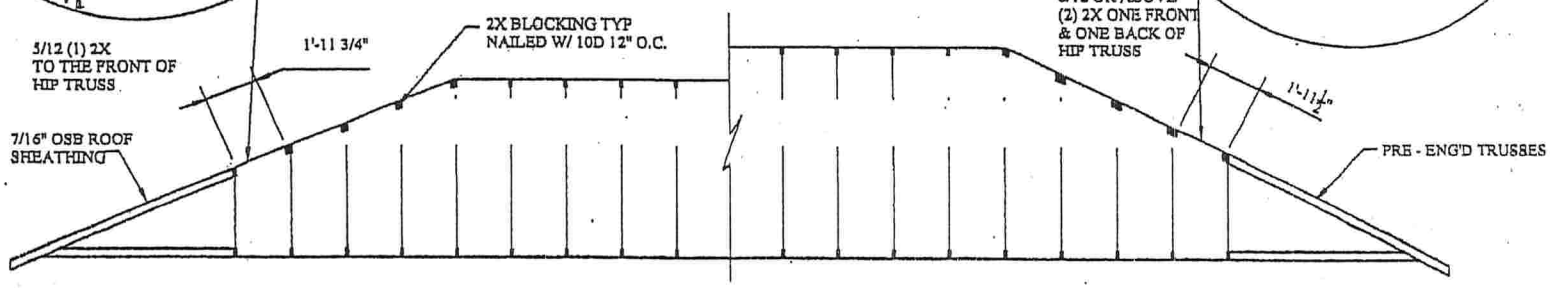

NOTE: NO BLOCKING IS REQUIRED ON 4/12 AND BELOW PITCHED ROOFS

Maronda Systems
4005 MARONDA WAY
Sanford, FL 32771
(407) 321-0064 Fax (407) 321-3913
TOMAS PONCE P.E. LICENSE #0050068
367 Medallion Pl. Chuluota, FL 32766

WARNING:

READ ALL NOTES ON THIS SHEET. A COPY OF THIS DRAWING TO BE GIVEN TO ERECTING CONTRACTOR. BRACING WARNING:

Bracing shown on this drawing is not erection bracing, wind bracing, portal bracing or similar bracing which is a part of the building design and which must be considered by the building designer. Bracing shown is for lateral support of truss members only to reduce buckling length. Provisions must be made to anchor lateral bracing at ends and specified locations determined by the building designer. Additional bracing of the overall structure may be required. (See HIB-91 of TPI). For specific truss bracing requirements, contact building designer. (Truss Plate Institute, TPI is located at 583 D'Onofrio Drive, Madison, Wisconsin 53719).

Component Engineering by: Truss Engineering Co., P.A., 818 Soundside Rd, Edenton, NC 27932

Eng Job:	WO: HIPDETAIL
Dwg:	TI: HIP
Dsgnr:TLY Chk:	11/2/2006
TC Live 16.0 psf	Lbr DF: 1.25
TC Dead 7.0 psf	Plt DF: 1.25
BC Live 10.0 psf	O.C.: 2- 0- 0
BC Dead 10.0 psf	TPI-02/FBC-04
TOTAL 43.0 psf	Code: FLA
	v4.7.32-0

ENGINEERING BY
TRENCO
A MiTek Affiliate

Trenco
818 Soundside Rd
Edenton, NC 27932

Re: AUSTIN
AUSTIN_FL_125

The truss drawing(s) referenced below have been prepared by Truss Engineering Co. under my direct supervision based on the parameters provided by Maronda Homes-Pittsburgh, PA.

Pages or sheets covered by this seal: E4595116 thru E4595121

My license renewal date for the state of Florida is February 28, 2009.

MARVIN A. STRZYZEWSKI
LICENSE
No 43144
STATE OF
FLORIDA
PROFESSIONAL ENGINEER

Marvin A. Strzyzewski, FL Lic. #43144
Truss Engineering Co.
818 Soundside Road
Edenton, NC 27932
FL COA #7239

January 4,2008

Strzyzewski, Marvin

The seal on these drawings indicate acceptance of professional engineering responsibility solely for the truss components shown. The suitability and use of this component for any particular building is the responsibility of the building designer, per ANSI/TPI-2002 Chapter 2.
Engineering services provided by Truss Engineering Company.

ENGINEERING BY
TRENCO
A MiTek Affiliate

Trenco
818 Soundside Rd
Edenton, NC 27932

Re: AUSTIN
AUSTIN_FL_125

The truss drawing(s) referenced below have been prepared by Truss Engineering Co. under my direct supervision based on the parameters provided by Maronda Homes-Pittsburgh, PA.

Pages or sheets covered by this seal: E4595116 thru E4595121

My license renewal date for the state of Florida is February 28, 2009.

MARVIN A. STRZYZEWSKI
LICENSE
No 43144
STATE OF
FLORIDA
PROFESSIONAL ENGINEER

Marvin A. Strzyzewski, FL Lic. #43144
Truss Engineering Co.
818 Soundside Road
Edenton, NC 27932
FL COA #7239

January 4,2008

Strzyzewski, Marvin

The seal on these drawings indicate acceptance of professional engineering responsibility solely for the truss components shown. The suitability and use of this component for any particular building is the responsibility of the building designer, per ANSI/TPI-2002 Chapter 2.
Engineering services provided by Truss Engineering Company.

Job	Truss	Truss Type	Qty	Ply	AUSTIN_FL_125
AUSTIN	S1	SPECIAL	12	1	E4530695 Job Reference (optional)

Maronda Homes Inc., Sanford, FL

7.020 s Nov 9 2007 MiTek Industries, Inc. Wed Nov 21 08:44:13 2007 Page 1

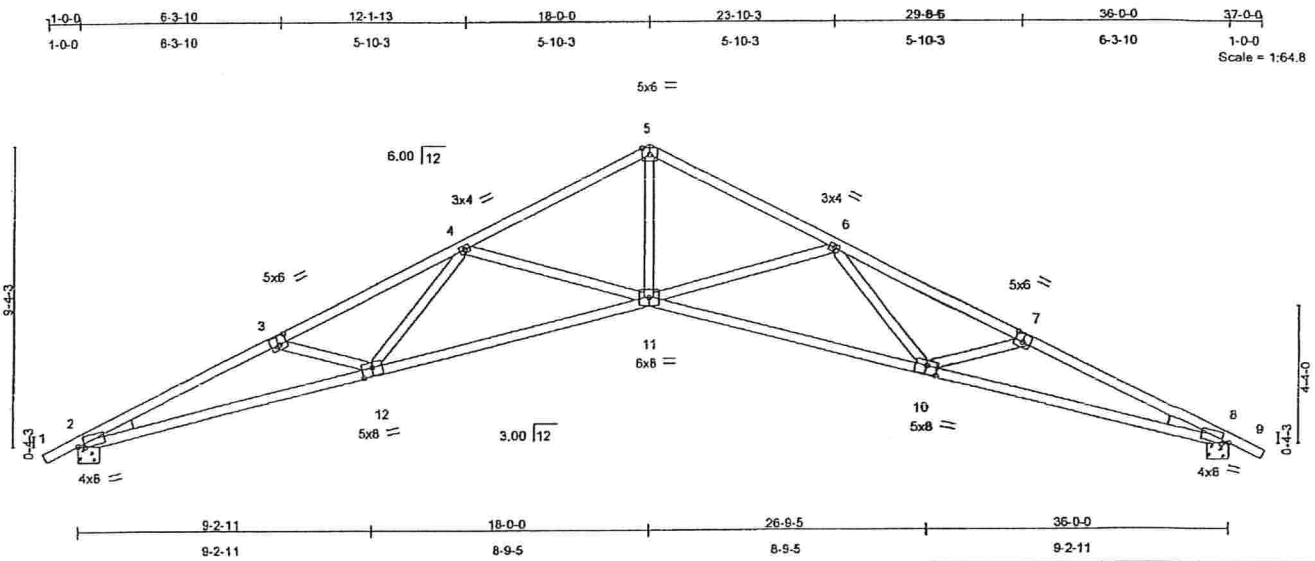

Plate Offsets (X,Y): [2:0-2-7,Edge], [3:0-3-0,0-3-0], [7:0-3-0,0-3-0], [8:0-2-7,Edge], [10:0-4-0,0-3-0], [12:0-4-0,0-3-0]

LOADING (psf)		SPACING	2-0-0	CSI		DEFL	In	(loc)	l/defl	L/d	PLATES	GRIP
TCLL	16.0	Plates Increase	1.25	TC	0.81	Vert(LL)	-0.57	11-12	>741	240	MT20	244/190
TCDL	7.0	Lumber Increase	1.25	BC	0.96	Vert(TL)	-1.16	11-12	>365	180		
BCLL	10.0	Rep Stress Incr	YES	WB	0.49	Horz(TL)	0.76	8	n/a	n/a		
BCDL	10.0	Code FBC2004/TPI2002		(Matrix)							Weight: 170 lb	

LUMBER
TOP CHORD 2 X 4 SYP No.2
BOT CHORD 2 X 4 SYP No.2 *Except*
2-12 2 X 4 SYP No.1D, 8-10 2 X 4 SYP No.1D
WEBS 2 X 4 SYP No.2
WEDGE
Left: 2 X 4 SYP No.3, Right: 2 X 4 SYP No.3

BRACING
TOP CHORD Structural wood sheathing directly applied or 2-2-0 oc purlins.
BOT CHORD Rigid ceiling directly applied or 2-2-0 oc bracing.

REACTIONS (lb/size) 2=1584/0-8-0, 8=1584/0-8-0
Max Horz 2=159(LC 6)
Max Uplift2=-368(LC 6), 8=-368(LC 7)

FORCES (lb) - Maximum Compression/Maximum Tension
TOP CHORD 1-2=0/18, 2-3=-4816/1406, 3-4=-4613/1228, 4-5=-3329/871, 5-6=-3329/871, 6-7=-4613/1228, 7-8=-4816/1406, 8-9=0/18
BOT CHORD 2-12=-1146/4365, 11-12=-822/3835, 10-11=-822/3835, 8-10=-1146/4365
WEBS 3-12=-151/288, 4-12=-71/690, 4-11=-820/434, 5-11=-546/2645, 6-11=-820/434, 6-10=-71/690, 7-10=-151/288

NOTES
1) Unbalanced roof live loads have been considered for this design.
2) Wind: ASCE 7-02; 125mph (3-second gust); h=25ft; TCDL=4.2psf; BCDL=6.0psf; Category II; Exp B; enclosed; MWFRS (low-rise) and C-C Interior(1) zone; Lumber DOL=1.60 plate grip DOL=1.60. This truss is designed for C-C for members and forces, and for MWFRS for reactions specified.
3) This truss has been designed for a 10.0 psf bottom chord live load nonconcurrent with any other live loads.
4) Bearing at joint(s) 2, 8 considers parallel to grain value using ANSI/TPI 1 angle to grain formula. Building designer should verify capacity of bearing surface.
5) Provide mechanical connection (by others) of truss to bearing plate capable of withstanding 368 lb uplift at joint 2 and 368 lb uplift at joint 8.

LOAD CASE(S) Standard

This document was originally issued by Lassiter, Frank on November 21,2007. This is not considered a sealed document. Official sealed drawings are available upon request from the manufacturer indicated above.

November 21,2007

ENGINEERING BY TRENCO
A MiTek Affiliate
818 Soundside Road
Edenton, NC 27932

Job	Truss	Truss Type	Qty	Ply	AUSTIN_FL_125
AUSTIN	S1S	SPECIAL	4	1	E4530888 Job Reference (optional)

Maronde Homes Inc., Sanford, FL — 7.020 s Nov 9 2007 MiTek Industries, Inc. Wed Nov 21 08:44:16 2007 Page 1

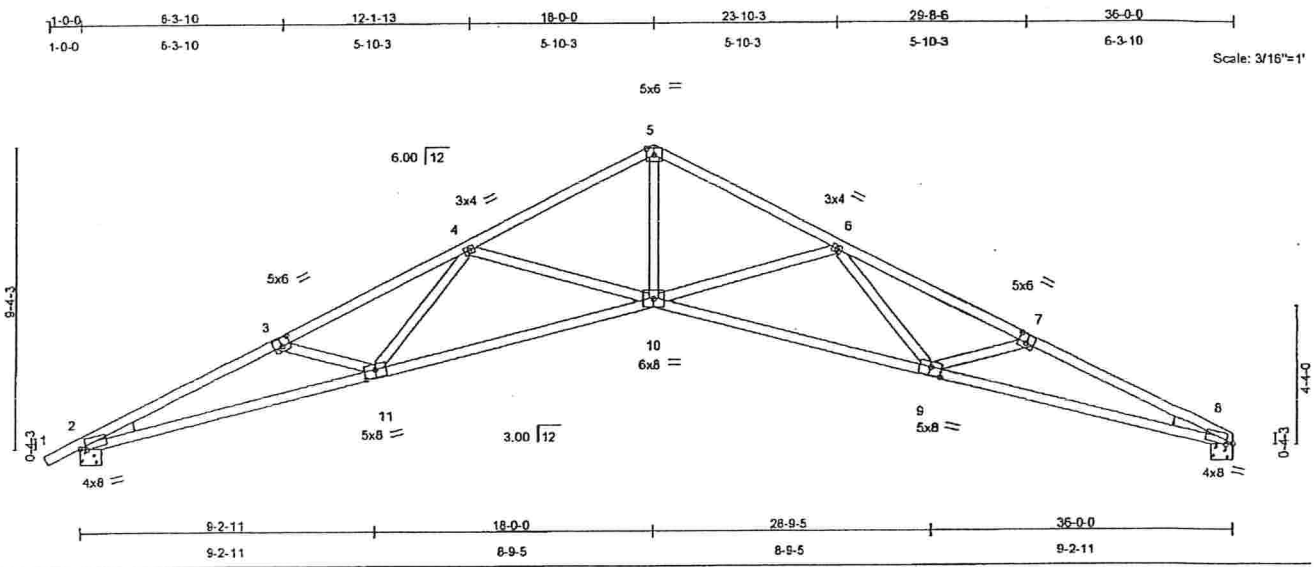

Plate Offsets (X,Y): [2:0-2-7,Edge], [3:0-3-0,0-3-0], [7:0-3-0,0-3-0], [8:0-2-7,Edge], [9:0-4-0,0-3-0], [11:0-4-0,0-3-0]

LOADING (psf)		SPACING	2-0-0	CSI		DEFL	In	(loc)	l/defl	L/d	PLATES	GRIP
TCLL	16.0	Plates Increase	1.25	TC	0.85	Vert(LL)	-0.57	10-11	>739	240	MT20	244/190
TCDL	7.0	Lumber Increase	1.25	BC	0.97	Vert(TL)	-1.16	10-11	>364	180		
BCLL	10.0	Rep Stress Incr	YES	WB	0.49	Horz(TL)	0.76	8	n/a	n/a		
BCDL	10.0	Code FBC2004/TPI2002		(Matrix)							Weight: 169 lb	

LUMBER
TOP CHORD 2 X 4 SYP No.2
BOT CHORD 2 X 4 SYP No.2 *Except*
2-11 2 X 4 SYP No.1D, 8-9 2 X 4 SYP No.1D
WEBS 2 X 4 SYP No.2
WEDGE
Left: 2 X 4 SYP No.3, Right: 2 X 4 SYP No.3

BRACING
TOP CHORD Structural wood sheathing directly applied or 2-1-0 oc purlins.
BOT CHORD Rigid ceiling directly applied or 2-2-0 oc bracing.

REACTIONS (lb/size) 8=1518/0-8-0, 2=1585/0-8-0
Max Horz 2=166(LC 6)
Max Uplift8=-286(LC 7), 2=-368(LC 6)

FORCES (lb) - Maximum Compression/Maximum Tension
TOP CHORD 1-2=0/18, 2-3=-4816/1457, 3-4=-4614/1282, 4-5=-3332/929, 5-6=-3332/928, 6-7=-4628/1313, 7-8=-4835/1499
BOT CHORD 2-11=-1237/4364, 10-11=-917/3837, 9-10=-929/3842, 8-9=-1280/4384
WEBS 3-11=-150/285, 4-11=-69/689, 4-10=-819/432, 5-10=-596/2648, 6-10=-824/444, 6-9=-94/700, 7-9=-157/301

NOTES
1) Unbalanced roof live loads have been considered for this design.
2) Wind: ASCE 7-02; 125mph (3-second gust); h=25ft; TCDL=4.2psf; BCDL=6.0psf; Category II; Exp B; enclosed; MWFRS (low-rise) and C-C Interior(1) zone; Lumber DOL=1.60 plate grip DOL=1.60. This truss is designed for C-C for members and forces, and for MWFRS for reactions specified.
3) This truss has been designed for a 10.0 psf bottom chord live load nonconcurrent with any other live loads.
4) Bearing at joint(s) 8, 2 considers parallel to grain value using ANSI/TPI 1 angle to grain formula. Building designer should verify capacity of bearing surface.
5) Provide mechanical connection (by others) of truss to bearing plate capable of withstanding 286 lb uplift at joint 8 and 368 lb uplift at joint 2.

LOAD CASE(S) Standard

This document was originally issued by Lassiter, Frank on November 21,2007. This is not considered a sealed document. Official sealed drawings are available upon request from the manufacturer indicated above.
November 21,2007

ENGINEERING BY TRENCO
A MiTek Affiliate
818 Soundside Road
Edenton, NC 27932

Job	Truss	Truss Type	Qty	Ply	AUSTIN_FL_125
AUSTIN	H1	HIP	1	1	E4530649 Job Reference (optional)

Maronda Homes Inc., Sanford, FL — 7.020 s Nov 9 2007 MiTek Industries, Inc. Wed Nov 21 08:43:48 2007 Page 1

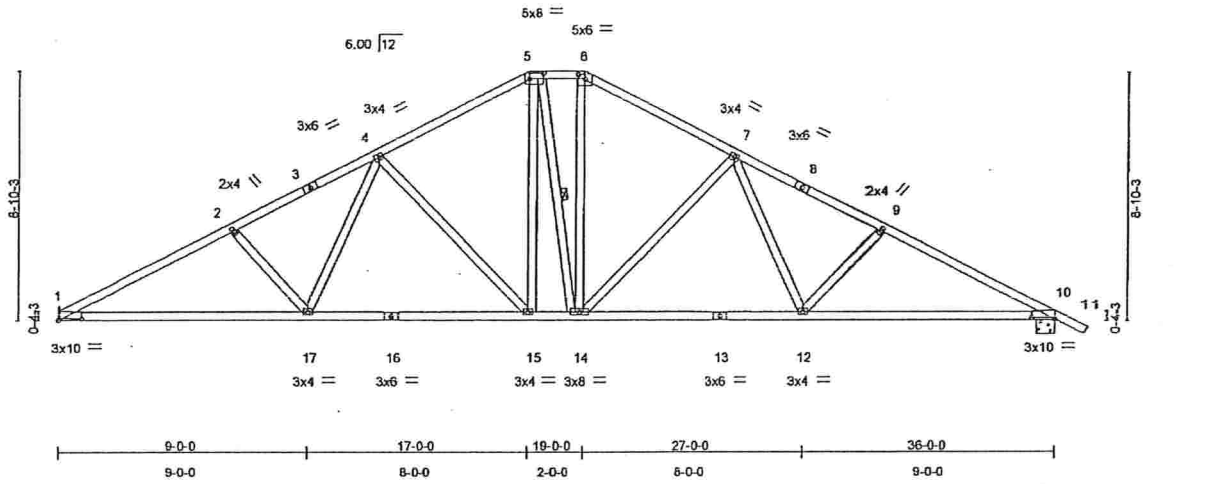

Plate Offsets (X,Y): [1:0-10-0,0-0-10], [5:0-6-0,0-2-8], [6:0-3-0,0-2-0], [10:0-10-0,0-0-10]

LOADING (psf)		SPACING 2-0-0		CSI		DEFL	in	(loc)	l/defl	L/d	PLATES	GRIP
TCLL	16.0	Plates Increase	1.25	TC	0.53	Vert(LL)	-0.23	1-17	>999	240	MT20	244/190
TCDL	7.0	Lumber Increase	1.25	BC	0.82	Vert(TL)	-0.51	1-17	>840	180		
BCLL	10.0	Rep Stress Incr	YES	WB	0.66	Horz(TL)	0.14	10	n/a	n/a		
BCDL	10.0	Code FBC2004/TPI2002		(Matrix)							Weight: 205 lb	

LUMBER
TOP CHORD 2 X 4 SYP No.2
BOT CHORD 2 X 4 SYP No.2
WEBS 2 X 4 SYP No.2

BRACING
TOP CHORD Structural wood sheathing directly applied or 3-1-2 oc purlins.
BOT CHORD Rigid ceiling directly applied or 7-4-14 oc bracing.
WEBS 1 Row at midpt 5-14

REACTIONS (lb/size) 1=1530/Mechanical, 10=1597/0-8-0
Max Horz 1=-163(LC 7)
Max Uplift1=-284(LC 6), 10=-379(LC 7)

FORCES (lb) - Maximum Compression/Maximum Tension
TOP CHORD 1-2=-2831/921, 2-3=-2646/854, 3-4=-2547/872, 4-5=-1850/713, 5-6=-1616/693, 6-7=-1852/714, 7-8=-2481/835, 8-9=-2580/825, 9-10=-2744/872, 10-11=0/21
BOT CHORD 1-17=-686/2491, 16-17=-468/2060, 15-16=-468/2060, 14-15=-242/1612, 13-14=-453/2030, 12-13=-453/2030, 10-12=-630/2389
WEBS 2-17=-271/263, 4-17=-105/640, 4-15=-659/329, 5-15=-174/634, 5-14=-143/172, 6-14=-169/618, 7-14=-614/307, 7-12=-65/574, 9-12=-209/226

NOTES
1) Unbalanced roof live loads have been considered for this design.
2) Wind: ASCE 7-02; 125mph (3-second gust); h=25ft; TCDL=4.2psf; BCDL=6.0psf; Category II; Exp B; enclosed; MWFRS (low-rise) and C-C Interior(1) zone; Lumber DOL=1.60 plate grip DOL=1.60. This truss is designed for C-C for members and forces, and for MWFRS for reactions specified.
3) Provide adequate drainage to prevent water ponding.
4) This truss has been designed for a 10.0 psf bottom chord live load nonconcurrent with any other live loads.
5) Refer to girder(s) for truss to truss connections.
6) Provide mechanical connection (by others) of truss to bearing plate capable of withstanding 284 lb uplift at joint 1 and 379 lb uplift at joint 10.

LOAD CASE(S) Standard

This document was originally issued by Lassiter, Frank on November 21,2007. This is not considered a sealed document. Official sealed drawings are available upon request from the manufacturer indicated above.

November 21,2007

ENGINEERING BY TRENCO A MiTek Affiliate
818 Soundside Road
Edenton, NC 27932

Job	Truss	Truss Type	Qty	Ply	AUSTIN_FL_125
AUSTIN	H2	HIP	1	1	E4530650 Job Reference (optional)

Maronda Homes Inc., Sanford, FL — 7.020 s Nov 9 2007 MiTek Industries, Inc. Wed Nov 21 08:43:49 2007 Page 1

6-3-7	10-2-2	15-0-0	21-0-0	25-9-14	29-8-9	36-0-0	37-0-0
6-3-7	3-10-11	4-9-14	6-0-0	4-9-14	3-10-11	6-3-7	1-0-0

Scale: 3/16"=1'

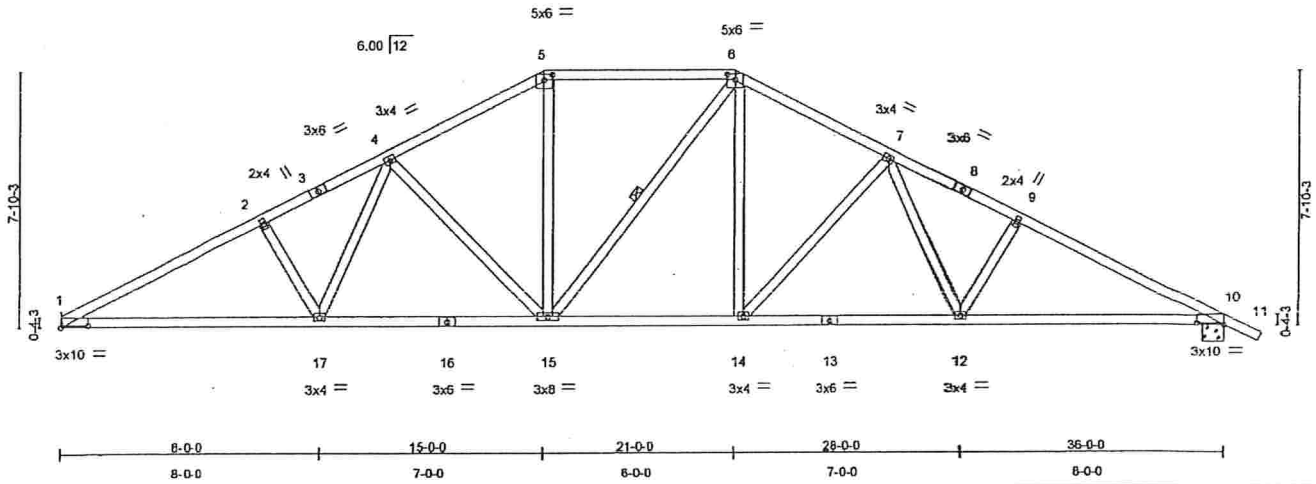

Plate Offsets (X,Y): [1:0-10-0,0-0-10], [5:0-3-0,0-2-0], [6:0-3-0,0-2-0], [10:0-10-0,0-0-10]

LOADING (psf)		SPACING 2-0-0		CSI		DEFL	in	(loc)	l/defl	L/d	PLATES	GRIP
TCLL	16.0	Plates Increase	1.25	TC	0.50	Vert(LL)	-0.19	1-17	>999	240	MT20	244/190
TCDL	7.0	Lumber Increase	1.25	BC	0.72	Vert(TL)	-0.40	1-17	>999	180		
BCLL	10.0	Rep Stress Incr	YES	WB	0.43	Horz(TL)	0.14	10	n/a	n/a		
BCDL	10.0	Code FBC2004/TPI2002		(Matrix)							Weight: 195 lb	

LUMBER
TOP CHORD 2 X 4 SYP No.2
BOT CHORD 2 X 4 SYP No.2
WEBS 2 X 4 SYP No.2

BRACING
TOP CHORD Structural wood sheathing directly applied or 3-1-13 oc purlins.
BOT CHORD Rigid ceiling directly applied or 7-4-3 oc bracing.
WEBS 1 Row at midpt 6-15

REACTIONS (lb/size) 1=1530/Mechanical, 10=1597/0-8-0
Max Horz 1=-147(LC 7)
Max Uplift1=-271(LC 6), 10=-350(LC 7)

FORCES (lb) - Maximum Compression/Maximum Tension
TOP CHORD 1-2=-2854/931, 2-3=-2727/921, 3-4=-2654/935, 4-5=-2033/772, 5-6=-1793/746, 6-7=-2043/774, 7-8=-2571/888, 8-9=-2644/875, 9-10=-2765/881, 10-11=0/21
BOT CHORD 1-17=-694/2507, 16-17=-526/2162, 15-16=-526/2162, 14-15=-338/1776, 13-14=-505/2123, 12-13=-505/2123, 10-12=-636/2403
WEBS 2-17=-237/235, 4-17=-132/591, 4-15=-548/268, 5-15=-109/624, 6-15=-108/156, 6-14=-108/611, 7-14=-498/244, 7-12=-87/513, 9-12=-174/196

NOTES
1) Unbalanced roof live loads have been considered for this design.
2) Wind: ASCE 7-02; 125mph (3-second gust); h=25ft; TCDL=4.2psf; BCDL=6.0psf; Category II; Exp B; enclosed; MWFRS (low-rise) and C-C Interior(1) zone; Lumber DOL=1.60 plate grip DOL=1.60. This truss is designed for C-C for members and forces, and for MWFRS for reactions specified.
3) Provide adequate drainage to prevent water ponding.
4) This truss has been designed for a 10.0 psf bottom chord live load nonconcurrent with any other live loads.
5) Refer to girder(s) for truss to truss connections.
6) Provide mechanical connection (by others) of truss to bearing plate capable of withstanding 271 lb uplift at joint 1 and 350 lb uplift at joint 10.

LOAD CASE(S) Standard

This document was originally issued by Lassiter, Frank on November 21,2007. This is not considered a sealed document. Official sealed drawings are available upon request from the manufacturer indicated above.

November 21,2007

ENGINEERING BY TRENCO
A MiTek Affiliate
818 Soundside Road
Edenton, NC 27932

Job	Truss	Truss Type	Qty	Ply	AUSTIN_FL_125
AUSTIN	H3	HIP	1	1	E4530651 Job Reference (optional)

Maronda Homes Inc., Sanford, FL — 7.020 s Nov 9 2007 MiTek Industries, Inc. Wed Nov 21 08:43:50 2007 Page 1

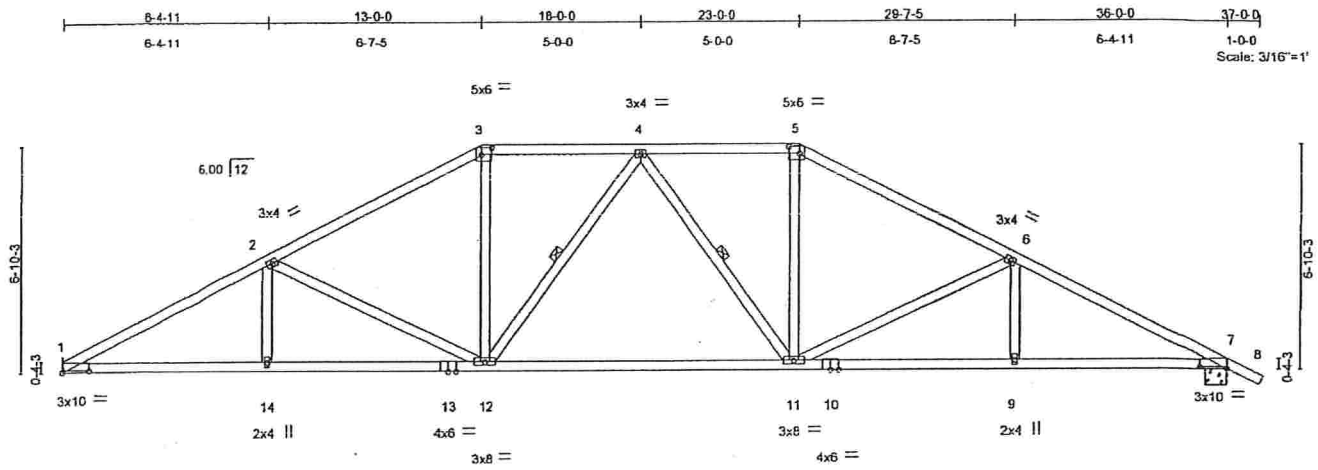

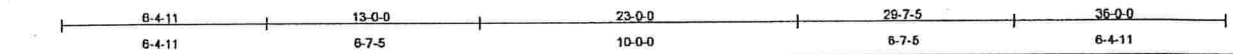

Plate Offsets (X,Y): [1:0-10-0,0-0-10], [3:0-4-0,0-2-8], [5:0-4-0,0-2-8], [7:0-10-0,0-0-10]

LOADING (psf)		SPACING	2-0-0	CSI		DEFL	in	(loc)	l/defl	L/d	PLATES	GRIP
TCLL	16.0	Plates Increase	1.25	TC	0.35	Vert(LL)	-0.29	11-12	>999	240	MT20	244/190
TCDL	7.0	Lumber Increase	1.25	BC	0.69	Vert(TL)	-0.64	11-12	>669	180		
BCLL	10.0	Rep Stress Incr	YES	WB	0.54	Horz(TL)	0.13	7	n/a	n/a		
BCDL	10.0	Code FBC2004/TPI2002		(Matrix)							Weight: 186 lb	

LUMBER
TOP CHORD 2 X 4 SYP No.2
BOT CHORD 2 X 4 SYP No.1D
WEBS 2 X 4 SYP No.2

BRACING
TOP CHORD Structural wood sheathing directly applied or 3-4-13 oc purlins.
BOT CHORD Rigid ceiling directly applied or 7-8-14 oc bracing.
WEBS 1 Row at midpt 4-12, 4-11

REACTIONS (lb/size) 1=1530/Mechanical, 7=1597/0-8-0
Max Horz 1=-132(LC 7)
Max Uplift1=-255(LC 6), 7=-334(LC 7)

FORCES (lb) - Maximum Compression/Maximum Tension
TOP CHORD 1-2=-2907/954, 2-3=-2280/813, 3-4=-1992/793, 4-5=-1974/784, 5-6=-2260/802, 6-7=-2833/901, 7-8=0/21
BOT CHORD 1-14=-717/2552, 13-14=-717/2552, 12-13=-717/2552, 11-12=-495/2053, 10-11=-658/2450, 9-10=-658/2450, 7-9=-658/2450
WEBS 2-14=0/262, 2-12=-642/315, 3-12=-110/709, 4-12=-219/165, 4-11=-245/168, 5-11=-101/697, 6-11=-553/260, 6-9=0/247

NOTES
1) Unbalanced roof live loads have been considered for this design.
2) Wind: ASCE 7-02; 125mph (3-second gust); h=25ft; TCDL=4.2psf; BCDL=6.0psf; Category II; Exp B; enclosed; MWFRS (low-rise) and C-C Interior(1) zone; Lumber DOL=1.60 plate grip DOL=1.60. This truss is designed for C-C for members and forces, and for MWFRS for reactions specified.
3) Provide adequate drainage to prevent water ponding.
4) This truss has been designed for a 10.0 psf bottom chord live load nonconcurrent with any other live loads.
5) Refer to girder(s) for truss to truss connections.
6) Provide mechanical connection (by others) of truss to bearing plate capable of withstanding 255 lb uplift at joint 1 and 334 lb uplift at joint 7.

LOAD CASE(S) Standard

This document was originally issued by Lassiter, Frank on November 21,2007. This is not considered a sealed document. Official sealed drawings are available upon request from the manufacturer indicated above.
November 21,2007

ENGINEERING BY TRENCO A MiTek Affiliate
818 Soundside Road
Edenton, NC 27932

Job	Truss	Truss Type	Qty	Ply	AUSTIN_FL_125
AUSTIN	H4	HIP	1	1	E4530652 Job Reference (optional)

Maronda Homes Inc., Sanford, FL — 7.020 s Nov 9 2007 MiTek Industries, Inc. Wed Nov 21 08:43:50 2007 Page 1

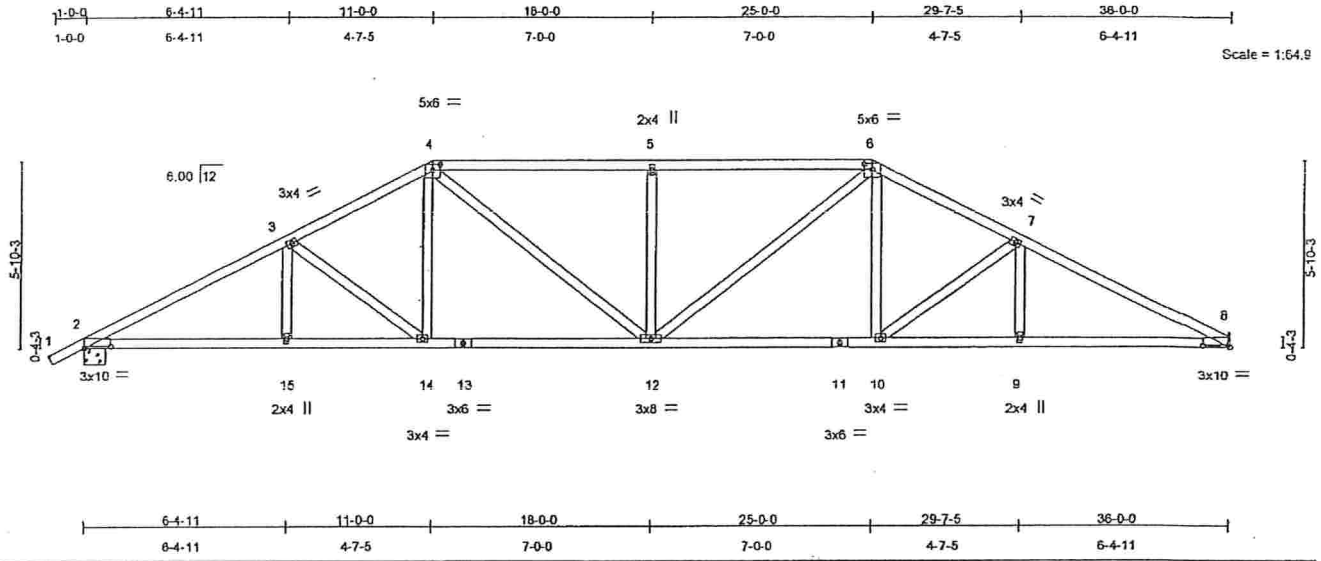

Plate Offsets (X,Y): [2:0-10-0,0-0-10], [4:0-3-0,0-2-0], [6:0-3-0,0-2-0], [8:0-10-0,0-0-10]

LOADING (psf)		SPACING 2-0-0		CSI		DEFL	in	(loc)	l/defl	L/d	PLATES	GRIP
TCLL	16.0	Plates Increase	1.25	TC	0.38	Vert(LL)	-0.22	10-12	>999	240	MT20	244/190
TCDL	7.0	Lumber Increase	1.25	BC	0.73	Vert(TL)	-0.45	10-12	>960	180		
BCLL	10.0	Rep Stress Incr	YES	WB	0.24	Horz(TL)	-0.14	2	n/a	n/a		
BCDL	10.0	Code FBC2004/TPI2002		(Matrix)							Weight: 186 lb	

LUMBER
TOP CHORD 2 X 4 SYP No.2
BOT CHORD 2 X 4 SYP No.2
WEBS 2 X 4 SYP No.2

BRACING
TOP CHORD Structural wood sheathing directly applied or 3-4-6 oc purlins.
BOT CHORD Rigid ceiling directly applied or 7-2-0 oc bracing.

REACTIONS (lb/size) 8=1530/Mechanical, 2=1597/0-8-0
Max Horz 8=117(LC 6)
Max Uplift8=-238(LC 7), 2=-316(LC 6)

FORCES (lb) - Maximum Compression/Maximum Tension
TOP CHORD 1-2=0/21, 2-3=-2814/909, 3-4=-2405/875, 4-5=-2520/979, 5-6=-2520/979, 6-7=-2443/896, 7-8=-2890/964
BOT CHORD 2-15=-660/2429, 14-15=-660/2429, 13-14=-518/2097, 12-13=-518/2097, 11-12=-534/2128, 10-11=-534/2128, 9-10=-721/2533, 8-9=-721/2533
WEBS 3-15=0/219, 3-14=-400/179, 4-14=-35/462, 4-12=-192/625, 5-12=-342/319, 6-12=-180/590, 6-10=-63/506, 7-10=-486/229, 7-9=0/236

NOTES
1) Unbalanced roof live loads have been considered for this design.
2) Wind: ASCE 7-02; 125mph (3-second gust); h=25ft; TCDL=4.2psf; BCDL=6.0psf; Category II; Exp B; enclosed; MWFRS (low-rise) and C-C Interior(1) zone; Lumber DOL=1.60 plate grip DOL=1.60. This truss is designed for C-C for members and forces, and for MWFRS for reactions specified.
3) Provide adequate drainage to prevent water ponding.
4) This truss has been designed for a 10.0 psf bottom chord live load nonconcurrent with any other live loads.
5) Refer to girder(s) for truss to truss connections.
6) Provide mechanical connection (by others) of truss to bearing plate capable of withstanding 238 lb uplift at joint 8 and 316 lb uplift at joint 2.

LOAD CASE(S) Standard

This document was originally issued by Lassiter, Frank on November 21,2007. This is not considered a sealed document. Official sealed drawings are available upon request from the manufacturer indicated above.
November 21,2007

ENGINEERING BY TRENCO
A MiTek Affiliate
818 Soundside Road
Edenton, NC 27932

Job	Truss	Truss Type	Qty	Ply	AUSTIN_FL_125
AUSTIN	MH4	SPECIAL	1	1	E4530692 Job Reference (optional)

Maronda Homes Inc., Sanford, FL — 7.020 s Nov 9 2007 MiTek Industries, Inc. Wed Nov 21 08:44:11 2007 Page 1

1-0-0	4-9-4	9-0-0	15-8-2	22-4-4	29-0-6	36-0-0
1-0-0	4-9-4	4-2-12	6-8-2	6-8-2	6-8-2	6-11-10

Scale = 1:65.1

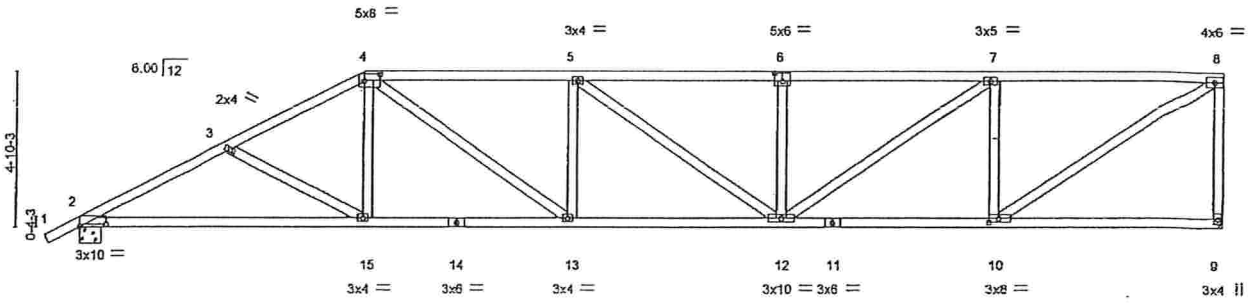

9-0-0	15-8-2	22-4-4	29-0-6	36-0-0
9-0-0	6-8-2	6-8-2	6-8-2	6-11-10

Plate Offsets (X,Y): [2:0-10-0,0-0-14], [4:0-6-0,0-2-8], [6:0-3-0,0-3-0], [10:0-3-8,0-1-8]

LOADING (psf)		SPACING	2-0-0	CSI		DEFL	in	(loc)	l/defl	L/d	PLATES	GRIP
TCLL	16.0	Plates Increase	1.25	TC	0.85	Vert(LL)	-0.24	12-13	>999	240	MT20	244/190
TCDL	7.0	Lumber Increase	1.25	BC	0.82	Vert(TL)	-0.49	12-13	>866	180		
BCLL	10.0	Rep Stress Incr	YES	WB	0.82	Horz(TL)	-0.12	2	n/a	n/a		
BCDL	10.0	Code FBC2004/TPI2002		(Matrix)							Weight: 195 lb	

LUMBER
TOP CHORD 2 X 4 SYP No.2
BOT CHORD 2 X 4 SYP No.2
WEBS 2 X 4 SYP No.2

BRACING
TOP CHORD Structural wood sheathing directly applied or 3-5-3 oc purlins, except end verticals.
BOT CHORD Rigid ceiling directly applied or 6-10-14 oc bracing.

REACTIONS (lb/size) 9=1526/Mechanical, 2=1593/0-8-0
Max Horz 9=221(LC 6)
Max Uplift9=-370(LC 5), 2=-296(LC 5)

FORCES (lb) - Maximum Compression/Maximum Tension
TOP CHORD 1-2=0/21, 2-3=-2733/947, 3-4=-2573/880, 4-5=-2978/1107, 5-6=-2867/1052, 6-7=-2867/1052, 7-8=-1917/702, 8-9=-1391/589
BOT CHORD 2-15=-704/2382, 14-15=-575/2276, 13-14=-575/2276, 12-13=-843/2978, 11-12=-437/1917, 10-11=-437/1917, 9-10=0/242
WEBS 3-15=-133/171, 4-15=0/394, 4-13=-324/849, 5-13=-237/255, 5-12=-134/67, 6-12=-302/280, 7-12=-424/1150, 7-10=-966/545, 8-10=-817/2230

NOTES
1) Wind: ASCE 7-02; 125mph (3-second gust); h=25ft; TCDL=4.2psf; BCDL=6.0psf; Category II; Exp B; enclosed; MWFRS (low-rise) and C-C Interior(1) zone; Lumber DOL=1.60 plate grip DOL=1.60. This truss is designed for C-C for members and forces, and for MWFRS for reactions specified.
2) Provide adequate drainage to prevent water ponding.
3) This truss has been designed for a 10.0 psf bottom chord live load nonconcurrent with any other live loads.
4) Refer to girder(s) for truss to truss connections.
5) Provide mechanical connection (by others) of truss to bearing plate capable of withstanding 370 lb uplift at joint 9 and 296 lb uplift at joint 2.

LOAD CASE(S) Standard

This document was originally issued by Lassiter, Frank on November 21,2007. This is not considered a sealed document. Official sealed drawings are available upon request from the manufacturer indicated above.

November 21,2007

ENGINEERING BY TRENCO
A MiTek Affiliate
818 Soundside Road
Edenton, NC 27932

Job	Truss	Truss Type	Qty	Ply	AUSTIN_FL_125
AUSTIN	MHGRD1	SPECIAL	1	2	E4530693 Job Reference (optional)

Maronda Homes Inc., Sanford, FL — 7.020 s Nov 9 2007 MiTek Industries, Inc. Wed Nov 21 08:44:12 2007 Page 1

1-0-0 | 3-11-4 | 7-0-0 | 14-3-14 | 21-6-0 | 28-8-2 | 36-0-0

1-0-0 | 3-11-4 | 3-0-12 | 7-3-14 | 7-2-2 | 7-2-2 | 7-3-14

Scale = 1:65.4

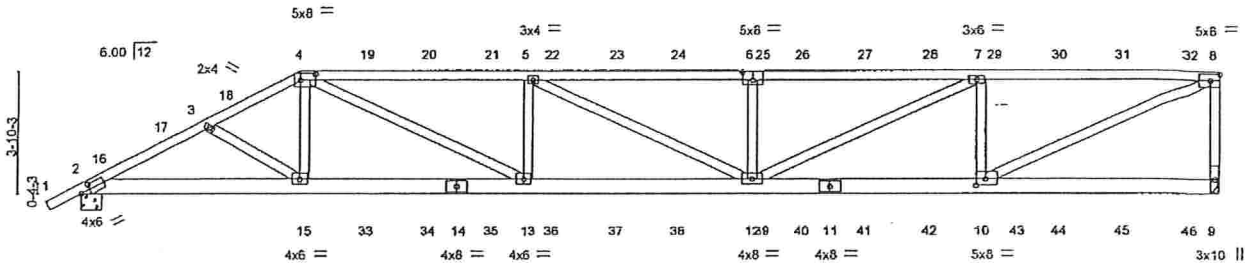

3-11-4 | 7-0-0 | 14-3-14 | 21-6-0 | 28-8-2 | 36-0-0

3-11-4 | 3-0-12 | 7-3-14 | 7-2-2 | 7-2-2 | 7-3-14

Plate Offsets (X,Y): [2:0-3-10,0-2-0], [4:0-5-8,0-2-4], [6:0-4-0,0-3-0], [10:0-3-8,0-2-8]

LOADING (psf)		SPACING	2-0-0	CSI		DEFL	In	(loc)	l/defl	L/d	PLATES	GRIP
TCLL	16.0	Plates Increase	1.25	TC	0.73	Vert(LL)	0.41	12-13	>999	240	MT20	244/190
TCDL	7.0	Lumber Increase	1.25	BC	0.71	Vert(TL)	-0.70	12-13	>605	180		
BCLL	10.0	Rep Stress Incr	NO	WB	0.73	Horz(TL)	-0.10	2	n/a	n/a		
BCDL	10.0	Code FBC2004/TPI2002		(Matrix)							Weight: 428 lb	

LUMBER
TOP CHORD 2 X 4 SYP No.2
BOT CHORD 2 X 6 SYP No.2
WEBS 2 X 4 SYP No.2

BRACING
TOP CHORD Structural wood sheathing directly applied or 3-9-12 oc purlins, except end verticals.
BOT CHORD Rigid ceiling directly applied or 8-0-0 oc bracing.

REACTIONS (lb/size) 9=3456/Mechanical, 2=3341/0-8-0
Max Horz 9=181(LC 5)
Max Uplift9=-1881(LC 7), 2=-1885(LC 8)

FORCES (lb) - Maximum Compression/Maximum Tension
TOP CHORD 1-2=0/25, 2-16=-6512/3586, 16-17=-6456/3503, 3-17=-6444/3424, 3-18=-6568/3513, 4-18=-6510/3523, 4-19=-8802/4793, 19-20=-8802/4793, 20-21=-8801/4792, 5-21=-8801/4792, 5-22=-8720/4742, 22-23=-8720/4742, 23-24=-8720/4742, 24-25=-8720/4742, 6-25=-8720/4742, 6-26=-8720/4742, 26-27=-8720/4742, 27-28=-8720/4742, 7-28=-8720/4742, 7-29=-5894/3288, 29-30=-5894/3288, 30-31=-5894/3288, 31-32=-5894/3288, 8-32=-5894/3288, 8-9=-3127/1878
BOT CHORD 2-15=-3023/5685, 15-33=-3059/5940, 33-34=-3059/5940, 14-34=-3059/5940, 14-35=-3059/5940, 13-35=-3059/5940, 13-36=-4611/8801, 36-37=-4611/8801, 37-38=-4611/8801, 38-39=-4611/8801, 12-39=-4611/8801, 12-40=-3172/5894, 11-40=-3172/5894, 11-41=-3172/5894, 41-42=-3172/5894, 10-42=-3172/5894, 10-43=-86/217, 43-44=-86/217, 44-45=-86/217, 45-46=-86/217, 9-46=-86/217
WEBS 3-15=-285/250, 4-15=-189/957, 4-13=-1829/3166, 5-13=-724/874, 5-12=-90/74, 6-12=-733/859, 7-12=-1718/3140, 7-10=-2127/1602, 8-10=-3605/6306

NOTES
1) 2-ply truss to be connected together with 10d (0.131"x3") nails as follows:
Top chords connected as follows: 2 X 4 - 1 row at 0-7-0 oc.
Bottom chords connected as follows: 2 X 6 - 2 rows at 0-9-0 oc.
Webs connected as follows: 2 X 4 - 1 row at 0-9-0 oc.
2) All loads are considered equally applied to all plies, except if noted as front (F) or back (B) face in the LOAD CASE(S) section. Ply to ply connections have been provided to distribute only loads noted as (F) or (B), unless otherwise indicated.
3) Wind: ASCE 7-02; 125mph (3-second gust); h=25ft; TCDL=4.2psf; BCDL=6.0psf; Category II; Exp B; enclosed; MWFRS (low-rise); Lumber DOL=1.60 plate grip DOL=1.60.
4) Provide adequate drainage to prevent water ponding.
5) This truss has been designed for a 10.0 psf bottom chord live load nonconcurrent with any other live loads.
6) Refer to girder(s) for truss to truss connections.
7) Provide mechanical connection (by others) of truss to bearing plate capable of withstanding 1881 lb uplift at joint 9 and 1885 lb uplift at joint 2.

Continued on page 2

This document was originally issued by Lassiter, Frank on November 21,2007. This is not considered a sealed document. Official sealed drawings are available upon request from the manufacturer indicated above.
November 21,2007

ENGINEERING BY TRENCO A MiTek Affiliate
818 Soundside Road
Edenton, NC 27932

NOTES

8) Hanger(s) or other connection device(s) shall be provided sufficient to support concentrated load(s) 116 lb down and 194 lb up at 35-0-12, 116 lb down and 194 lb up at 33-0-12, 116 lb down and 194 lb up at 31-0-12, 116 lb down and 194 lb up at 29-0-12, 116 lb down and 194 lb up at 27-0-12, 116 lb down and 194 lb up at 25-0-12, 116 lb down and 194 lb up at 23-0-12, 116 lb down and 194 lb up at 21-0-12, 116 lb down and 194 lb up at 19-0-12, 116 lb down and 194 lb up at 17-0-12, 116 lb down and 194 lb up at 15-0-12, 116 lb down and 194 lb up at 13-0-12, 116 lb down and 194 lb up at 11-0-12, 116 lb down and 194 lb up at 9-0-12, 116 lb down and 194 lb up at 7-0-0, 194 lb up at 0-11-4, 194 lb up at 2-11-4, 194 lb up at 4-11-4, 194 lb up at 7-0-0, 194 lb up at 8-11-4, 194 lb up at 10-11-4, 194 lb up at 12-11-4, 194 lb up at 14-11-4, 194 lb up at 16-11-4, 194 lb up at 18-11-4, 194 lb up at 20-11-4, 194 lb up at 22-11-4, 194 lb up at 24-11-4, and 194 lb up at 26-11-4, and 194 lb up at 28-11-4 on top chord, and 92 lb down at 35-0-12, 92 lb down at 33-0-12, 92 lb down at 31-0-12, 92 lb down at 29-0-12, 92 lb down at 27-0-12, 92 lb down at 25-0-12, 92 lb down at 23-0-12, 92 lb down at 21-0-12, 92 lb down at 19-0-12, 92 lb down at 17-0-12, 92 lb down at 15-0-12, 92 lb down at 13-0-12, 92 lb down at 11-0-12, 92 lb down at 9-0-12, and 644 lb down and 345 lb up at 7-0-12, and 345 lb up at 29-0-0 on bottom chord. The design/selection of such connection device(s) is the responsibility of others.

LOAD CASE(S) Standard

1) Regular: Lumber Increase=1.25, Plate Increase=1.25

Uniform Loads (plf)

Vert: 1-4=-46, 4-8=-46, 2-9=-40

Concentrated Loads (lb)

Vert: 4=-116(B) 15=-644(B) 19=-116(B) 20=-116(B) 21=-116(B) 22=-116(B) 23=-116(B) 24=-116(B) 25=-116(B) 26=-116(B) 27=-116(B) 28=-116(B) 29=-116(B) 30=-116(B) 31=-116(B) 32=-116(B) 33=-92(B) 34=-92(B) 35=-92(B) 36=-92(B) 37=-92(B) 38=-92(B) 39=-92(B) 40=-92(B) 41=-92(B) 42=-92(B) 43=-92(B) 44=-92(B) 45=-92(B) 46=-92(B)

Job	Truss	Truss Type	Qty	Ply	AUSTIN_FL_125
AUSTIN	HS1	SPECIAL	1	1	E4530661 Job Reference (optional)

Maronda Homes Inc., Sanford, FL — 7.020 s Nov 9 2007 MiTek Industries, Inc. Wed Nov 21 08:43:57 2007 Page 1

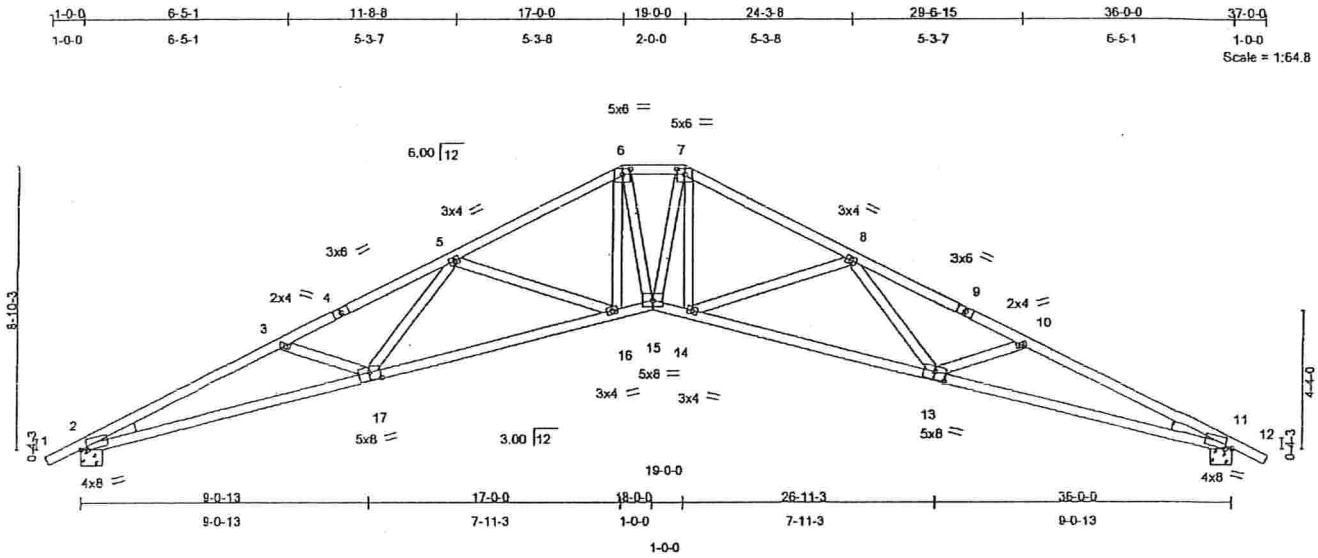

Plate Offsets (X,Y): [2:0-2-7,Edge], [6:0-3-0,0-2-0], [7:0-3-0,0-2-0], [11:0-2-7,Edge], [13:0-4-0,0-3-0], [17:0-4-0,0-3-0]

LOADING (psf)		SPACING	2-0-0	CSI		DEFL	In	(loc)	l/defl	L/d	PLATES	GRIP
TCLL	16.0	Plates Increase	1.25	TC	0.81	Vert(LL)	-0.53	13-14	>797	240	MT20	244/190
TCDL	7.0	Lumber Increase	1.25	BC	0.94	Vert(TL)	-1.07	13-14	>395	180		
BCLL	10.0	Rep Stress Incr	YES	WB	0.35	Horz(TL)	0.74	11	n/a	n/a		
BCDL	10.0	Code FBC2004/TPI2002		(Matrix)							Weight: 184 lb	

LUMBER
TOP CHORD 2 X 4 SYP No.2
BOT CHORD 2 X 4 SYP No.2 "Except"
2-17 2 X 4 SYP No.1D, 11-13 2 X 4 SYP No.1D
WEBS 2 X 4 SYP No.2
WEDGE
Left: 2 X 4 SYP No.3, Right: 2 X 4 SYP No.3

BRACING
TOP CHORD Structural wood sheathing directly applied or 2-2-0 oc purlins.
BOT CHORD Rigid ceiling directly applied or 2-2-0 oc bracing.

REACTIONS (lb/size) 2=1584/0-8-0, 11=1584/0-8-0
Max Horz 2=-151(LC 7)
Max Uplift2=-362(LC 6), 11=-377(LC 7)

FORCES (lb) - Maximum Compression/Maximum Tension
TOP CHORD 1-2=0/18, 2-3=-4810/1417, 3-4=-4623/1245, 4-5=-4566/1259, 5-6=-3474/948, 6-7=-3170/930, 7-8=-3482/950, 8-9=-4566/1259, 9-10=-4623/1245, 10-11=-4810/1417, 11-12=0/18
BOT CHORD 2-17=-1155/4357, 16-17=-861/3890, 15-16=-473/3076, 14-15=-476/3088, 13-14=-861/3890, 11-13=-1155/4357
WEBS 3-17=-139/264, 5-17=-65/640, 5-16=-746/396, 6-16=-131/797, 6-15=-166/641, 7-15=-199/572, 7-14=-129/790, 8-14=-731/393, 8-13=-65/634, 10-13=-133/264

NOTES
1) Unbalanced roof live loads have been considered for this design.
2) Wind: ASCE 7-02; 125mph (3-second gust); h=25ft; TCDL=4.2psf; BCDL=6.0psf; Category II; Exp B; enclosed; MWFRS (low-rise) and C-C Interior(1) zone; Lumber DOL=1.60 plate grip DOL=1.60. This truss is designed for C-C for members and forces, and for MWFRS for reactions specified.
3) Provide adequate drainage to prevent water ponding.
4) This truss has been designed for a 10.0 psf bottom chord live load nonconcurrent with any other live loads.
5) Bearing at joint(s) 2, 11 considers parallel to grain value using ANSI/TPI 1 angle to grain formula. Building designer should verify capacity of bearing surface.
6) Provide mechanical connection (by others) of truss to bearing plate capable of withstanding 362 lb uplift at joint 2 and 377 lb uplift at joint 11.

LOAD CASE(S) Standard

This document was originally issued by Lassiter, Frank on November 21,2007. This is not considered a sealed document. Official sealed drawings are available upon request from the manufacturer indicated above.
November 21,2007

ENGINEERING BY TRENCO A MiTek Affiliate
818 Soundside Road
Edenton, NC 27932

Job	Truss	Truss Type	Qty	Ply	AUSTIN_FL_125
AUSTIN	HS2	SPECIAL	1	1	E4530663
					Job Reference (optional)

Maronda Homes Inc., Sanford, FL — 7.020 s Nov 9 2007 MiTek Industries, Inc. Wed Nov 21 08:43:58 2007 Page 1

1-0-0	6-3-1	9-6-8	15-0-0	21-0-0	25-4-8	29-8-15	36-0-0	37-0-0
1-0-0	6-3-1	3-3-7	5-5-8	6-0-0	4-4-8	4-4-8	6-3-1	1-0-0

Scale = 1:64.8

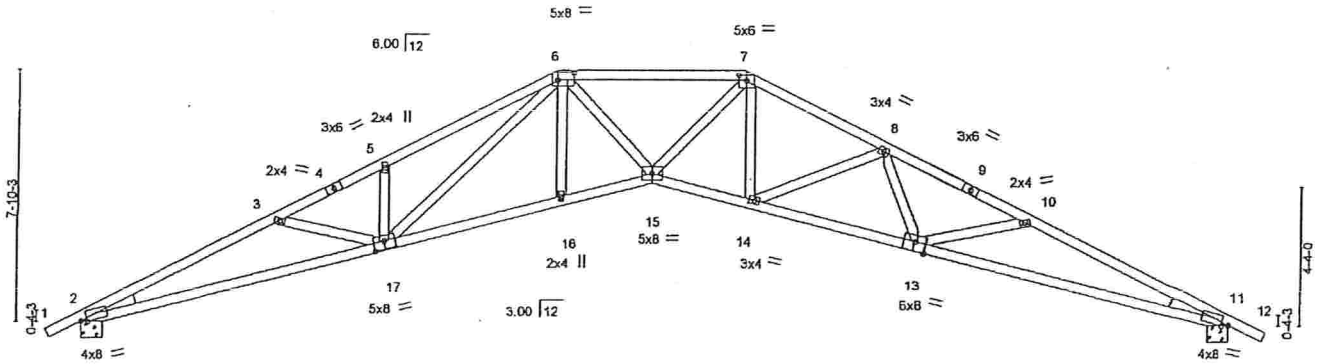

9-6-8	15-0-0	18-0-0	21-0-0	26-5-8	36-0-0
9-6-8	5-5-8	3-0-0	3-0-0	5-5-8	9-6-8

Plate Offsets (X,Y): [2:0-2-7,Edge], [6:0-6-0,0-2-8], [7:0-3-0,0-2-0], [11:0-2-7,Edge], [13:0-4-0,Edge], [17:0-4-0,0-3-0]

LOADING (psf)		SPACING	2-0-0	CSI		DEFL	in	(loc)	l/defl	L/d	PLATES	GRIP
TCLL	16.0	Plates Increase	1.25	TC	0.81	Vert(LL)	-0.52	15	>816	240	MT20	244/190
TCDL	7.0	Lumber Increase	1.25	BC	0.81	Vert(TL)	-1.03	14-15	>412	180		
BCLL	10.0	Rep Stress Incr	YES	WB	0.34	Horz(TL)	0.74	11	n/a	n/a		
BCDL	10.0	Code FBC2004/TPI2002		(Matrix)							Weight: 180 lb	

LUMBER
TOP CHORD 2 X 4 SYP No.2
BOT CHORD 2 X 4 SYP No.1D
WEBS 2 X 4 SYP No.2
WEDGE
Left: 2 X 4 SYP No.3, Right: 2 X 4 SYP No.3

BRACING
TOP CHORD Structural wood sheathing directly applied or 2-1-13 oc purlins.
BOT CHORD Rigid ceiling directly applied or 6-1-12 oc bracing.

REACTIONS (lb/size) 2=1584/0-8-0, 11=1584/0-8-0
Max Horz 2=-136(LC 7)
Max Uplift2=-348(LC 6), 11=-348(LC 7)

FORCES (lb) - Maximum Compression/Maximum Tension
TOP CHORD 1-2=0/18, 2-3=-4749/1442, 3-4=-4585/1286, 4-5=-4541/1298, 5-6=-4575/1411, 6-7=-4132/1161, 7-8=-3762/1106, 8-9=-4523/1280, 9-10=-4576/1270, 10-11=-4761/1456, 11-12=0/18
BOT CHORD 2-17=-1175/4302, 16-17=-676/3448, 15-16=-664/3439, 14-15=-653/3418, 13-14=-925/4039, 11-13=-1190/4314
WEBS 3-17=-95/207, 5-17=-172/212, 6-17=-389/1048, 6-16=0/164, 6-15=-174/1173, 7-15=-192/1208, 7-14=-142/544, 8-14=-631/272, 8-13=-27/457, 10-13=-124/258

NOTES
1) Unbalanced roof live loads have been considered for this design.
2) Wind: ASCE 7-02; 125mph (3-second gust); h=25ft; TCDL=4.2psf; BCDL=6.0psf; Category II; Exp B; enclosed; MWFRS (low-rise) and C-C Interior(1) zone; Lumber DOL=1.60 plate grip DOL=1.60. This truss is designed for C-C for members and forces, and for MWFRS for reactions specified.
3) Provide adequate drainage to prevent water ponding.
4) This truss has been designed for a 10.0 psf bottom chord live load nonconcurrent with any other live loads.
5) Bearing at joint(s) 2, 11 considers parallel to grain value using ANSI/TPI 1 angle to grain formula. Building designer should verify capacity of bearing surface.
6) Provide mechanical connection (by others) of truss to bearing plate capable of withstanding 348 lb uplift at joint 2 and 348 lb uplift at joint 11.

LOAD CASE(S) Standard

This document was originally issued by Lassiter, Frank on November 21,2007. This is not considered a sealed document. Official sealed drawings are available upon request from the manufacturer indicated above.

November 21,2007

ENGINEERING BY TRENCO
A MiTek Affiliate
818 Soundside Road
Edenton, NC 27932

Job	Truss	Truss Type	Qty	Ply	AUSTIN_FL_125
AUSTIN	HS3	SPECIAL	1	1	E4530665 Job Reference (optional)

Maronda Homes Inc., Sanford, FL — 7.020 s Nov 9 2007 MiTek Industries, Inc. Wed Nov 21 08:43:59 2007 Page 1

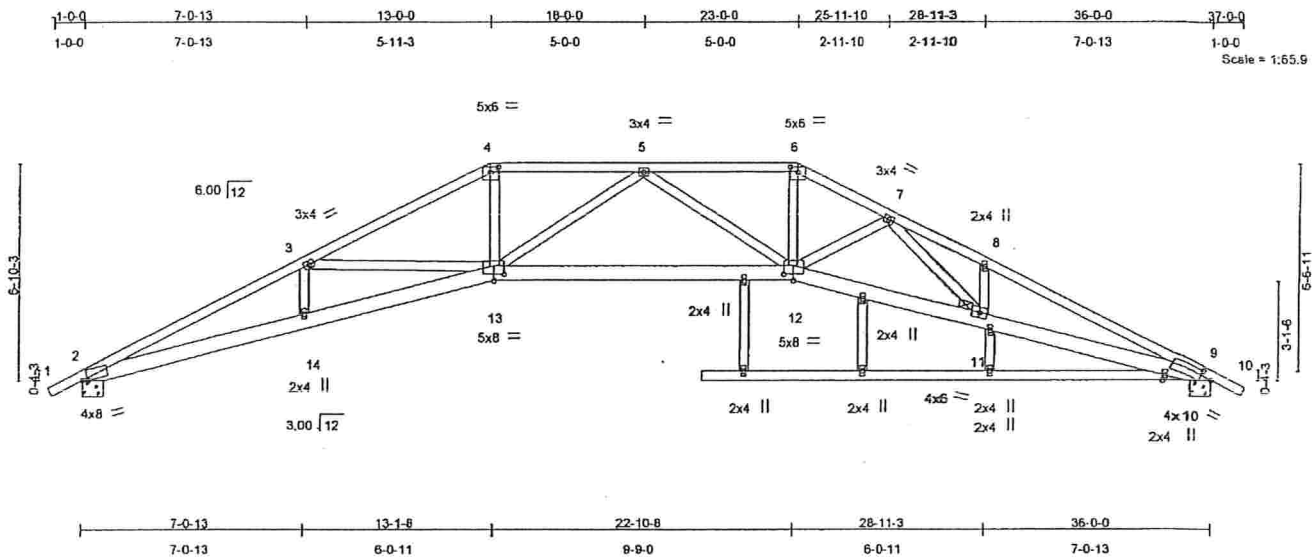

Plate Offsets (X,Y): [2:0-1-15,0-0-9], [4:0-3-0,0-2-0], [6:0-3-0,0-2-0], [9:0-4-2,0-1-12], [12:0-4-0,0-2-8], [13:0-4-0,0-2-8]

LOADING (psf)		SPACING	2-0-0	CSI		DEFL	in	(loc)	l/defl	L/d	PLATES	GRIP
TCLL	16.0	Plates Increase	1.25	TC	0.67	Vert(LL)	-0.50	12-13	>855	240	MT20	244/190
TCDL	7.0	Lumber Increase	1.25	BC	0.72	Vert(TL)	-1.00	12-13	>423	180		
BCLL	10.0	Rep Stress Incr	YES	WB	0.38	Horz(TL)	0.59	9	n/a	n/a		
BCDL	10.0	Code FBC2004/TPI2002		(Matrix)							Weight: 230 lb	

LUMBER
TOP CHORD 2 X 4 SYP No.2
BOT CHORD 2 X 6 SYP No.1D *Except*
9-15 2 X 4 SYP No.2
WEBS 2 X 4 SYP No.2

BRACING
TOP CHORD Structural wood sheathing directly applied or 2-3-9 oc purlins.
BOT CHORD Rigid ceiling directly applied or 7-7-10 oc bracing.
JOINTS 1 Brace at Jt(s): 11

REACTIONS (lb/size) 2=1584/0-8-0, 9=1584/0-8-0
Max Horz 2=124(LC 6)
Max Uplift2=-333(LC 6), 9=-333(LC 7)

FORCES (lb) - Maximum Compression/Maximum Tension
TOP CHORD 1-2=0/22, 2-3=-5016/1465, 3-4=-4224/1212, 4-5=-3781/1151, 5-6=-3774/1141, 6-7=-4169/1218, 7-8=-4887/1560, 8-9=-4982/1442, 9-10=0/22
BOT CHORD 2-14=-1189/4528, 13-14=-1189/4545, 12-13=-937/3931, 11-12=-988/4163, 9-11=-1166/4492
WEBS 3-14=0/209, 3-13=-671/364, 4-13=-314/1603, 5-13=-333/242, 5-12=-324/237, 6-12=-360/1655, 7-12=-343/209, 7-11=-269/533, 8-11=-117/234

NOTES
1) Unbalanced roof live loads have been considered for this design.
2) Wind: ASCE 7-02; 125mph (3-second gust); h=25ft; TCDL=4.2psf; BCDL=6.0psf; Category II; Exp B; enclosed; MWFRS (low-rise) and C-C Interior(1) zone; Lumber DOL=1.60 plate grip DOL=1.60. This truss is designed for C-C for members and forces, and for MWFRS for reactions specified.
3) Provide adequate drainage to prevent water ponding.
4) This truss has been designed for a 10.0 psf bottom chord live load nonconcurrent with any other live loads.
5) Bearing at joint(s) 2, 9 considers parallel to grain value using ANSI/TPI 1 angle to grain formula. Building designer should verify capacity of bearing surface.
6) Provide mechanical connection (by others) of truss to bearing plate capable of withstanding 333 lb uplift at joint 2 and 333 lb uplift at joint 9.

LOAD CASE(S) Standard

This document was originally issued by Lassiter, Frank on November 21,2007. This is not considered a sealed document. Official sealed drawings are available upon request from the manufacturer indicated above.
November 21,2007

ENGINEERING BY TRENCO
A MiTek Affiliate
818 Soundside Road
Edenton, NC 27932

Job	Truss	Truss Type	Qty	Ply	AUSTIN_FL_125
AUSTIN	HS4	SPECIAL	1	1	Job Reference (optional) E4530667

Maronda Homes Inc., Sanford, FL

7.020 s Nov 9 2007 MiTek Industries, Inc. Wed Nov 21 08:44:01 2007 Page 1

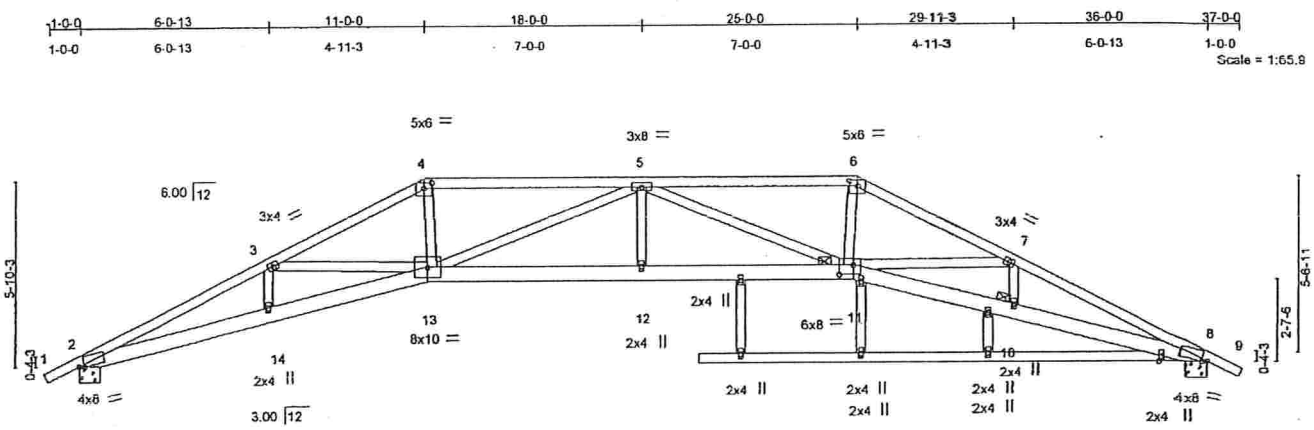

6-0-13	11-1-8	18-0-0	24-10-8	29-11-3	36-0-0
6-0-13	5-0-11	6-10-8	6-10-8	5-0-11	6-0-13

Plate Offsets (X,Y): [2:0-1-15,0-0-9], [4:0-3-0,0-2-0], [6:0-3-0,0-2-0], [8:0-1-15,0-0-9], [11:0-5-4,0-3-8]

LOADING (psf)		SPACING	2-0-0	CSI		DEFL	in	(loc)	l/defl	L/d	PLATES	GRIP
TCLL	16.0	Plates Increase	1.25	TC	0.49	Vert(LL)	-0.50	12	>850	240	MT20	244/190
TCDL	7.0	Lumber Increase	1.25	BC	0.78	Vert(TL)	-0.99	12-13	>428	180		
BCLL	10.0	Rep Stress Incr	YES	WB	0.74	Horz(TL)	0.61	8	n/a	n/a		
BCDL	10.0	Code FBC2004/TPI2002		(Matrix)							Weight: 229 lb	

LUMBER
TOP CHORD 2 X 4 SYP No.2
BOT CHORD 2 X 6 SYP No.1D *Except*
8-15 2 X 4 SYP No.2
WEBS 2 X 4 SYP No.2

BRACING
TOP CHORD Structural wood sheathing directly applied or 2-6-0 oc purlins.
BOT CHORD Rigid ceiling directly applied or 7-6-2 oc bracing.
JOINTS 1 Brace at Jt(s): 11, 10

REACTIONS (lb/size) 2=1584/0-8-0, 8=1584/0-8-0
Max Horz 2=108(LC 6)
Max Uplift2=-315(LC 6), 8=-315(LC 7)

FORCES (lb) - Maximum Compression/Maximum Tension
TOP CHORD 1-2=0/22, 2-3=-4994/1481, 3-4=-4488/1368, 4-5=-4049/1292, 5-6=-4049/1292, 6-7=-4488/1368, 7-8=-4994/1481, 8-9=0/22
BOT CHORD 2-14=-1208/4494, 13-14=-1214/4515, 12-13=-1248/4774, 11-12=-1248/4774, 10-11=-1214/4515, 8-10=-1208/4494
WEBS 3-14=0/167, 3-13=-391/249, 5-12=0/282, 5-11=-930/298, 7-11=-391/261, 7-10=0/167, 5-13=-930/300, 6-11=-364/1703, 4-13=-364/1703

NOTES
1) Unbalanced roof live loads have been considered for this design.
2) Wind: ASCE 7-02; 125mph (3-second gust); h=25ft; TCDL=4.2psf; BCDL=6.0psf; Category II; Exp B; enclosed; MWFRS (low-rise) and C-C Interior(1) zone; Lumber DOL=1.60 plate grip DOL=1.60. This truss is designed for C-C for members and forces, and for MWFRS for reactions specified.
3) Provide adequate drainage to prevent water ponding.
4) This truss has been designed for a 10.0 psf bottom chord live load nonconcurrent with any other live loads.
5) Bearing at joint(s) 2, 8 considers parallel to grain value using ANSI/TPI 1 angle to grain formula. Building designer should verify capacity of bearing surface.
6) Provide mechanical connection (by others) of truss to bearing plate capable of withstanding 315 lb uplift at joint 2 and 315 lb uplift at joint 8.

LOAD CASE(S) Standard

This document was originally issued by Lassiter, Frank on November 21,2007. This is not considered a sealed document. Official sealed drawings are available upon request from the manufacturer indicated above. November 21,2007

ENGINEERING BY TRENCO A MiTek Affiliate
818 Soundside Road
Edenton, NC 27932

Job	Truss	Truss Type	Qty	Ply	AUSTIN_FL_125
AUSTIN	HS5	SPECIAL	1	1	Job Reference (optional)

E4530668

Maronda Homes Inc., Sanford, FL

7.020 s Nov 9 2007 MiTek Industries, Inc. Wed Nov 21 08:44:01 2007 Page 1

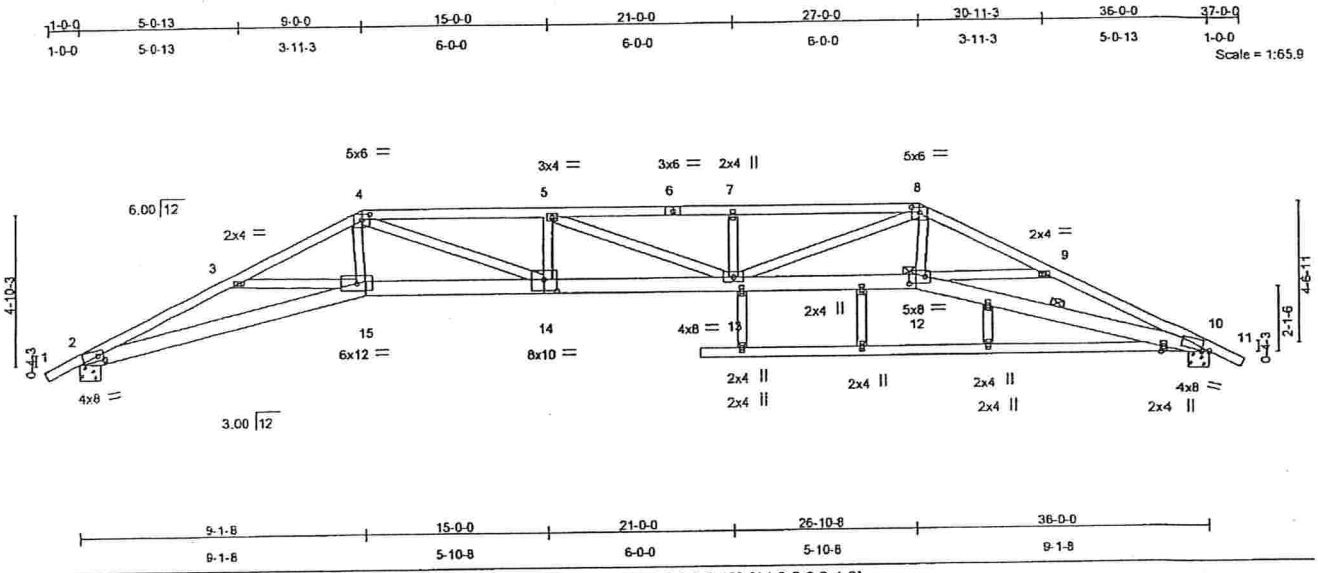

Plate Offsets (X,Y): [2:0-2-4,0-2-0], [4:0-3-0,0-2-0], [8:0-3-0,0-2-0], [10:0-2-11,0-0-9], [12:0-6-0,0-2-12], [14:0-5-0,0-4-8]

LOADING (psf)		SPACING	2-0-0	CSI		DEFL	in	(loc)	l/defl	L/d	PLATES	GRIP
TCLL	16.0	Plates Increase	1.25	TC	0.57	Vert(LL)	-0.64	13-14	>665	240	MT20	244/190
TCDL	7.0	Lumber Increase	1.25	BC	0.69	Vert(TL)	-1.26	13-14	>335	180		
BCLL	10.0	Rep Stress Incr	YES	WB	0.34	Horz(TL)	0.62	10	n/a	n/a		
BCDL	10.0	Code FBC2004/TPI2002		(Matrix)							Weight: 228 lb	

LUMBER
TOP CHORD 2 X 4 SYP No.2
BOT CHORD 2 X 6 SYP No.1D *Except*
10-16 2 X 4 SYP No.2
WEBS 2 X 4 SYP No.2

BRACING
TOP CHORD Structural wood sheathing directly applied or 2-4-3 oc purlins.
BOT CHORD Rigid ceiling directly applied or 6-7-11 oc bracing. Except:
7-3-0 oc bracing: 10-12
JOINTS 1 Brace at Jt(s): 12

REACTIONS (lb/size) 2=1584/0-8-0, 10=1584/0-8-0
Max Horz 2=-93(LC 7)
Max Uplift2=-295(LC 6), 10=-295(LC 7)

FORCES (lb) - Maximum Compression/Maximum Tension
TOP CHORD 1-2=0/22, 2-3=-4835/1610, 3-4=-4753/1444, 4-5=-5526/1846, 5-6=-5514/1843, 6-7=-5514/1843, 7-8=-5514/1843, 8-9=-4762/1448, 9-10=-4839/1611, 10-11=0/22
BOT CHORD 2-15=-1336/4371, 14-15=-1088/4298, 13-14=-1595/5541, 12-13=-1091/4308, 10-12=-1337/4375
WEBS 3-15=-37/270, 4-14=-532/1417, 5-14=-307/255, 5-13=-115/71, 7-13=-276/257, 8-13=-523/1393, 9-12=-44/277, 8-12=-230/1390, 4-15=-223/1372

NOTES
1) Unbalanced roof live loads have been considered for this design.
2) Wind: ASCE 7-02; 125mph (3-second gust); h=25ft; TCDL=4.2psf; BCDL=6.0psf; Category II; Exp B; enclosed; MWFRS (low-rise) and C-C Interior(1) zone; Lumber DOL=1.60 plate grip DOL=1.60. This truss is designed for C-C for members and forces, and for MWFRS for reactions specified.
3) Provide adequate drainage to prevent water ponding.
4) This truss has been designed for a 10.0 psf bottom chord live load nonconcurrent with any other live loads.
5) Bearing at joint(s) 2, 10 considers parallel to grain value using ANSI/TPI 1 angle to grain formula. Building designer should verify capacity of bearing surface.
6) Provide mechanical connection (by others) of truss to bearing plate capable of withstanding 295 lb uplift at joint 2 and 295 lb uplift at joint 10.

LOAD CASE(S) Standard

This document was originally issued by Lassiter, Frank on November 21,2007. This is not considered a sealed document. Official sealed drawings are available upon request from the manufacturer indicated above.

November 21,2007

ENGINEERING BY TRENCO
A MiTek Affiliate
818 Soundside Road
Edenton, NC 27932

Job	Truss	Truss Type	Qty	Ply	AUSTIN_FL_125
AUSTIN	HSGRD1	SPECIAL	1	3	E4530669 Job Reference (optional)

Maronda Homes Inc., Sanford, FL — 7.020 s Nov 9 2007 MiTek Industries, Inc. Wed Nov 21 08:44:02 2007 Page 1

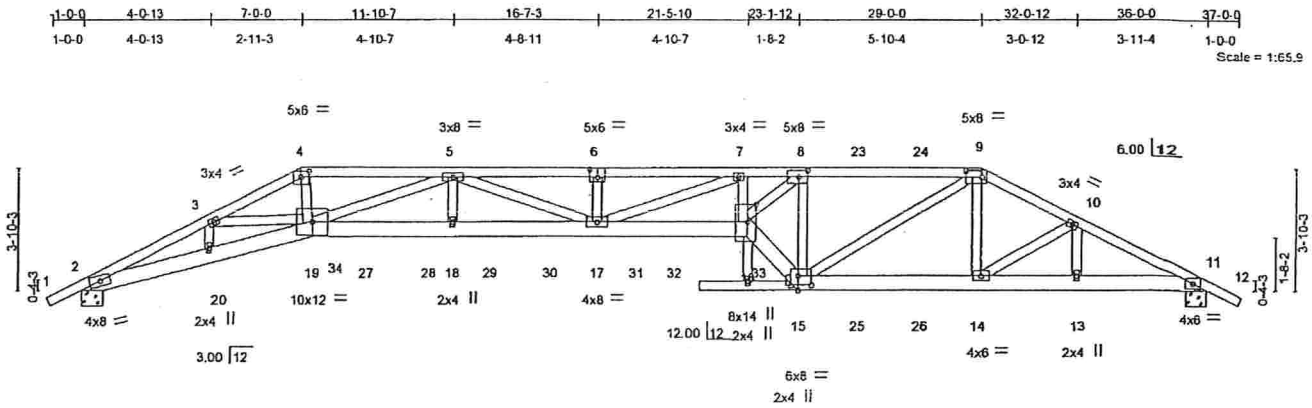

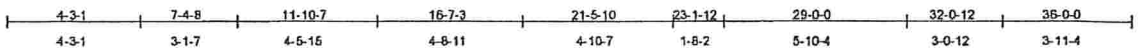

Plate Offsets (X,Y): [4:0-3-0,0-2-0], [6:0-3-0,0-3-0], [8:0-3-8,0-2-8], [9:0-6-0,0-2-8], [15:0-1-12,0-2-12], [15:0-5-4,0-3-8], [16:0-6-12,0-3-8]

LOADING (psf)		SPACING	2-0-0	CSI		DEFL	in	(loc)	l/defl	L/d	PLATES	GRIP
TCLL	16.0	Plates Increase	1.25	TC	0.46	Vert(LL)	0.75	16-17	>563	240	MT20	244/190
TCDL	7.0	Lumber Increase	1.25	BC	0.88	Vert(TL)	-1.26	16-17	>338	180		
BCLL	10.0	Rep Stress Incr	NO	WB	0.79	Horz(TL)	-0.47	2	n/a	n/a		
BCDL	10.0	Code FBC2004/TPI2002		(Matrix)							Weight: 653 lb	

LUMBER
TOP CHORD 2 X 4 SYP No.1D
BOT CHORD 2 X 6 SYP No.2 *Except*
16-19 2 X 6 SYP No.1D, 15-21 2 X 4 SYP No.2
WEBS 2 X 4 SYP No.2

BRACING
TOP CHORD Structural wood sheathing directly applied or 5-6-9 oc purlins.
BOT CHORD Rigid ceiling directly applied or 10-0-0 oc bracing.

REACTIONS (lb/size) 11=3534/0-8-0, 2=3592/0-8-0
Max Horz 11=-80(LC 6)
Max Uplift11=-1665(LC 8), 2=-1691(LC 7)

FORCES (lb) - Maximum Compression/Maximum Tension
TOP CHORD 9-10=-6957/3391, 10-11=-6833/3194, 11-12=0/25, 4-5=-12589/6331, 5-6=-18762/9386, 6-7=-18762/9386, 7-8=-18144/9016, 8-23=-9223/4588, 23-24=-9223/4588, 9-24=-9223/4588, 1-2=0/22, 2-3=-11630/5630, 3-4=-12800/6409
BOT CHORD 15-25=-3021/6267, 25-26=-3021/6264, 14-26=-3020/6262, 13-14=-2812/5981, 11-13=-2812/5981, 15-16=-5882/11965, 19-27=-8362/16846, 27-28=-8362/16846, 18-28=-8362/16846, 18-29=-8362/16846, 29-30=-8362/16846, 17-30=-8362/16846, 17-31=-8962/18164, 31-32=-8964/18168, 32-33=-8965/18171, 16-33=-8967/18173, 2-20=-4992/10394, 20-34=-5040/10490, 19-34=-5156/10675
WEBS 10-13=-118/155, 10-14=-311/381, 9-14=-408/1039, 9-15=-1790/3464, 8-15=-9174/4681, 8-16=-6409/12898, 7-16=-324/209, 7-17=-452/686, 6-17=-208/154, 5-17=-1025/2102, 5-18=-369/769, 5-19=-4643/2383, 4-19=-2772/5570, 3-19=-901/1444, 3-20=-282/241

NOTES
1) 3-ply truss to be connected together with 10d (0.131"x3") nails as follows:
Top chords connected as follows: 2 X 4 - 1 row at 0-9-0 oc.
Bottom chords connected as follows: 2 X 6 - 2 rows at 0-6-0 oc.
Webs connected as follows: 2 X 4 - 1 row at 0-9-0 oc.
2) All loads are considered equally applied to all plies, except if noted as front (F) or back (B) face in the LOAD CASE(S) section. Ply to ply connections have been provided to distribute only loads noted as (F) or (B), unless otherwise indicated.
3) Unbalanced roof live loads have been considered for this design.
4) Wind: ASCE 7-02; 125mph (3-second gust); h=25ft; TCDL=4.2psf; BCDL=6.0psf; Category II; Exp B; enclosed; MWFRS (low-rise); Lumber DOL=1.60 plate grip DOL=1.60.
5) Provide adequate drainage to prevent water ponding.
6) This truss has been designed for a 10.0 psf bottom chord live load nonconcurrent with any other live loads.
7) Bearing at joint(s) 2 considers parallel to grain value using ANSI/TPI 1 angle to grain formula. Building designer should verify capacity of bearing surface.
8) Provide mechanical connection (by others) of truss to bearing plate capable of withstanding 1665 lb uplift at joint 11 and 1691 lb uplift at joint 2.

Continued on page 2

This document was originally issued by Lassiter, Frank on November 21,2007. This is not considered a sealed document. Official sealed drawings are available upon request from the manufacturer indicated above.
November 21,2007

ENGINEERING BY TRENCO A MiTek Affiliate
818 Soundside Road
Edenton, NC 27932

Job	Truss	Truss Type	Qty	Ply	AUSTIN_FL_125
AUSTIN	GRD1	COMMON	1	3	E4530647 Job Reference (optional)

Maronda Homes Inc., Sanford, FL

7.020 s Nov 9 2007 MiTek Industries, Inc. Wed Nov 21 08:43:46 2007 Page 1

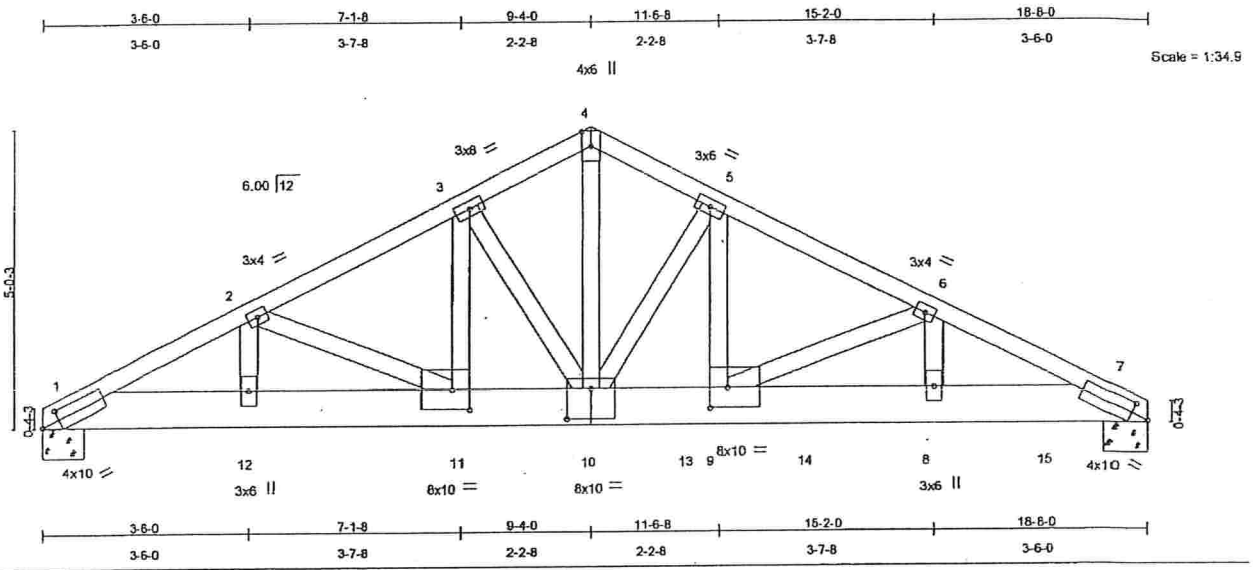

Plate Offsets (X,Y): [1:0-3-9,0-2-0], [7:0-3-9,0-2-0], [9:0-3-8,0-4-0], [10:0-5-0,0-6-0], [11:0-3-8,0-4-0]

LOADING (psf)		SPACING	2-0-0	CSI		DEFL	in	(loc)	l/defl	L/d	PLATES	GRIP
TCLL	16.0	Plates Increase	1.25	TC	0.31	Vert(LL)	-0.11	9	>999	240	MT20	244/190
TCDL	7.0	Lumber Increase	1.25	BC	0.63	Vert(TL)	-0.21	9	>999	180		
BCLL	10.0	Rep Stress Incr	NO	WB	0.49	Horz(TL)	0.05	7	n/a	n/a		
BCDL	10.0	Code FBC2004/TPI2002		(Matrix)							Weight: 387 lb	

LUMBER
TOP CHORD 2 X 4 SYP No.2
BOT CHORD 2 X 8 SYP No.1D
WEBS 2 X 4 SYP No.2

BRACING
TOP CHORD Structural wood sheathing directly applied or 6-0-0 oc purlins.
BOT CHORD Rigid ceiling directly applied or 10-0-0 oc bracing.

REACTIONS (lb/size) 1=5421/0-8-0, 7=8079/0-8-0
Max Horz 1=-75(LC 3)
Max Uplift1=-2226(LC 5), 7=-3102(LC 6)

FORCES (lb) - Maximum Compression/Maximum Tension
TOP CHORD 1-2=-10804/4484, 2-3=-11048/4653, 3-4=-9322/3815, 4-5=-9326/3817, 5-6=-11441/4498, 6-7=-14272/5457
BOT CHORD 1-12=-4014/9575, 11-12=-4014/9575, 10-11=-4117/9848, 10-13=-3934/10206, 9-13=-3934/10206, 9-14=-4814/12661, 8-14=-4814/12661, 8-15=-4814/12661, 7-15=-4814/12661
WEBS 2-12=-274/189, 2-11=-236/404, 3-11=-1561/3066, 3-10=-2740/1466, 4-10=-3267/8001, 5-10=-3404/1210, 5-9=-1267/3777, 6-9=-2705/991, 6-8=-790/2392

NOTES
1) 3-ply truss to be connected together with 10d (0.131"x3") nails as follows:
Top chords connected as follows: 2 X 4 - 1 row at 0-9-0 oc.
Bottom chords connected as follows: 2 X 8 - 4 rows at 0-4-0 oc.
Webs connected as follows: 2 X 4 - 1 row at 0-9-0 oc.
2) All loads are considered equally applied to all plies, except if noted as front (F) or back (B) face in the LOAD CASE(S) section. Ply to ply connections have been provided to distribute only loads noted as (F) or (B), unless otherwise indicated.
3) Unbalanced roof live loads have been considered for this design.
4) Wind: ASCE 7-02; 125mph (3-second gust); h=25ft; TCDL=4.2psf; BCDL=6.0psf; Category II; Exp B; enclosed; MWFRS (low-rise); Lumber DOL=1.60 plate grip DOL=1.60.
5) This truss has been designed for a 10.0 psf bottom chord live load nonconcurrent with any other live loads.
6) Provide mechanical connection (by others) of truss to bearing plate capable of withstanding 2226 lb uplift at joint 1 and 3102 lb uplift at joint 7.
7) Hanger(s) or other connection device(s) shall be provided sufficient to support concentrated load(s) 3561 lb down and 1914 lb up at 7-1-8, 1706 lb down and 613 lb up at 9-0-12, 1710 lb down and 650 lb up at 11-0-12, 1632 lb down and 567 lb up at 13-0-12, and 1632 lb down and 585 lb up at 15-0-12, and 1710 lb down and 706 lb up at 17-0-12 on bottom chord. The design/selection of such connection device(s) is the responsibility of others.

LOAD CASE(S) Standard
1) Regular: Lumber Increase=1.25, Plate Increase=1.25

Continued on page 2

This document was originally issued by Lassiter, Frank on November 21,2007. This is not considered a sealed document. Official sealed drawings are available upon request from the manufacturer indicated above.

November 21,2007

ENGINEERING BY TRENCO
A MiTek Affiliate
818 Soundside Road
Edenton, NC 27932

LOAD CASE(S) Standard
Uniform Loads (plf)
Vert: 1-4=-46, 4-7=-46, 1-7=-40
Concentrated Loads (lb)
Vert: 11=-3561(F) 10=-1706(F) 8=-1632(F) 13=-1710(F) 14=-1632(F) 15=-1710(F)

Job	Truss	Truss Type	Qty	Ply	AUSTIN_FL_125
AUSTIN	T1	COMMON	7	1	E4530699 Job Reference (optional)

Marondé Homes Inc., Sanford, FL

7.020 s Nov 9 2007 MiTek Industries, Inc. Wed Nov 21 08:44:16 2007 Page 1

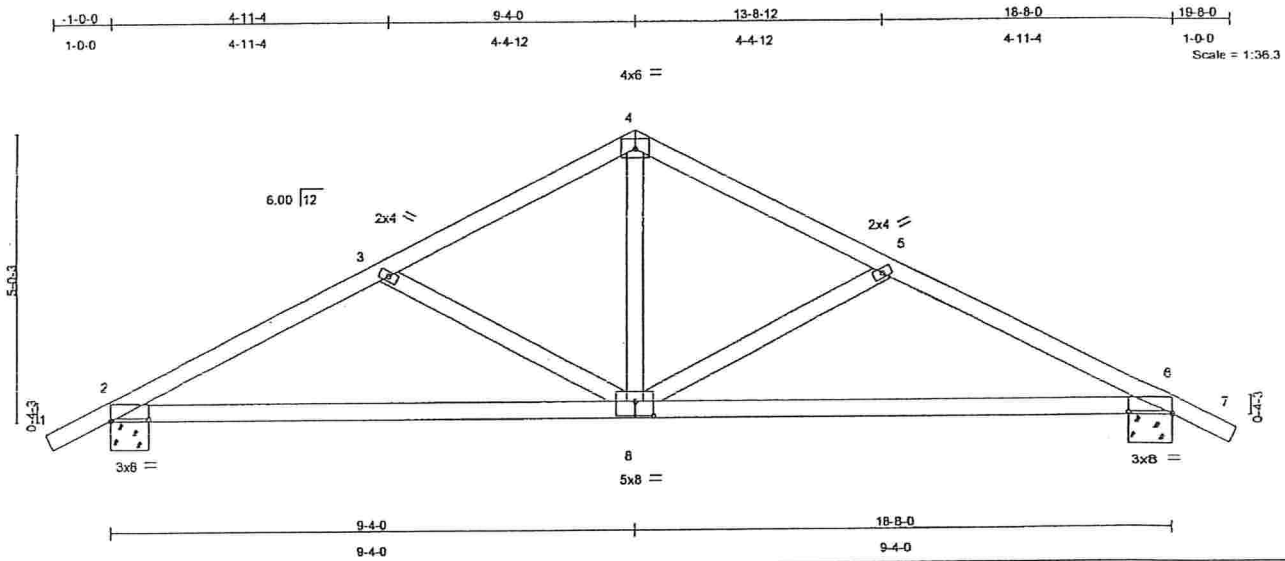

Plate Offsets (X,Y): [2:0-8-0,0-0-6], [6:0-8-0,0-0-6], [8:0-4-0,0-3-0]

LOADING (psf)		SPACING	2-0-0	CSI		DEFL	In	(loc)	l/defl	L/d	PLATES	GRIP
TCLL	16.0	Plates Increase	1.25	TC	0.27	Vert(LL)	-0.13	6-8	>999	240	MT20	244/190
TCDL	7.0	Lumber Increase	1.25	BC	0.61	Vert(TL)	-0.30	6-8	>722	180		
BCLL	10.0	Rep Stress Incr	YES	WB	0.12	Horz(TL)	0.03	6	n/a	n/a		
BCDL	10.0	Code FBC2004/TPI2002		(Matrix)							Weight: 84 lb	

LUMBER
TOP CHORD 2 X 4 SYP No.2
BOT CHORD 2 X 4 SYP No.2
WEBS 2 X 4 SYP No.2

BRACING
TOP CHORD Structural wood sheathing directly applied or 5-4-4 oc purlins.
BOT CHORD Rigid ceiling directly applied or 10-0-0 oc bracing.

REACTIONS (lb/size) 2=838/0-8-0, 6=838/0-8-0
Max Horz 2=95(LC 6)
Max Uplift2=-228(LC 6), 6=-228(LC 7)

FORCES (lb) - Maximum Compression/Maximum Tension
TOP CHORD 1-2=0/21, 2-3=-1182/392, 3-4=-960/295, 4-5=-960/295, 5-6=-1182/392, 6-7=0/21
BOT CHORD 2-8=-220/1023, 6-8=-220/1023
WEBS 3-8=-257/202, 4-8=-69/623, 5-8=-257/202

NOTES
1) Unbalanced roof live loads have been considered for this design.
2) Wind: ASCE 7-02; 125mph (3-second gust); h=25ft; TCDL=4.2psf; BCDL=6.0psf; Category II; Exp B; enclosed; MWFRS (low-rise) and C-C Interior(1) zone; Lumber DOL=1.60 plate grip DOL=1.60. This truss is designed for C-C for members and forces, and for MWFRS for reactions specified.
3) This truss has been designed for a 10.0 psf bottom chord live load nonconcurrent with any other live loads.
4) Provide mechanical connection (by others) of truss to bearing plate capable of withstanding 228 lb uplift at joint 2 and 228 lb uplift at joint 6.

LOAD CASE(S) Standard

This document was originally issued by Lassiter, Frank on November 21,2007. This is not considered a sealed document. Official sealed drawings are available upon request from the manufacturer indicated above.

November 21,2007

ENGINEERING BY TRENCO
A MiTek Affiliate
818 Soundside Road
Edenton, NC 27932

Job	Truss	Truss Type	Qty	Ply	AUSTIN_FL_125
AUSTIN	H5	HIP	1	1	E4530653 Job Reference (optional)

Maronda Homes Inc., Sanford, FL

7.020 s Nov 9 2007 MiTek Industries, Inc. Wed Nov 21 08:43:51 2007 Page 1

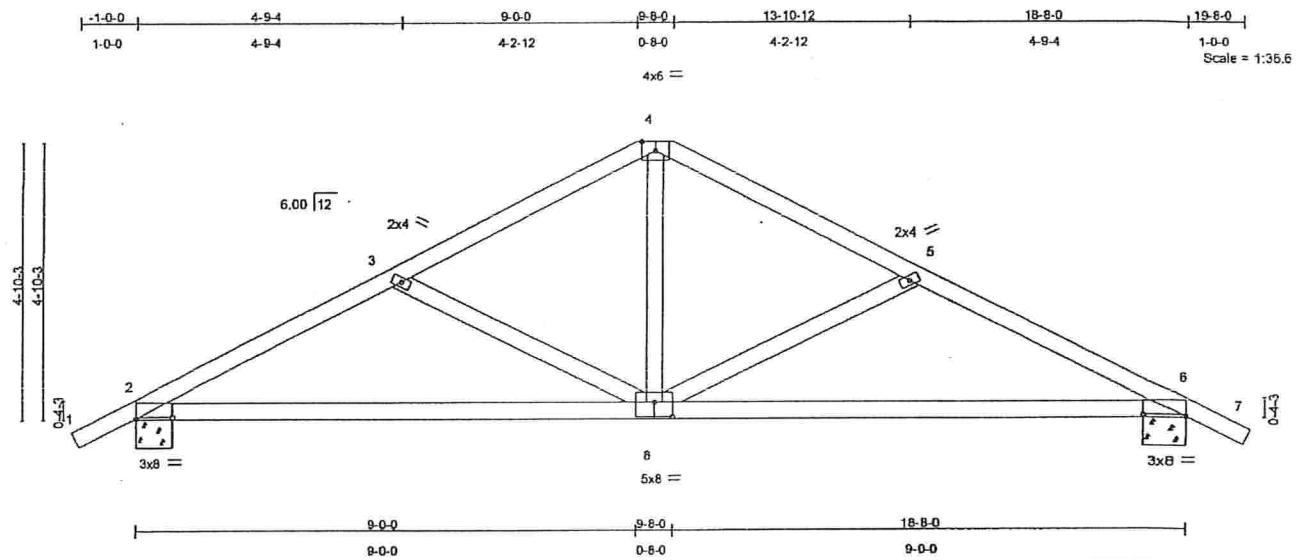

Plate Offsets (X,Y): [2:0-8-0,0-0-6], [6:0-8-0,0-0-6], [8:0-4-0,0-3-0]

LOADING (psf)		SPACING	2-0-0	CSI		DEFL	in	(loc)	l/defl	L/d	PLATES	GRIP
TCLL	16.0	Plates Increase	1.25	TC	0.26	Vert(LL)	-0.12	6-8	>999	240	MT20	244/190
TCDL	7.0	Lumber Increase	1.25	BC	0.60	Vert(TL)	-0.30	6-8	>730	180		
BCLL	10.0	Rep Stress Incr	YES	WB	0.11	Horz(TL)	0.03	6	n/a	n/a		
BCDL	10.0	Code FBC2004/TPI2002		(Matrix)							Weight: 84 lb	

LUMBER
TOP CHORD 2 X 4 SYP No.2
BOT CHORD 2 X 4 SYP No.2
WEBS 2 X 4 SYP No.2

BRACING
TOP CHORD Structural wood sheathing directly applied or 5-4-3 oc purlins.
BOT CHORD Rigid ceiling directly applied or 10-0-0 oc bracing.

REACTIONS (lb/size) 2=838/0-8-0, 6=838/0-8-0
Max Horz 2=-95(LC 7)
Max Uplift2=-228(LC 6), 6=-228(LC 7)

FORCES (lb) - Maximum Compression/Maximum Tension
TOP CHORD 1-2=0/21, 2-3=-1188/396, 3-4=-962/294, 4-5=-962/294, 5-6=-1188/396, 6-7=0/21
BOT CHORD 2-8=-225/1030, 6-8=-225/1030
WEBS 3-8=-261/203, 5-8=-261/203, 4-8=-58/611

NOTES
1) Unbalanced roof live loads have been considered for this design.
2) Wind: ASCE 7-02; 125mph (3-second gust); h=25ft; TCDL=4.2psf; BCDL=6.0psf; Category II; Exp B; enclosed; MWFRS (low-rise) and C-C Interior(1) zone; Lumber DOL=1.60 plate grip DOL=1.60. This truss is designed for C-C for members and forces, and for MWFRS for reactions specified.
3) This truss has been designed for a 10.0 psf bottom chord live load nonconcurrent with any other live loads.
4) Provide mechanical connection (by others) of truss to bearing plate capable of withstanding 228 lb uplift at joint 2 and 228 lb uplift at joint 6.

LOAD CASE(S) Standard

This document was originally issued by Lassiter, Frank on November 21,2007. This is not considered a sealed document. Official sealed drawings are available upon request from the manufacturer indicated above.

November 21,2007

ENGINEERING BY TRENCO
A MiTek Affiliate
818 Soundside Road
Edenton, NC 27932

Job	Truss	Truss Type	Qty	Ply	AUSTIN_FL_125
AUSTIN	HGRD2	HIP	1	1	Job Reference (optional)

E4530659

Maronda Homes Inc., Sanford, FL

7.020 s Nov 9 2007 MiTek Industries, Inc. Wed Nov 21 08:43:55 2007 Page 1

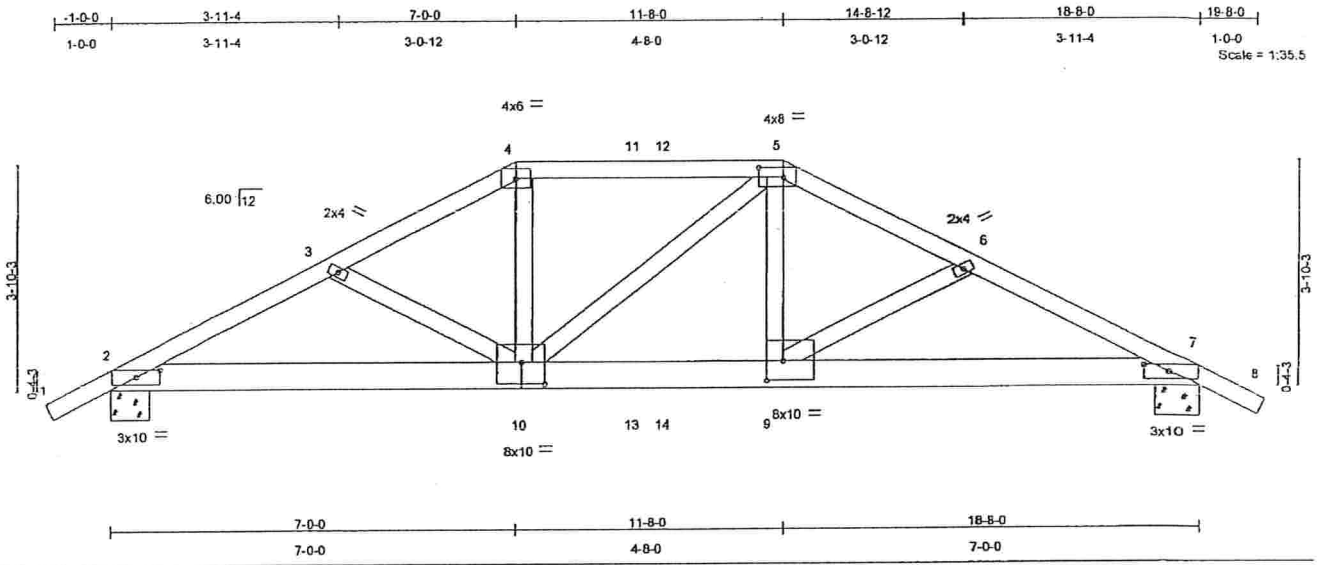

Plate Offsets (X,Y): [2:0-5-0,0-1-7], [5:0-5-4,0-2-0], [7:0-5-0,0-1-7], [9:0-3-8,0-4-0], [10:0-5-0,0-4-8]

LOADING (psf)		SPACING	2-0-0	CSI		DEFL	In	(loc)	l/defl	L/d	PLATES	GRIP
TCLL	16.0	Plates Increase	1.25	TC	0.39	Vert(LL)	0.12	9-10	>999	240	MT20	244/190
TCDL	7.0	Lumber Increase	1.25	BC	0.61	Vert(TL)	-0.20	9-10	>999	180		
BCLL	10.0	Rep Stress Incr	NO	WB	0.22	Horz(TL)	0.06	7	n/a	n/a		
BCDL	10.0	Code FBC2004/TPI2002		(Matrix)							Weight: 105 lb	

LUMBER
TOP CHORD 2 X 4 SYP No.2
BOT CHORD 2 X 6 SYP No.2
WEBS 2 X 4 SYP No.2

BRACING
TOP CHORD Structural wood sheathing directly applied or 3-4-5 oc purlins.
BOT CHORD Rigid ceiling directly applied or 6-6-5 oc bracing.

REACTIONS (lb/size) 2=1806/0-8-0, 7=1802/0-8-0
Max Horz 2=80(LC 5)
Max Uplift2=-884(LC 7), 7=-882(LC 8)

FORCES (lb) - Maximum Compression/Maximum Tension
TOP CHORD 1-2=0/25, 2-3=-3298/1624, 3-4=-3207/1614, 4-11=-2888/1496, 11-12=-2888/1496, 5-12=-2888/1496, 5-6=-3196/1610, 6-7=-3289/1621, 7-8=0/25
BOT CHORD 2-10=-1419/2869, 10-13=-1371/2893, 13-14=-1371/2893, 9-14=-1371/2893, 7-9=-1336/2861
WEBS 3-10=-79/94, 4-10=-481/1186, 5-10=-72/59, 5-9=-482/1187, 6-9=-79/92

NOTES
1) Unbalanced roof live loads have been considered for this design.
2) Wind: ASCE 7-02; 125mph (3-second gust); h=25ft; TCDL=4.2psf; BCDL=6.0psf; Category II; Exp B; enclosed; MWFRS (low-rise); Lumber DOL=1.60 plate grip DOL=1.60.
3) Provide adequate drainage to prevent water ponding.
4) This truss has been designed for a 10.0 psf bottom chord live load nonconcurrent with any other live loads.
5) Provide mechanical connection (by others) of truss to bearing plate capable of withstanding 884 lb uplift at joint 2 and 882 lb uplift at joint 7.
6) Hanger(s) or other connection device(s) shall be provided sufficient to support concentrated load(s) 19 lb down and 72 lb up at 7-0-0, 19 lb down and 72 lb up at 9-0-12, and 19 lb down and 72 lb up at 9-7-4, and 19 lb down and 72 lb up at 11-8-0 on top chord, and 738 lb down and 433 lb up at 7-0-0, 190 lb down and 93 lb up at 9-0-12, and 190 lb down and 93 lb up at 9-7-4, and 738 lb down and 433 lb up at 11-7-4 on bottom chord. The design/selection of such connection device(s) is the responsibility of others.
7) In the LOAD CASE(S) section, loads applied to the face of the truss are noted as front (F) or back (B).

LOAD CASE(S) Standard
1) Regular: Lumber Increase=1.25, Plate Increase=1.25
Uniform Loads (plf)
Vert: 1-4=-46, 4-5=-46, 5-8=-46, 2-7=-40
Concentrated Loads (lb)
Vert: 4=-19(B) 5=-19(B) 10=-738(B) 9=-738(B) 11=-19(B) 12=-19(B) 13=-190(B) 14=-190(B)

This document was originally issued by Lassiter, Frank on November 21,2007. This is not considered a sealed document. Official sealed drawings are available upon request from the manufacturer indicated above.

November 21,2007

ENGINEERING BY TRENCO A MiTek Affiliate
818 Soundside Road
Edenton, NC 27932

Job	Truss	Truss Type	Qty	Ply	AUSTIN_FL_125	
AUSTIN	JGRD1	MONO TRUSS	4	1	Job Reference (optional)	E4530680

Maronda Homes Inc., Sanford, FL

7.020 s Nov 9 2007 MiTek Industries, Inc. Wed Nov 21 08:44:06 2007 Page 1

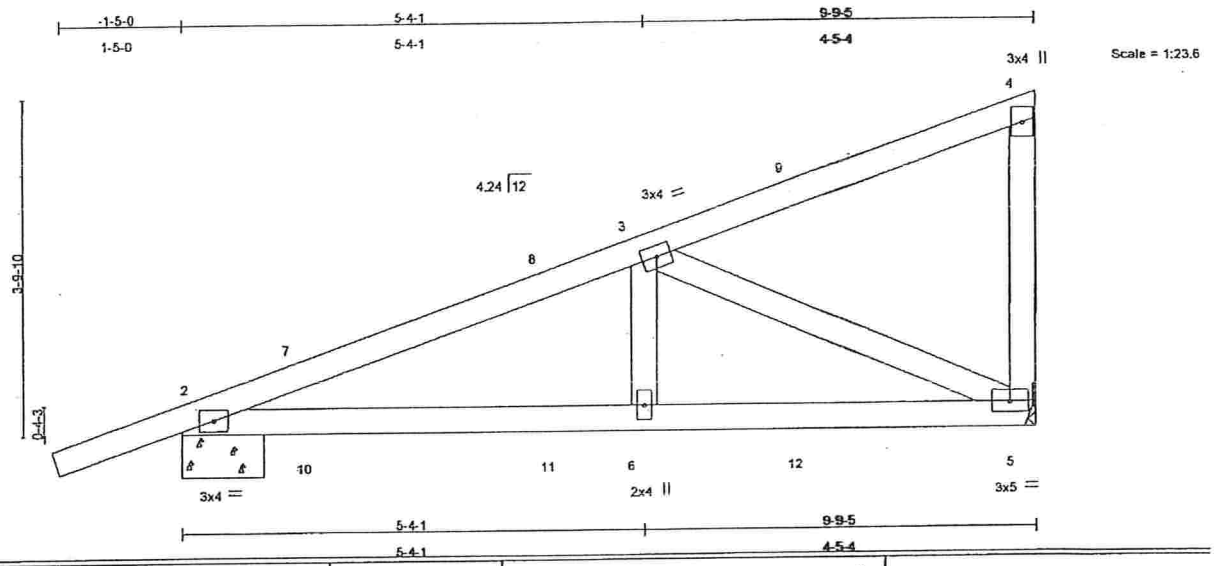

LOADING (psf)		SPACING	2-0-0	CSI		DEFL	in	(loc)	l/defl	L/d	PLATES	GRIP
TCLL	16.0	Plates Increase	1.25	TC	0.24	Vert(LL)	-0.02	5-6	>999	240	MT20	244/190
TCDL	7.0	Lumber Increase	1.25	BC	0.29	Vert(TL)	-0.05	5-6	>999	180		
BCLL	10.0	Rep Stress Incr	NO	WB	0.24	Horz(TL)	0.01	5	n/a	n/a		
BCDL	10.0	Code FBC2004/TPI2002		(Matrix)							Weight: 46 lb	

LUMBER
TOP CHORD 2 X 4 SYP No.2
BOT CHORD 2 X 4 SYP No.2
WEBS 2 X 4 SYP No.2

BRACING
TOP CHORD Structural wood sheathing directly applied or 6-0-0 oc purlins, except end verticals.
BOT CHORD Rigid ceiling directly applied or 9-11-9 oc bracing.

REACTIONS (lb/size) 5=556/Mechanical, 2=521/0-11-5
Max Horz 2=174(LC 3)
Max Uplift5=-307(LC 7), 2=-247(LC 7)

FORCES (lb) - Maximum Compression/Maximum Tension
TOP CHORD 1-2=0/21, 2-7=-816/291, 7-8=-780/309, 3-8=-745/296, 3-9=-116/64, 4-9=-48/0, 4-5=-126/155
BOT CHORD 2-10=-392/728, 10-11=-392/728, 6-11=-392/728, 6-12=-392/728, 5-12=-392/728
WEBS 3-6=0/282, 3-5=-737/387

NOTES
1) Wind: ASCE 7-02; 125mph (3-second gust); h=25ft; TCDL=4.2psf; BCDL=6.0psf; Category II; Exp B; enclosed; MWFRS (low-rise); Lumber DOL=1.60 plate grip DOL=1.60.
2) This truss has been designed for a 10.0 psf bottom chord live load nonconcurrent with any other live loads.
3) Refer to girder(s) for truss to truss connections.
4) Provide mechanical connection (by others) of truss to bearing plate capable of withstanding 307 lb uplift at joint 5 and 247 lb uplift at joint 2.
5) Hanger(s) or other connection device(s) shall be provided sufficient to support concentrated load(s) 43 lb up at 4-4-0, 43 lb up at 4-4-0, 59 lb down and 122 lb up at 7-1-15, 59 lb down and 122 lb up at 7-1-15, and 48 lb down at 1-6-1, and 48 lb down at 1-6-1 on top chord, and 22 lb up at 1-6-1, 22 lb up at 1-6-1, 12 lb down at 4-4-0, 12 lb down at 4-4-0, and 52 lb down at 7-1-15, and 52 lb down at 7-1-15 on bottom chord. The design/selection of such connection device(s) is the responsibility of others.
6) In the LOAD CASE(S) section, loads applied to the face of the truss are noted as front (F) or back (B).

LOAD CASE(S) Standard
1) Regular: Lumber Increase=1.25, Plate Increase=1.25
Uniform Loads (plf)
Vert: 1-4=-46, 2-5=-40
Concentrated Loads (lb)
Vert: 8=8(F=4, B=4) 9=-118(F=-59, B=-59) 10=43(F=22, B=22) 11=-24(F=-12, B=-12) 12=-104(F=-52, B=-52)

This document was originally issued by Lassiter, Frank on November 21,2007. This is not considered a sealed document. Official sealed drawings are available upon request from the manufacturer indicated above.

November 21,2007

ENGINEERING BY TRENCO
A MiTek Affiliate
818 Soundside Road
Edenton, NC 27932

Job	Truss	Truss Type	Qty	Ply	AUSTIN_FL_125
AUSTIN	JSGRD1	SPECIAL	1	1	Job Reference (optional) E4530687

Maronda Homes Inc., Sanford, FL

7.020 s Nov 9 2007 MiTek Industries, Inc. Wed Nov 21 08:44:09 2007 Page 1

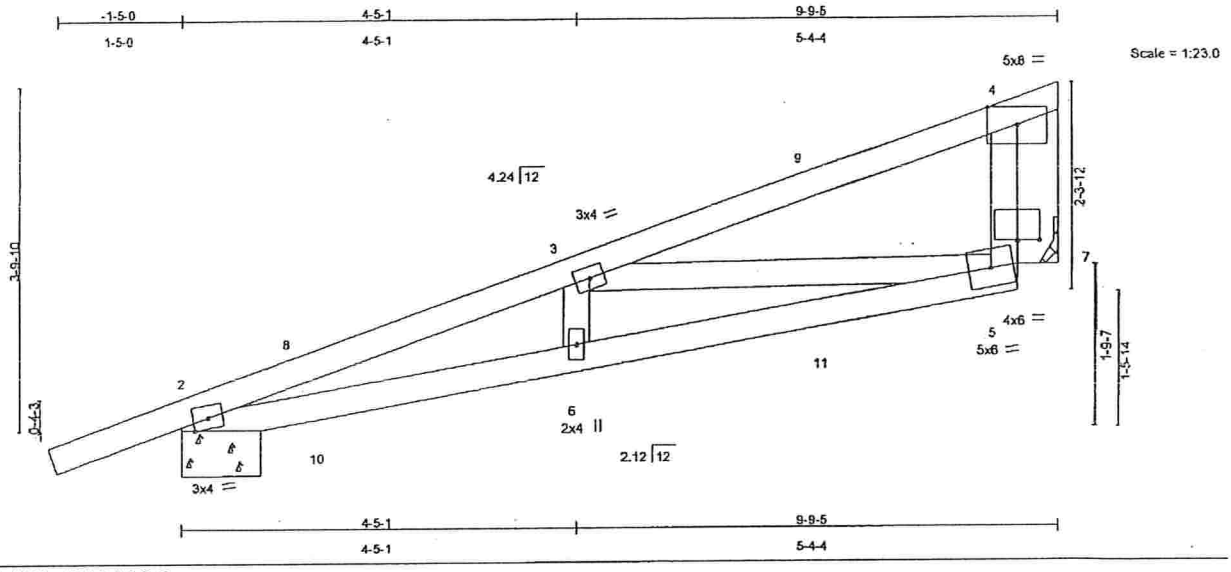

Plate Offsets (X,Y): [5:0-3-0,0-0-1]

LOADING (psf)		SPACING	2-0-0	CSI		DEFL	In	(loc)	l/defl	L/d	PLATES	GRIP
TCLL	16.0	Plates Increase	1.25	TC	0.41	Vert(LL)	-0.05	5-6	>999	240	MT20	244/190
TCDL	7.0	Lumber Increase	1.25	BC	0.48	Vert(TL)	-0.11	5-6	>999	180		
BCLL	10.0	Rep Stress Incr	NO	WB	0.30	Horz(TL)	0.02	7	n/a	n/a		
BCDL	10.0	Code FBC2004/TPI2002		(Matrix)							. Weight: 46 lb	

LUMBER
TOP CHORD 2 X 4 SYP No.2
BOT CHORD 2 X 4 SYP No.2
WEBS 2 X 4 SYP No.2
OTHERS 2 X 6 SYP No.2

BRACING
TOP CHORD Structural wood sheathing directly applied or 5-4-11 oc purlins, except end verticals.
BOT CHORD Rigid ceiling directly applied or 7-4-11 oc bracing.

REACTIONS (lb/size) 2=522/0-10-9, 7=516/Mechanical
Max Horz 2=165(LC 7)
Max Uplift2=-260(LC 7), 7=-305(LC 7)

FORCES (lb) - Maximum Compression/Maximum Tension
TOP CHORD 1-2=0/17, 2-8=-1374/611, 3-8=-1337/637, 3-9=-445/261, 4-9=-364/188, 4-5=-132/439
BOT CHORD 2-10=-696/1253, 6-10=-688/1266, 6-11=-711/1261, 5-11=-701/1300
WEBS 3-6=0/199, 3-5=-854/425, 4-7=-557/355, 5-7=-217/218

NOTES
1) Wind: ASCE 7-02; 125mph (3-second gust); h=25ft; TCDL=4.2psf; BCDL=6.0psf; Category II; Exp B; enclosed; MWFRS (low-rise); Lumber DOL=1.60 plate grip DOL=1.60.
2) This truss has been designed for a 10.0 psf bottom chord live load nonconcurrent with any other live loads.
3) Refer to girder(s) for truss to truss connections.
4) Bearing at joint(s) 2 considers parallel to grain value using ANSI/TPI 1 angle to grain formula. Building designer should verify capacity of bearing surface.
5) Provide mechanical connection (by others) of truss to bearing plate capable of withstanding 260 lb uplift at joint 2 and 305 lb uplift at joint 7.
6) Hanger(s) or other connection device(s) shall be provided sufficient to support concentrated load(s) 47 lb up at 4-4-0, 47 lb up at 4-4-0, 59 lb down and 126 lb up at 7-1-15, 59 lb down and 126 lb up at 7-1-15, and 44 lb down at 1-6-1, and 44 lb down at 1-6-1 on top chord, and 22 lb up at 1-6-1, 22 lb up at 1-6-1, 12 lb down at 4-4-0, 12 lb down at 4-4-0, and 52 lb down at 7-1-15, and 52 lb down at 7-1-15 on bottom chord. The design/selection of such connection device(s) is the responsibility of others.
7) In the LOAD CASE(S) section, loads applied to the face of the truss are noted as front (F) or back (B).

LOAD CASE(S) Standard
1) Regular: Lumber Increase=1.25, Plate Increase=1.25
Uniform Loads (plf)
Vert: 1-4=-46, 2-5=-40
Concentrated Loads (lb)
Vert: 3=8(F=4, B=4) 6=-24(F=-12, B=-12) 9=-118(F=-59, B=-59) 10=43(F=22, B=22) 11=-104(F=-52, B=-52)

This document was originally issued by Lassiter, Frank on November 21,2007. This is not considered a sealed document. Official sealed drawings are available upon request from the manufacturer indicated above.

November 21,2007

ENGINEERING BY TRENCO
A MiTek Affiliate
818 Soundside Road
Edenton, NC 27932

Job	Truss	Truss Type	Qty	Ply	AUSTIN_FL_125
AUSTIN	J	MONO TRUSS	29	1	E4530670 Job Reference (optional)

Maronda Homes Inc., Sanford, FL — 7.020 s Nov 9 2007 MiTek Industries, Inc. Wed Nov 21 08:44:03 2007 Page 1

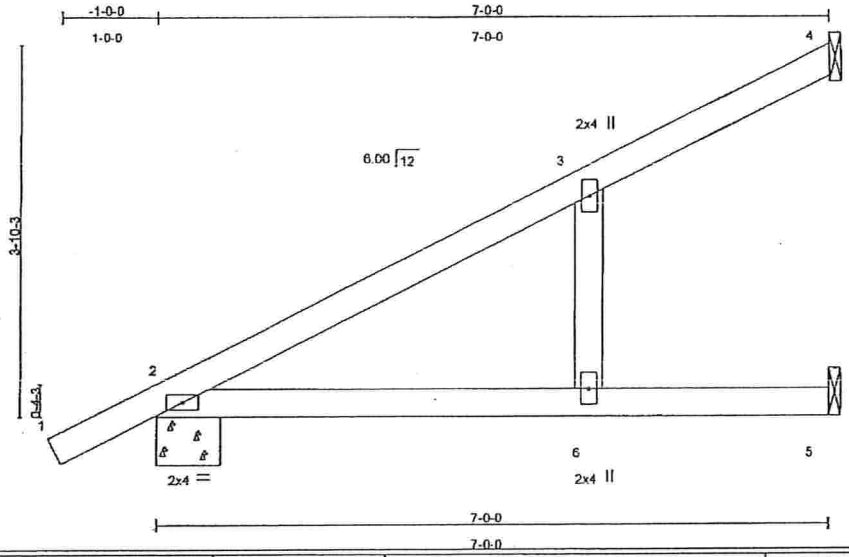

LOADING (psf)		SPACING 2-0-0		CSI		DEFL	in	(loc)	l/defl	L/d	PLATES	GRIP
TCLL	16.0	Plates Increase	1.25	TC	0.38	Vert(LL)	0.14	2-6	>578	240	MT20	244/190
TCDL	7.0	Lumber Increase	1.25	BC	0.45	Vert(TL)	-0.26	2-6	>306	180		
BCLL	10.0	Rep Stress Incr	YES	WB	0.02	Horz(TL)	0.01	4	n/a	n/a		
BCDL	10.0	Code FBC2004/TPI2002		(Matrix)							Weight: 27 lb	

LUMBER
TOP CHORD 2 X 4 SYP No.2
BOT CHORD 2 X 4 SYP No.2
WEBS 2 X 4 SYP No.2

BRACING
TOP CHORD Structural wood sheathing directly applied or 6-0-0 oc purlins.
BOT CHORD Rigid ceiling directly applied or 10-0-0 oc bracing.

REACTIONS (lb/size) 4=136/Mechanical, 2=355/0-8-0, 5=141/Mechanical
Max Horz 2=178(LC 6)
Max Uplift4=-64(LC 6), 2=-120(LC 6), 5=-34(LC 6)

FORCES (lb) - Maximum Compression/Maximum Tension
TOP CHORD 1-2=0/21, 2-3=-126/10, 3-4=-46/56
BOT CHORD 2-6=0/0, 5-6=0/0
WEBS 3-6=-14/132

NOTES (5)
1) Wind: ASCE 7-02; 125mph (3-second gust); h=25ft; TCDL=4.2psf; BCDL=6.0psf; Category II; Exp B; enclosed; MWFRS (low-rise) and C-C Interior(1) zone; Lumber DOL=1.60 plate grip DOL=1.60. This truss is designed for C-C for members and forces, and for MWFRS for reactions specified.
2) This truss has been designed for a 10.0 psf bottom chord live load nonconcurrent with any other live loads.
3) Refer to girder(s) for truss to truss connections.
4) Provide mechanical connection (by others) of truss to bearing plate capable of withstanding 64 lb uplift at joint 4, 120 lb uplift at joint 2 and 34 lb uplift at joint 5.
5) Attach with (2) 16d Common Toe-Nails (0.162"x3.5") at joints 4 and 5.

LOAD CASE(S) Standard

This document was originally issued by Lassiter, Frank on November 21,2007. This is not considered a sealed document. Official sealed drawings are available upon request from the manufacturer indicated above.

November 21,2007

ENGINEERING BY TRENCO
A MiTek Affiliate
818 Soundside Road
Edenton, NC 27932

Job	Truss	Truss Type	Qty	Ply	AUSTIN_FL_125
AUSTIN	JSA	SPECIAL	8	1	E4530686 Job Reference (optional)

Maronda Homes Inc., Sanford, FL

7.020 s Nov 9 2007 MiTek Industries, Inc. Wed Nov 21 08:44:08 2007 Page 1

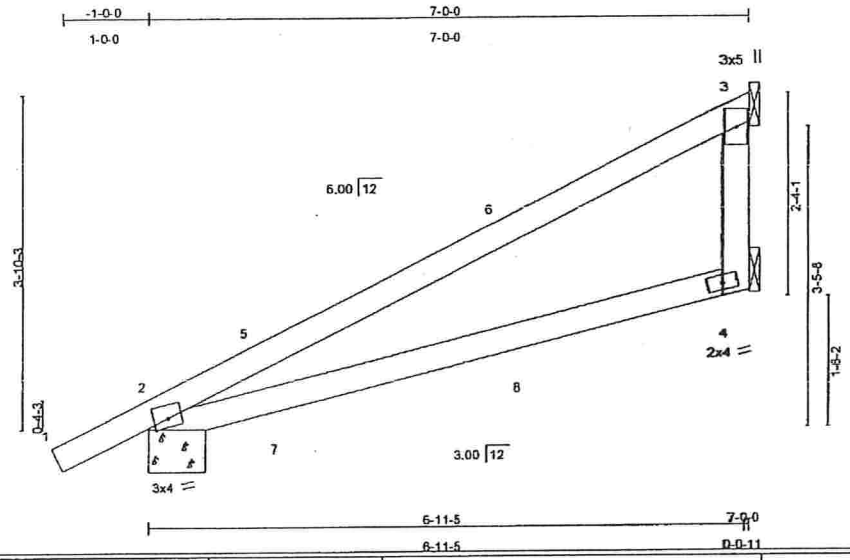

LOADING (psf)		SPACING	2-0-0	CSI		DEFL	In	(loc)	l/defl	L/d	PLATES	GRIP
TCLL	16.0	Plates Increase	1.25	TC	0.49	Vert(LL)	-0.10	2-4	>754	240	MT20	244/190
TCDL	7.0	Lumber Increase	1.25	BC	0.45	Vert(TL)	-0.26	2-4	>302	180		
BCLL	10.0	Rep Stress Incr	YES	WB	0.00	Horz(TL)	-0.00	3	n/a	n/a		
BCDL	10.0	Code FBC2004/TPI2002		(Matrix)							Weight: 27 lb	

LUMBER
TOP CHORD 2 X 4 SYP No.2
BOT CHORD 2 X 4 SYP No.2
WEBS 2 X 4 SYP No.2

BRACING
TOP CHORD Structural wood sheathing directly applied or 6-0-0 oc purlins.
BOT CHORD Rigid ceiling directly applied or 6-0-0 oc bracing.

REACTIONS (lb/size) 2=338/0-8-0, 3=155/Mechanical, 4=143/Mechanical
Max Horz 2=174(LC 6)
Max Uplift2=-122(LC 8), 3=-191(LC 8)

FORCES (lb) - Maximum Compression/Maximum Tension
TOP CHORD 1-2=0/18, 2-5=-120/0, 5-6=-93/0, 3-6=-101/60
BOT CHORD 2-7=-21/0, 7-8=-0/0, 4-8=0/28
WEBS 3-4=0/0

NOTES (8)
1) Wind: ASCE 7-02; 125mph (3-second gust); h=25ft; TCDL=4.2psf; BCDL=6.0psf; Category II; Exp B; enclosed; MWFRS (low-rise) and C-C Interior(1) zone; Lumber DOL=1.60 plate grip DOL=1.60. This truss is designed for C-C for members and forces, and for MWFRS for reactions specified.
2) This truss has been designed for a 10.0 psf bottom chord live load nonconcurrent with any other live loads.
3) Refer to girder(s) for truss to truss connections.
4) Bearing at joint(s) 2 considers parallel to grain value using ANSI/TPI 1 angle to grain formula. Building designer should verify capacity of bearing surface.
5) Provide mechanical connection (by others) of truss to bearing plate capable of withstanding 122 lb uplift at joint 2 and 191 lb uplift at joint 3.
6) Hanger(s) or other connection device(s) shall be provided sufficient to support concentrated load(s) 9 lb down and 57 lb up at 4-4-0, 9 lb down and 57 lb up at 4-4-0, and 47 lb down at 1-6-1, and 47 lb down at 1-6-1 on top chord, and 21 lb up at 1-6-1, 21 lb up at 1-6-1, and 17 lb down at 4-4-0, and 17 lb down at 4-4-0 on bottom chord. The design/selection of such connection device(s) is the responsibility of others.
7) In the LOAD CASE(S) section, loads applied to the face of the truss are noted as front (F) or back (B).
8) Attach with (2) 16d Common Toe-Nails (0.162"x3.5") at joints 3 and 4.

LOAD CASE(S) Standard
1) Regular: Lumber Increase=1.25, Plate Increase=1.25
Uniform Loads (plf)
Vert: 1-3=-46, 2-4=-40
Concentrated Loads (lb)
Vert: 6=-19(F=-9, B=-9) 7=41(F=21, B=21) 8=-33(F=-17, B=-17)

This document was originally issued by Lassiter, Frank on November 21,2007. This is not considered a sealed document. Official sealed drawings are available upon request from the manufacturer indicated above.
November 21,2007

ENGINEERING BY TRENCO
A MiTek Affiliate
818 Soundside Road
Edenton, NC 27932

Job	Truss	Truss Type	Qty	Ply	AUSTIN_FL_125
AUSTIN	J1	JACK	6	1	E4530671 Job Reference (optional)

Maronda Homes Inc., Sanford, FL

7.020 s Nov 9 2007 MiTek Industries, Inc. Wed Nov 21 08:44:03 2007 Page 1

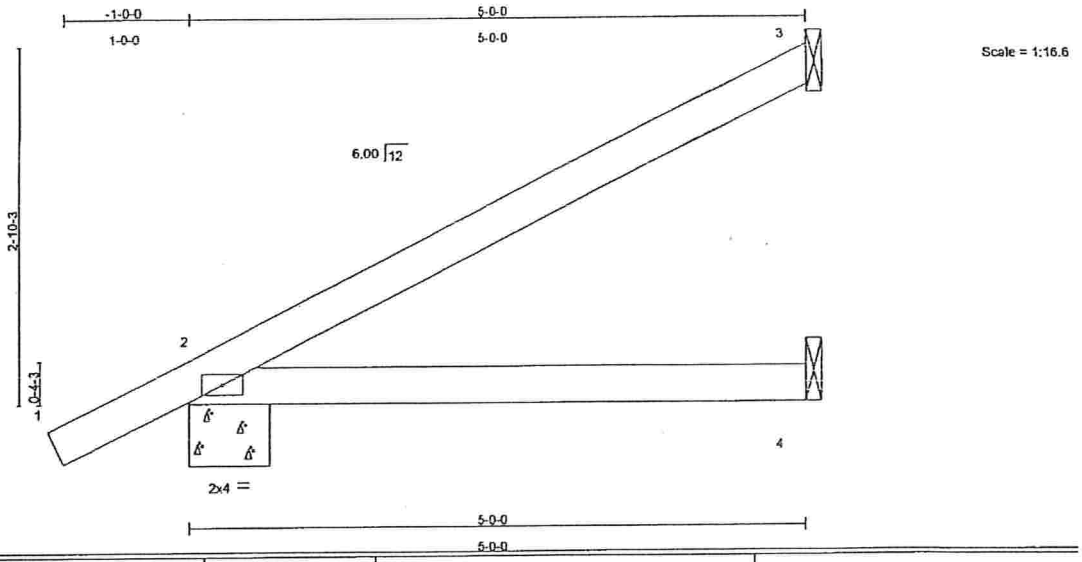

LOADING (psf)		SPACING	2-0-0	CSI		DEFL	in	(loc)	l/defl	L/d	PLATES	GRIP
TCLL	16.0	Plates Increase	1.25	TC	0.18	Vert(LL)	-0.02	2-4	>999	240	MT20	244/190
TCDL	7.0	Lumber Increase	1.25	BC	0.20	Vert(TL)	-0.06	2-4	>937	180		
BCLL	10.0	Rep Stress Incr	YES	WB	0.00	Horz(TL)	-0.00	3	n/a	n/a		
BCDL	10.0	Code FBC2004/TPI2002		(Matrix)							Weight: 18 lb	

LUMBER
TOP CHORD 2 X 4 SYP No.2
BOT CHORD 2 X 4 SYP No.2

BRACING
TOP CHORD Structural wood sheathing directly applied or 5-0-0 oc purlins.
BOT CHORD Rigid ceiling directly applied or 10-0-0 oc bracing.

REACTIONS (lb/size) 3=96/Mechanical, 2=272/0-8-0, 4=92/Mechanical
Max Horz 2=136(LC 6)
Max Uplift3=-91(LC 6), 2=-114(LC 6)

FORCES (lb) - Maximum Compression/Maximum Tension
TOP CHORD 1-2=0/21, 2-3=-72/36
BOT CHORD 2-4=0/0

NOTES (5)
1) Wind: ASCE 7-02; 125mph (3-second gust); h=25ft; TCDL=4.2psf; BCDL=6.0psf; Category II; Exp B; enclosed; MWFRS (low-rise) and C-C Interior(1) zone; Lumber DOL=1.60 plate grip DOL=1.60. This truss is designed for C-C for members and forces, and for MWFRS for reactions specified.
2) This truss has been designed for a 10.0 psf bottom chord live load nonconcurrent with any other live loads.
3) Refer to girder(s) for truss to truss connections.
4) Provide mechanical connection (by others) of truss to bearing plate capable of withstanding 91 lb uplift at joint 3 and 114 lb uplift at joint 2.
5) Attach with (2) 16d Common Toe-Nails (0.162"x3.5") at joints 3 and 4.

LOAD CASE(S) Standard

This document was originally issued by Lassiter, Frank on November 21,2007. This is not considered a sealed document. Official sealed drawings are available upon request from the manufacturer indicated above.

November 21,2007

ENGINEERING BY TRENCO
A MiTek Affiliate
818 Soundside Road
Edenton, NC 27932

Job	Truss	Truss Type	Qty	Ply	AUSTIN_FL_125
AUSTIN	J2	JACK	8	1	E4530672 Job Reference (optional)

Maronda Homes Inc., Sanford, FL

7.020 s Nov 9 2007 MiTek Industries, Inc. Wed Nov 21 08:44:03 2007 Page 1

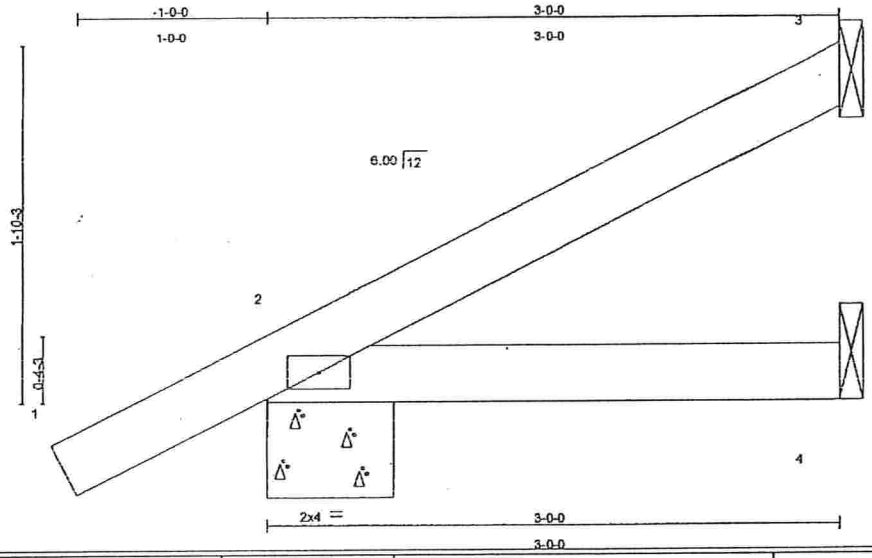

LOADING (psf)		SPACING	2-0-0	CSI		DEFL	In	(loc)	l/defl	L/d	PLATES	GRIP
TCLL	16.0	Plates Increase	1.25	TC	0.15	Vert(LL)	-0.00	2-4	>999	240	MT20	244/190
TCDL	7.0	Lumber Increase	1.25	BC	0.06	Vert(TL)	-0.01	2-4	>999	180		
BCLL	10.0	Rep Stress Incr	YES	WB	0.00	Horz(TL)	-0.00	3	n/a	n/a		
BCDL	10.0	Code FBC2004/TPI2002		(Matrix)							Weight: 11 lb	

LUMBER
TOP CHORD 2 X 4 SYP No.2
BOT CHORD 2 X 4 SYP No.2

BRACING
TOP CHORD Structural wood sheathing directly applied or 3-0-0 oc purlins.
BOT CHORD Rigid ceiling directly applied or 10-0-0 oc bracing.

REACTIONS (lb/size) 3=43/Mechanical, 2=194/0-8-0, 4=52/Mechanical
Max Horz 2=95(LC 6)
Max Uplift3=-37(LC 6), 2=-113(LC 6)

FORCES (lb) - Maximum Compression/Maximum Tension
TOP CHORD 1-2=0/21, 2-3=-39/15
BOT CHORD 2-4=0/0

NOTES (5)
1) Wind: ASCE 7-02; 125mph (3-second gust); h=25ft; TCDL=4.2psf; BCDL=6.0psf; Category II; Exp B; enclosed; MWFRS (low-rise) and C-C Interior(1) zone; Lumber DOL=1.60 plate grip DOL=1.60. This truss is designed for C-C for members and forces, and for MWFRS for reactions specified.
2) This truss has been designed for a 10.0 psf bottom chord live load nonconcurrent with any other live loads.
3) Refer to girder(s) for truss to truss connections.
4) Provide mechanical connection (by others) of truss to bearing plate capable of withstanding 37 lb uplift at joint 3 and 113 lb uplift at joint 2.
5) Attach with (2) 16d Common Toe-Nails (0.162"x3.5") at joints 3 and 4.

LOAD CASE(S) Standard

This document was originally issued by Lassiter, Frank on November 21,2007. This is not considered a sealed document. Official sealed drawings are available upon request from the manufacturer indicated above.

November 21,2007

ENGINEERING BY TRENCO
A MiTek Affiliate
818 Soundside Road
Edenton, NC 27932

Job	Truss	Truss Type	Qty	Ply	AUSTIN_FL_125
AUSTIN	J3	JACK	8	1	Job Reference (optional)

E4530673

Maronda Homes Inc., Sanford, FL

7.020 s Nov 9 2007 MiTek Industries, Inc. Wed Nov 21 08:44:04 2007 Page 1

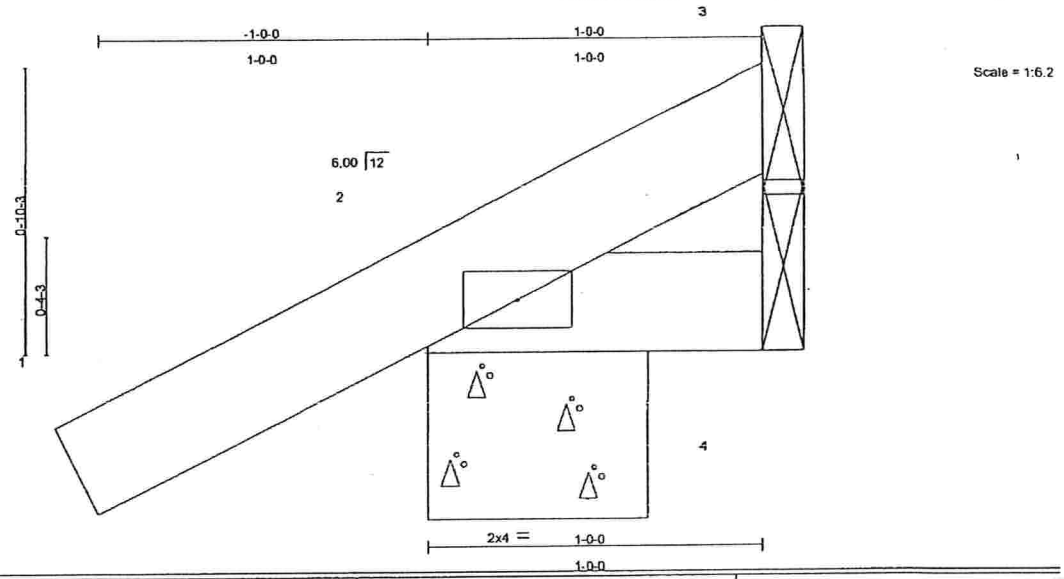

LOADING (psf)		SPACING	2-0-0	CSI		DEFL	in	(loc)	l/defl	L/d	PLATES	GRIP
TCLL	16.0	Plates Increase	1.25	TC	0.11	Vert(LL)	-0.00	2	>999	240	MT20	244/190
TCDL	7.0	Lumber Increase	1.25	BC	0.01	Vert(TL)	-0.00	2	>999	180		
BCLL	10.0	Rep Stress Incr	YES	WB	0.00	Horz(TL)	0.00	3	n/a	n/a		
BCDL	10.0	Code FBC2004/TPI2002		(Matrix)							Weight: 5 lb	

LUMBER
TOP CHORD 2 X 4 SYP No.2
BOT CHORD 2 X 4 SYP No.2

BRACING
TOP CHORD Structural wood sheathing directly applied or 1-0-0 oc purlins.
BOT CHORD Rigid ceiling directly applied or 10-0-0 oc bracing.

REACTIONS (lb/size) 2=124/0-8-0, 4=18/Mechanical, 3=-11/Mechanical
Max Horz 2=54(LC 6)
Max Uplift2=-116(LC 6), 3=-11(LC 1)
Max Grav 2=124(LC 1), 4=18(LC 1), 3=27(LC 6)

FORCES (lb) - Maximum Compression/Maximum Tension
TOP CHORD 1-2=0/21, 2-3=-27/26
BOT CHORD 2-4=0/0

NOTES (5)
1) Wind: ASCE 7-02; 125mph (3-second gust); h=25ft; TCDL=4.2psf; BCDL=6.0psf; Category II; Exp B; enclosed; MWFRS (low-rise) and C-C Interior(1) zone; Lumber DOL=1.60 plate grip DOL=1.60. This truss is designed for C-C for members and forces, and for MWFRS for reactions specified.
2) This truss has been designed for a 10.0 psf bottom chord live load nonconcurrent with any other live loads.
3) Refer to girder(s) for truss to truss connections.
4) Provide mechanical connection (by others) of truss to bearing plate capable of withstanding 116 lb uplift at joint 2 and 11 lb uplift at joint 3.
5) Attach with (2) 16d Common Toe-Nails (0.162"x3.5") at joints 3 and 4.

LOAD CASE(S) Standard

This document was originally issued by Lassiter, Frank on November 21,2007. This is not considered a sealed document. Official sealed drawings are available upon request from the manufacturer indicated above.

November 21,2007

ENGINEERING BY TRENCO
A MiTek Affiliate
818 Soundside Road
Edenton, NC 27932

Job	Truss	Truss Type	Qty	Ply	AUSTIN_FL_125	
AUSTIN	JS1	SPECIAL	2	1	Job Reference (optional)	E4530663

Maronda Homes Inc., Sanford, FL

7.020 s Nov 9 2007 MiTek Industries, Inc. Wed Nov 21 08:44:07 2007 Page 1

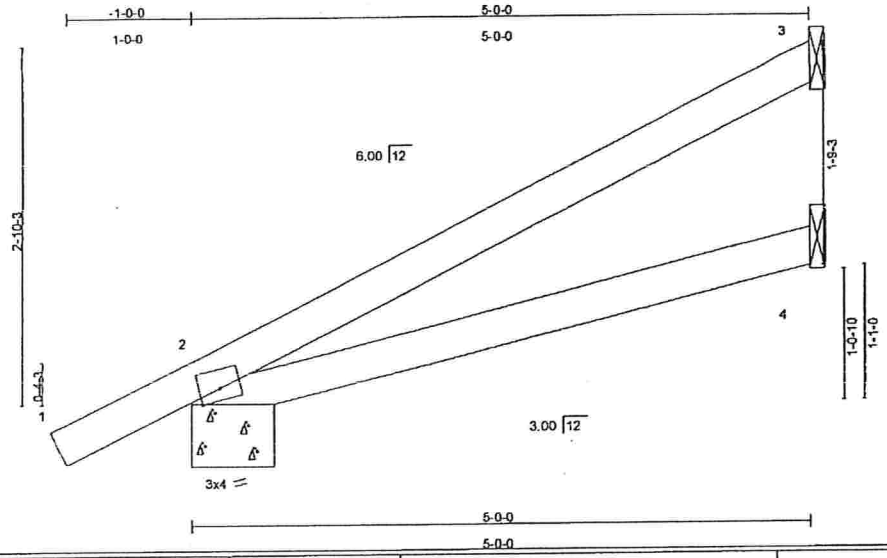

LOADING (psf)		SPACING	2-0-0	CSI		DEFL	in	(loc)	l/defl	L/d	PLATES	GRIP
TCLL	16.0	Plates Increase	1.25	TC	0.18	Vert(LL)	-0.02	2-4	>999	240	MT20	244/190
TCDL	7.0	Lumber Increase	1.25	BC	0.20	Vert(TL)	-0.06	2-4	>909	180		
BCLL	10.0	Rep Stress Incr	YES	WB	0.00	Horz(TL)	-0.00	3	n/a	n/a		
BCDL	10.0	Code FBC2004/TPI2002		(Matrix)							Weight: 18 lb	

LUMBER
TOP CHORD 2 X 4 SYP No.2
BOT CHORD 2 X 4 SYP No.2

BRACING
TOP CHORD Structural wood sheathing directly applied or 5-0-0 oc purlins.
BOT CHORD Rigid ceiling directly applied or 10-0-0 oc bracing.

REACTIONS (lb/size) 3=96/Mechanical, 2=272/0-8-0, 4=92/Mechanical
Max Horz 2=134(LC 6)
Max Uplift3=-93(LC 6), 2=-111(LC 6)

FORCES (lb) - Maximum Compression/Maximum Tension
TOP CHORD 1-2=0/18, 2-3=-75/37
BOT CHORD 2-4=-18/18

NOTES (6)
1) Wind: ASCE 7-02; 125mph (3-second gust); h=25ft; TCDL=4.2psf; BCDL=6.0psf; Category II; Exp B; enclosed; MWFRS (low-rise) and C-C Interior(1) zone; Lumber DOL=1.60 plate grip DOL=1.60. This truss is designed for C-C for members and forces, and for MWFRS for reactions specified.
2) This truss has been designed for a 10.0 psf bottom chord live load nonconcurrent with any other live loads.
3) Refer to girder(s) for truss to truss connections.
4) Bearing at joint(s) 2 considers parallel to grain value using ANSI/TPI 1 angle to grain formula. Building designer should verify capacity of bearing surface.
5) Provide mechanical connection (by others) of truss to bearing plate capable of withstanding 93 lb uplift at joint 3 and 111 lb uplift at joint 2.
6) Attach with (2) 16d Common Toe-Nails (0.162"x3.5") at joints 3 and 4.

LOAD CASE(S) Standard

This document was originally issued by Lassiter, Frank on November 21,2007. This is not considered a sealed document. Official sealed drawings are available upon request from the manufacturer indicated above.

November 21,2007

ENGINEERING BY TRENCO
A MiTek Affiliate
818 Soundside Road
Edenton, NC 27932

Job	Truss	Truss Type	Qty	Ply	AUSTIN_FL_125
AUSTIN	JS2	SPECIAL	2	1	E4530684 Job Reference (optional)

Maronde Homes Inc., Sanford, FL

7.020 s Nov 9 2007 MiTek Industries, Inc. Wed Nov 21 08:44:07 2007 Page 1

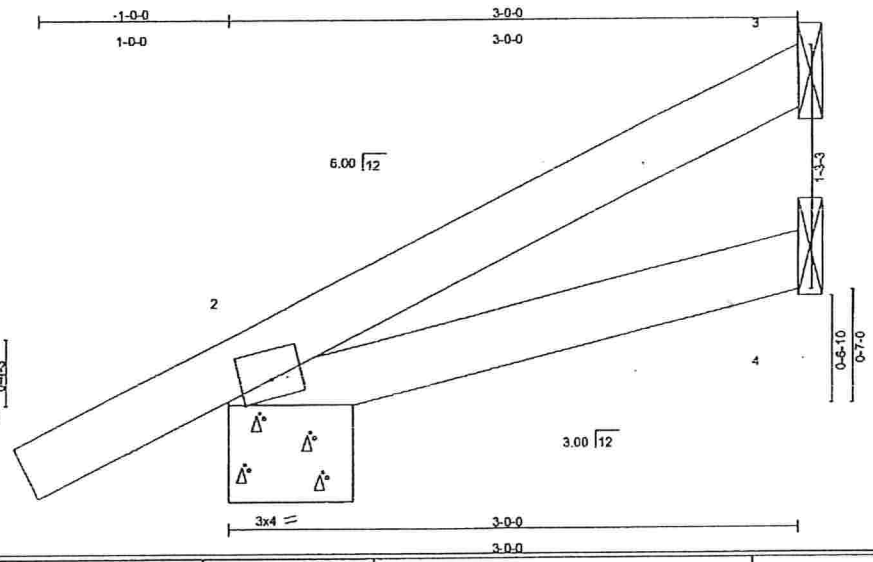

LOADING (psf)		SPACING	2-0-0	CSI		DEFL	In	(loc)	l/defl	L/d	PLATES	GRIP
TCLL	16.0	Plates Increase	1.25	TC	0.15	Vert(LL)	-0.00	2-4	>999	240	MT20	244/190
TCDL	7.0	Lumber Increase	1.25	BC	0.06	Vert(TL)	-0.01	2-4	>999	180		
BCLL	10.0	Rep Stress Incr	YES	WB	0.00	Horz(TL)	-0.00	3	n/a	n/a		
BCDL	10.0	Code FBC2004/TPI2002		(Matrix)							Weight: 12 lb	

LUMBER
TOP CHORD 2 X 4 SYP No.2
BOT CHORD 2 X 4 SYP No.2

BRACING
TOP CHORD Structural wood sheathing directly applied or 3-0-0 oc purlins.
BOT CHORD Rigid ceiling directly applied or 10-0-0 oc bracing.

REACTIONS (lb/size) 3=43/Mechanical, 2=194/0-8-0, 4=52/Mechanical
Max Horz 2=93(LC 6)
Max Uplift3=-40(LC 6), 2=-110(LC 6)

FORCES (lb) - Maximum Compression/Maximum Tension
TOP CHORD 1-2=0/18, 2-3=-40/16
BOT CHORD 2-4=-10/10

NOTES (6)
1) Wind: ASCE 7-02; 125mph (3-second gust); h=25ft; TCDL=4.2psf; BCDL=6.0psf; Category II; Exp B; enclosed; MWFRS (low-rise) and C-C Interior(1) zone; Lumber DOL=1.60 plate grip DOL=1.60. This truss is designed for C-C for members and forces, and for MWFRS for reactions specified.
2) This truss has been designed for a 10.0 psf bottom chord live load nonconcurrent with any other live loads.
3) Refer to girder(s) for truss to truss connections.
4) Bearing at joint(s) 2 considers parallel to grain value using ANSI/TPI 1 angle to grain formula. Building designer should verify capacity of bearing surface.
5) Provide mechanical connection (by others) of truss to bearing plate capable of withstanding 40 lb uplift at joint 3 and 110 lb uplift at joint 2.
6) Attach with (2) 16d Common Toe-Nails (0.162"x3.5") at joints 3 and 4.

LOAD CASE(S) Standard

This document was originally issued by Lassiter, Frank on November 21,2007. This is not considered a sealed document. Official sealed drawings are available upon request from the manufacturer indicated above.

November 21,2007

ENGINEERING BY TRENCO
A MiTek Affiliate
818 Soundside Road
Edenton, NC 27932

Job	Truss	Truss Type	Qty	Ply	AUSTIN_FL_125
AUSTIN	JS3	SPECIAL	2	1	Job Reference (optional)

E4530665

Maronda Homes Inc., Sanford, FL

7.020 s Nov 9 2007 MiTek Industries, Inc. Wed Nov 21 08:44:08 2007 Page 1

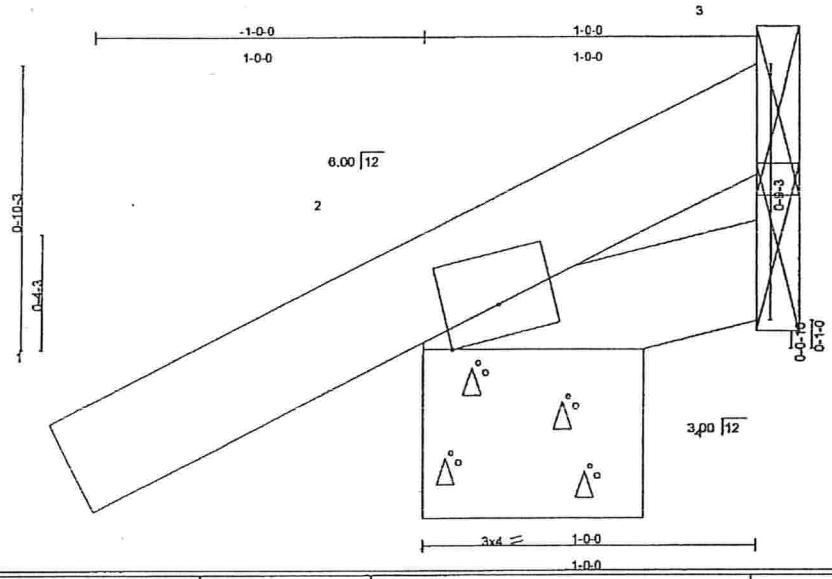

LOADING (psf)		SPACING	2-0-0	CSI		DEFL	in	(loc)	l/defl	L/d	PLATES	GRIP
TCLL	18.0	Plates Increase	1.25	TC	0.10	Vert(LL)	-0.00	2	>999	240	MT20	244/190
TCDL	7.0	Lumber Increase	1.25	BC	0.01	Vert(TL)	-0.00	2	>999	180		
BCLL	10.0	Rep Stress Incr	YES	WB	0.00	Horz(TL)	0.00	3	n/a	n/a		
BCDL	10.0	Code FBC2004/TPI2002		(Matrix)							Weight: 5 lb	

LUMBER
TOP CHORD 2 X 4 SYP No.2
BOT CHORD 2 X 4 SYP No.2

BRACING
TOP CHORD Structural wood sheathing directly applied or 1-0-0 oc purlins.
BOT CHORD Rigid ceiling directly applied or 10-0-0 oc bracing.

REACTIONS (lb/size) 2=124/0-8-0, 4=18/Mechanical, 3=-11/Mechanical
Max Horz 2=51(LC 6)
Max Uplift2=-108(LC 6), 3=-11(LC 1)
Max Grav2=124(LC 1), 4=18(LC 1), 3=18(LC 6)

FORCES (lb) - Maximum Compression/Maximum Tension
TOP CHORD 1-2=0/15, 2-3=-32/24
BOT CHORD 2-4=-4/4

NOTES (6)
1) Wind: ASCE 7-02; 125mph (3-second gust); h=25ft; TCDL=4.2psf; BCDL=6.0psf; Category II; Exp B; enclosed; MWFRS (low-rise) and C-C Interior(1) zone; Lumber DOL=1.60 plate grip DOL=1.60. This truss is designed for C-C for members and forces, and for MWFRS for reactions specified.
2) This truss has been designed for a 10.0 psf bottom chord live load nonconcurrent with any other live loads.
3) Refer to girder(s) for truss to truss connections.
4) Bearing at joint(s) 2 considers parallel to grain value using ANSI/TPI 1 angle to grain formula. Building designer should verify capacity of bearing surface.
5) Provide mechanical connection (by others) of truss to bearing plate capable of withstanding 108 lb uplift at joint 2 and 11 lb uplift at joint 3.
6) Attach with (2) 16d Common Toe-Nails (0.162"x3.5") at joints 3 and 4.

LOAD CASE(S) Standard

This document was originally issued by Lassiter, Frank on November 21,2007. This is not considered a sealed document. Official sealed drawings are available upon request from the manufacturer indicated above.

November 21,2007

ENGINEERING BY TRENCO
A MiTek Affiliate
818 Soundside Road
Edenton, NC 27932

Job	Truss	Truss Type	Qty	Ply	AUSTIN_FL_125	
AUSTIN	CGRD1	HIP	1	1	Job Reference (optional)	E4530646

Maronda Homes Inc., Sanford, FL

7.020 s Nov 9 2007 MiTek Industries, Inc. Wed Nov 21 08:43:45 2007 Page 1

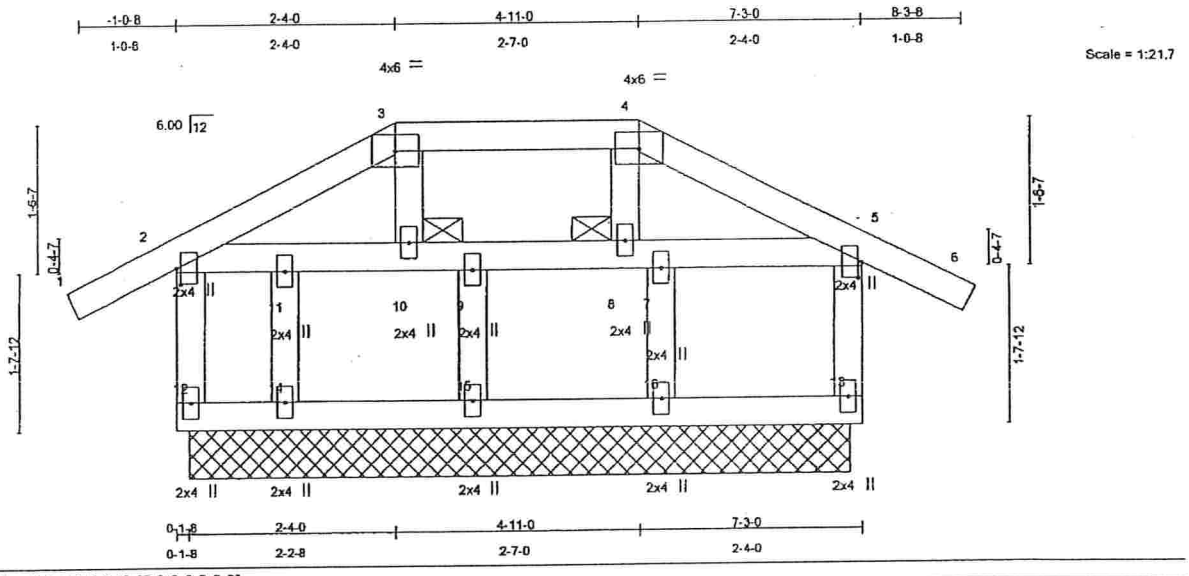

Plate Offsets (X,Y): [2:0-2-0,0-0-8], [5:0-2-0,0-0-8]

LOADING (psf)		SPACING	2-0-0	CSI		DEFL	in	(loc)	l/defl	L/d	PLATES	GRIP
TCLL	16.0	Plates Increase	1.25	TC	0.08	Vert(LL)	0.00	5-6	n/r	120	MT20	244/190
TCDL	7.0	Lumber Increase	1.25	BC	0.46	Vert(TL)	-0.00	5-6	n/r	120		
BCLL	10.0	Rep Stress Incr	NO	WB	0.05	Horz(TL)	-0.00	13	n/a	n/a		
BCDL	10.0	Code FBC2004/TPI2002		(Matrix)							Weight: 50 lb	

LUMBER
TOP CHORD 2 X 4 SYP No.2
BOT CHORD 2 X 4 SYP No.2
WEBS 2 X 4 SYP No.2

BRACING
TOP CHORD Structural wood sheathing directly applied or 6-0-0 oc purlins.
BOT CHORD Rigid ceiling directly applied or 10-0-0 oc bracing.
JOINTS 1 Brace at Jt(s): 10, 8

REACTIONS (lb/size) 12=158/7-0-0, 13=158/7-0-0, 14=67/7-0-0, 15=159/7-0-0, 16=159/7-0-0
Max Horz 12=43(LC 5)
Max Uplift12=-364(LC 7), 13=-117(LC 8), 14=-376(LC 8), 15=-88(LC 7), 16=-45(LC 7)
Max Grav 12=228(LC 6), 13=159(LC 10), 14=391(LC 5), 15=187(LC 10), 16=170(LC 10)

FORCES (lb) - Maximum Compression/Maximum Tension
TOP CHORD 1-2=0/21, 2-3=-78/97, 3-4=-53/102, 4-5=-97/101, 5-6=0/21
BOT CHORD 2-11=-68/119, 10-11=-64/114, 9-10=-64/120, 8-9=-64/120, 7-8=-63/115, 5-7=-63/114
WEBS 3-10=-84/65, 4-8=-93/67, 12-14=-20/15, 14-15=-20/15, 15-16=-20/15, 13-16=-20/15, 2-12=-230/367, 11-14=-391/376, 9-15=-187/88, 7-16=-170/45, 5-13=-160/118

NOTES
1) Unbalanced roof live loads have been considered for this design.
2) Wind: ASCE 7-02; 125mph (3-second gust); h=25ft; TCDL=4.2psf; BCDL=6.0psf; Category II; Exp B; enclosed; MWFRS (low-rise); Lumber DOL=1.60 plate grip DOL=1.60.
3) Provide adequate drainage to prevent water ponding.
4) This truss has been designed for a 10.0 psf bottom chord live load nonconcurrent with any other live loads.
5) Provide mechanical connection (by others) of truss to bearing plate capable of withstanding 364 lb uplift at joint 12, 117 lb uplift at joint 13, 376 lb uplift at joint 14, 88 lb uplift at joint 15 and 45 lb uplift at joint 16.
6) Non Standard bearing condition. Review required.
7) Hanger(s) or other connection device(s) shall be provided sufficient to support concentrated load(s) 37 lb down and 11 lb up at 2-4-0, and 37 lb down and 11 lb up at 4-11-0 on top chord, and 3 lb up at 2-4-0, and 3 lb up at 4-11-0 on bottom chord. The design/selection of such connection device(s) is the responsibility of others.
8) In the LOAD CASE(S) section, loads applied to the face of the truss are noted as front (F) or back (B).

LOAD CASE(S) Standard
1) Regular: Lumber Increase=1.25, Plate Increase=1.25
Uniform Loads (plf)
Vert: 1-3=-46, 3-4=-46, 4-6=-46, 2-5=-40
Concentrated Loads (lb)
Vert: 3=11(F) 4=11(F) 10=3(F) 8=3(F)

This document was originally issued by Lassiter, Frank on November 21,2007. This is not considered a sealed document. Official sealed drawings are available upon request from the manufacturer indicated above.

November 21,2007

ENGINEERING BY TRENCO
A MiTek Affiliate
818 Soundside Road
Edenton, NC 27932

Job	Truss	Truss Type	Qty	Ply	AUSTIN_FL_125	E4595117
AUSTIN	JGRD2	JACK	2	1	Job Reference (optional)	

Maronda Homes Inc., Sanford, Florida

7.020 s Nov 9 2007 MiTek Industries, Inc. Thu Jan 03 16:55:15 2008 Page 1

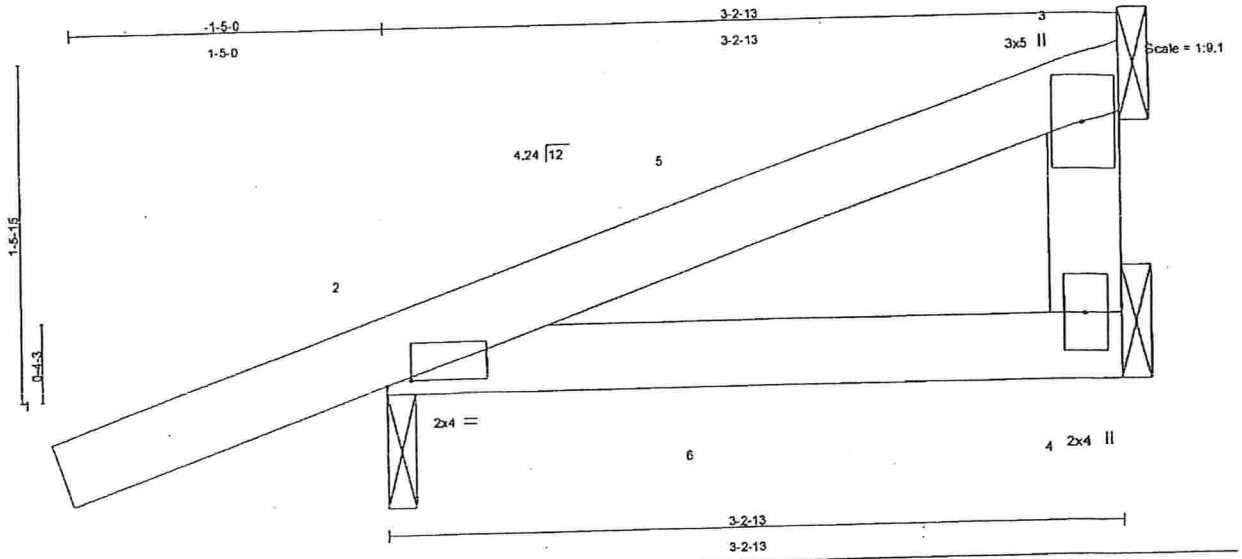

Plate Offsets (X,Y): [2:0-1-4,0-0-4]

LOADING (psf)		SPACING	2-0-0	CSI		DEFL	in	(loc)	l/defl	L/d	PLATES	GRIP
TCLL	16.0	Plates Increase	1.25	TC	0.12	Vert(LL)	0.01	2-4	>999	240	MT20	244/190
TCDL	7.0	Lumber Increase	1.25	BC	0.04	Vert(TL)	-0.00	2-4	>999	180		
BCLL	10.0	Rep Stress Incr	NO	WB	0.00	Horz(TL)	-0.00	3	n/a	n/a		
BCDL	10.0	Code FBC2004/TPI2002		(Matrix)							Weight: 14 lb	

LUMBER
TOP CHORD 2 X 4 SYP No.2
BOT CHORD 2 X 4 SYP No.2
WEBS 2 X 4 SYP No.2

BRACING
TOP CHORD Structural wood sheathing directly applied or 3-2-13 oc purlins.
BOT CHORD Rigid ceiling directly applied or 10-0-0 oc bracing.

REACTIONS (lb/size) 3=52/Mechanical, 2=196/0-1-8, 4=40/Mechanical
Max Horz 2=78(LC 3)
Max Uplift3=-15(LC 8), 2=-160(LC 7), 4=-31(LC 3)

FORCES (lb) - Maximum Compression/Maximum Tension
TOP CHORD 1-2=0/21, 2-5=-39/0, 3-5=-10/13
BOT CHORD 2-6=0/0, 4-6=0/0
WEBS 3-4=0/0

NOTES (9)
1) Wind: ASCE 7-02; 125mph (3-second gust); h=25ft; TCDL=4.2psf; BCDL=6.0psf; Category II; Exp B; enclosed; MWFRS (low-rise); porch left and right exposed; Lumber DOL=1.60 plate grip DOL=1.60.
2) This truss has been designed for a 10.0 psf bottom chord live load nonconcurrent with any other live loads.
3) Refer to girder(s) for truss to truss connections.
4) Provide mechanical connection (by others) of truss to bearing plate at joint(s) 2.
5) Provide mechanical connection (by others) of truss to bearing plate capable of withstanding 15 lb uplift at joint 3, 160 lb uplift at joint 2 and 31 lb uplift at joint 4.
6) Gap between inside of top chord bearing and first diagonal or vertical web shall not exceed 0.500in.
7) Hanger(s) or other connection device(s) shall be provided sufficient to support concentrated load(s) 48 lb down at 1-6-1, and 48 lb down at 1-6-1 on top chord, and 22 lb up at 1-6-1, and 22 lb up at 1-6-1 on bottom chord. The design/selection of such connection device(s) is the responsibility of others.
8) In the LOAD CASE(S) section, loads applied to the face of the truss are noted as front (F) or back (B).
9) Attach with (2) 16d Common Toe-Nails (0.162"x3.5") at joints 3 and 4.

LOAD CASE(S) Standard
1) Regular: Lumber Increase=1.25, Plate Increase=1.25
Uniform Loads (plf)
Vert: 1-3=-46, 2-4=-40
Concentrated Loads (lb)
Vert: 6=43(F=22, B=22)

MARVIN A. STRZYZEWSKI LICENSE No. 43144 STATE OF FLORIDA PROFESSIONAL ENGINEER

Marvin A. Strzyzewski, FL Lic. #43144
Truss Engineering Co.
818 Soundside Road
Edenton, NC 27932
FL COA #7239

January 4,2008

ENGINEERING BY TRENCO A MiTek Affiliate
818 Soundside Road
Edenton, NC 27932

Job	Truss	Truss Type	Qty	Ply	AUSTIN_FL_125	E4585119
AUSTIN	J3A	JACK	4	1	Job Reference (optional)	

Maronda Homes Inc., Sanford, Florida

7.020 s Nov 9 2007 MiTek Industries, Inc. Thu Jan 03 16:55:15 2008 Page 1

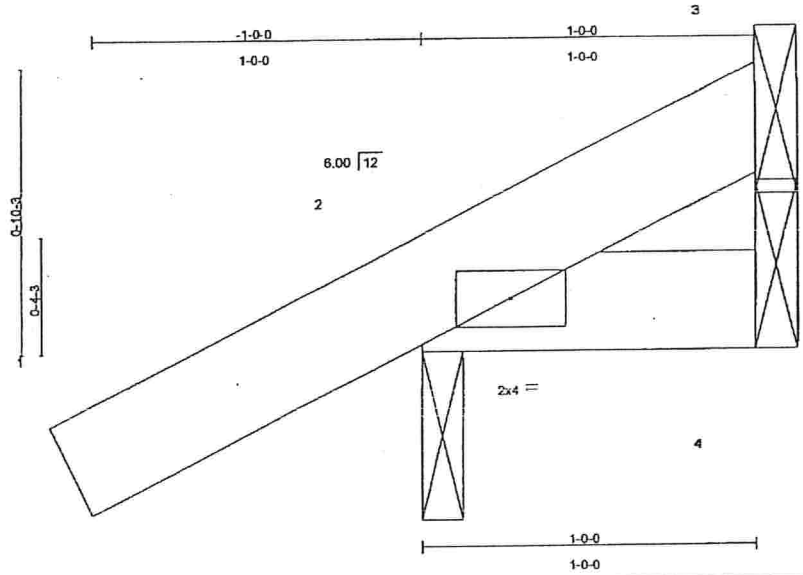

Plate Offsets (X,Y): [2:0-0-0,0-0-0]

LOADING (psf)		SPACING	2-0-0	CSI		DEFL	in	(loc)	l/defl	L/d	PLATES	GRIP
TCLL	16.0	Plates Increase	1.25	TC	0.10	Vert(LL)	-0.00	2	>999	240	MT20	244/190
TCDL	7.0	Lumber Increase	1.25	BC	0.01	Vert(TL)	-0.00	2	>999	180		
BCLL	10.0	Rep Stress Incr	YES	WB	0.00	Horz(TL)	-0.00	3	n/a	n/a		
BCDL	10.0	Code FBC2004/TPI2002		(Matrix)							Weight: 5 lb	

LUMBER
TOP CHORD 2 X 4 SYP No.2
BOT CHORD 2 X 4 SYP No.2

BRACING
TOP CHORD Structural wood sheathing directly applied or 1-0-0 oc purlins.
BOT CHORD Rigid ceiling directly applied or 10-0-0 oc bracing.

REACTIONS (lb/size) 2=119/0-1-8, 4=20/Mechanical, 3=-5/Mechanical
Max Horz 2=54(LC 6)
Max Uplift2=-123(LC 6), 4=-10(LC 4), 3=-5(LC 1)
Max Grav2=119(LC 1), 4=20(LC 1), 3=20(LC 6)

FORCES (lb) - Maximum Compression/Maximum Tension
TOP CHORD 1-2=0/21, 2-3=-24/9
BOT CHORD 2-4=0/0

NOTES (6)
1) Wind: ASCE 7-02; 125mph (3-second gust); h=25ft; TCDL=4.2psf; BCDL=6.0psf; Category II; Exp B; enclosed; MWFRS (low-rise) and C-C Exterior(2) zone; porch left and right exposed; Lumber DOL=1.60 plate grip DOL=1.60. This truss is designed for C-C for members and forces, and for MWFRS for reactions specified.
2) This truss has been designed for a 10.0 psf bottom chord live load nonconcurrent with any other live loads.
3) Refer to girder(s) for truss to truss connections.
4) Provide mechanical connection (by others) of truss to bearing plate at joint(s) 2.
5) Provide mechanical connection (by others) of truss to bearing plate capable of withstanding 123 lb uplift at joint 2, 10 lb uplift at joint 4 and 5 lb uplift at joint 3.
6) Attach with (2) 16d Common Toe-Nails (0.162"x3.5") at joints 3 and 4.

LOAD CASE(S) Standard

MARVIN A. STRZYZEWSKI LICENSE No 43144 STATE OF FLORIDA PROFESSIONAL ENGINEER

Marvin A. Strzyzewski, FL Lic. #43144
Truss Engineering Co.
818 Soundside Road
Edenton, NC 27932
FL COA #7239

January 4,2008

ENGINEERING BY TRENCO A MiTek Affiliate
818 Soundside Road
Edenton, NC 27932

Job	Truss	Truss Type	Qty	Ply	AUSTIN_FL_125
AUSTIN	J4	MONO TRUSS	3	1	Job Reference (optional)

E4595118

Maronda Homes Inc., Sanford, Florida

7.020 s Nov 9 2007 MiTek Industries, Inc. Thu Jan 03 16:55:15 2008 Page 1

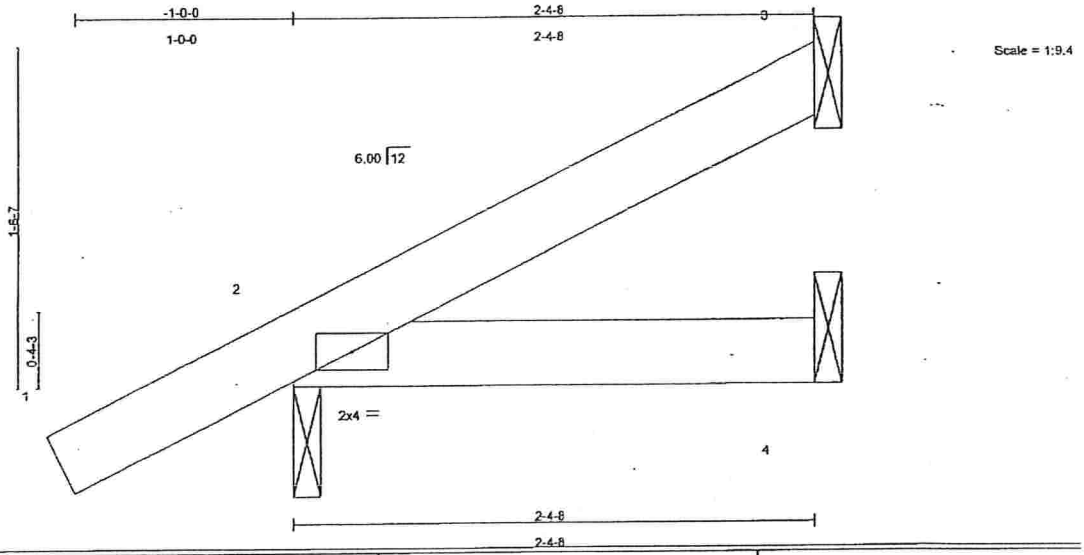

LOADING (psf)		SPACING	2-0-0	CSI		DEFL	in	(loc)	l/defl	L/d	PLATES	GRIP
TCLL	16.0	Plates Increase	1.25	TC	0.11	Vert(LL)	0.01	2-4	>999	240	MT20	244/190
TCDL	7.0	Lumber Increase	1.25	BC	0.06	Vert(TL)	-0.00	2-4	>999	180		
BCLL	10.0	Rep Stress Incr	YES	WB	0.00	Horz(TL)	-0.00	3	n/a	n/a		
BCDL	10.0	Code FBC2004/TPI2002		(Matrix)							Weight: 9 lb	

LUMBER
TOP CHORD 2 X 4 SYP No.2
BOT CHORD 2 X 4 SYP No.2

BRACING
TOP CHORD Structural wood sheathing directly applied or 2-4-8 oc purlins.
BOT CHORD Rigid ceiling directly applied or 10-0-0 oc bracing.

REACTIONS (lb/size) 3=39/Mechanical, 2=162/0-1-8, 4=45/Mechanical
Max Horz 2=82(LC 6)
Max Uplift3=-31(LC 6), 2=-131(LC 6), 4=-23(LC 4)

FORCES (lb) - Maximum Compression/Maximum Tension
TOP CHORD 1-2=0/21, 2-3=-50/13
BOT CHORD 2-4=0/0

NOTES (6)
1) Wind: ASCE 7-02; 125mph (3-second gust); h=25ft; TCDL=4.2psf; BCDL=6.0psf; Category II; Exp B; enclosed; MWFRS (low-rise) and C-C Exterior(2) zone; porch left and right exposed; Lumber DOL=1.60 plate grip DOL=1.60. This truss is designed for C-C for members and forces, and for MWFRS for reactions specified.
2) This truss has been designed for a 10.0 psf bottom chord live load nonconcurrent with any other live loads.
3) Refer to girder(s) for truss to truss connections.
4) Provide mechanical connection (by others) of truss to bearing plate at joint(s) 2.
5) Provide mechanical connection (by others) of truss to bearing plate capable of withstanding 31 lb uplift at joint 3, 131 lb uplift at joint 2 and 23 lb uplift at joint 4.
6) Attach with (2) 16d Common Toe-Nails (0.162"x3.5") at joints 3 and 4.

LOAD CASE(S) Standard

MARVIN A. STRZYZEWSKI
LICENSE
No 43144
STATE OF
FLORIDA
PROFESSIONAL ENGINEER

Marvin A. Strzyzewski, FL Lic. #43144
Truss Engineering Co.
818 Soundside Road
Edenton, NC 27932
FL COA #7239

January 4,2008

ENGINEERING BY TRENCO
A MiTek Affiliate
818 Soundside Road
Edenton, NC 27932

Job	Truss	Truss Type	Qty	Ply	AUSTIN_FL_125	
AUSTIN	C1	SPECIAL	1	1	Job Reference (optional)	E4595116

Maronda Homes Inc., Sanford, Florida

7.020 s Nov 9 2007 MiTek Industries, Inc. Thu Jan 03 16:55:13 2008 Page 1

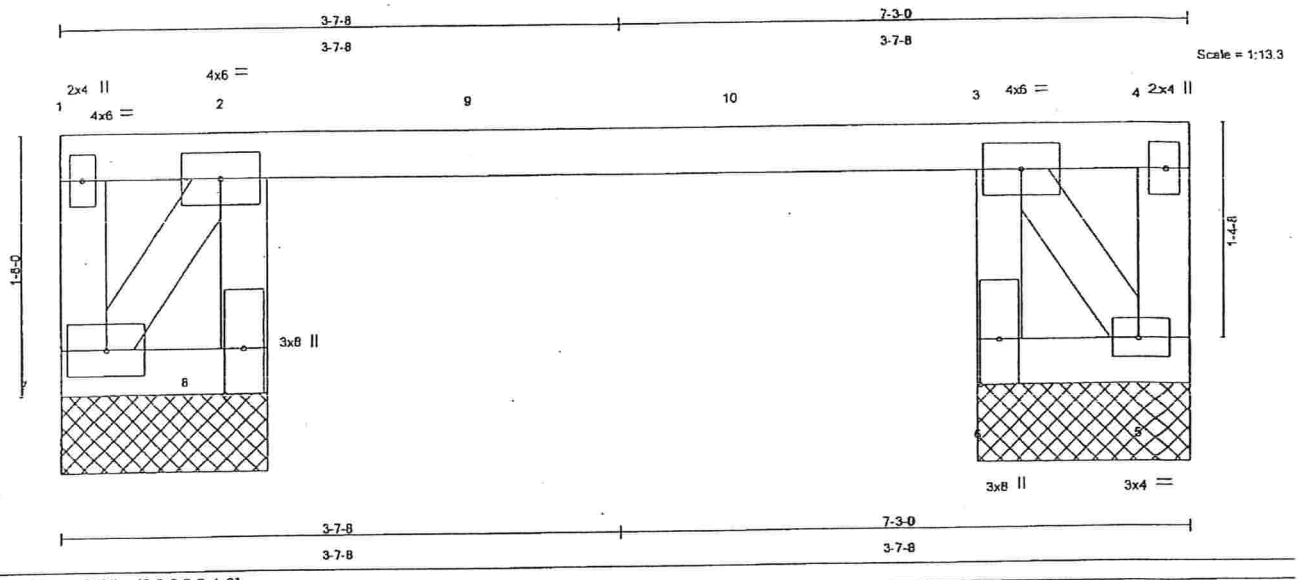

Plate Offsets (X,Y): [8:0-3-8,0-1-8]

LOADING (psf)		SPACING	2-0-0	CSI		DEFL	in	(loc)	l/defl	L/d	PLATES	GRIP
TCLL	16.0	Plates Increase	1.25	TC	0.84	Vert(LL)	-0.00	6	>999	240	MT20	244/190
TCDL	7.0	Lumber Increase	1.25	BC	0.01	Vert(TL)	-0.00	6	>999	180		
BCLL	10.0	Rep Stress Incr	NO	WB	0.11	Horz(TL)	0.01	5	n/a	n/a		
BCDL	10.0	Code FBC2004/TPI2002		(Matrix)							Weight: 25 lb	

LUMBER
TOP CHORD 2 X 4 SYP No.2
BOT CHORD 2 X 4 SYP No.2
WEBS 2 X 4 SYP No.2

BRACING
TOP CHORD Structural wood sheathing directly applied or 7-3-0 oc purlins, except end verticals.
BOT CHORD Rigid ceiling directly applied or 10-0-0 oc bracing.

REACTIONS (lb/size) 7=-157/1-4-0, 5=-136/1-4-0, 8=1102/1-4-0, 6=1295/1-4-0
Max Uplift7=-157(LC 1), 5=-136(LC 1), 8=-641(LC 3), 6=-713(LC 3)
Max Grav7=106(LC 3), 5=112(LC 3), 8=1102(LC 1), 6=1295(LC 1)

FORCES (lb) - Maximum Compression/Maximum Tension
TOP CHORD 1-7=-106/157, 1-2=0/0, 2-9=0/0, 9-10=0/0, 3-10=0/0, 3-4=0/0, 4-5=-106/157
BOT CHORD 5-6=0/0
WEBS 2-8=-1102/641, 3-6=-1102/641, 7-8=0/0, 2-7=-0/0, 3-5=0/0

NOTES
1) Wind: ASCE 7-02; 125mph (3-second gust); h=25ft; TCDL=4.2psf; BCDL=6.0psf; Category II; Exp B; enclosed; MWFRS (low-rise) gable end zone; porch left and right exposed; Lumber DOL=1.60 plate grip DOL=1.60.
2) Provide adequate drainage to prevent water ponding.
3) This truss has been designed for a 10.0 psf bottom chord live load nonconcurrent with any other live loads.
4) Provide mechanical connection (by others) of truss to bearing plate capable of withstanding 157 lb uplift at joint 7, 136 lb uplift at joint 5, 641 lb uplift at joint 8 and 713 lb uplift at joint 6.
5) Hanger(s) or other connection device(s) shall be provided sufficient to support concentrated load(s) 119 lb down and 54 lb up at 1-1-5, 119 lb down and 54 lb up at 6-1-11, 172 lb down and 78 lb up at 2-9-7, 172 lb down and 78 lb up at 4-5-9, 119 lb down and 54 lb up at 1-1-5, 119 lb down and 54 lb up at 6-1-11, 172 lb down and 78 lb up at 4-5-9, 172 lb down and 78 lb up at 2-9-7, and 203 lb down and 92 lb up at 0-1-12, and 203 lb down and 92 lb up at 7-1-4 on top chord, and 172 lb down and 78 lb up at 2-9-7, and 172 lb down and 78 lb up at 4-5-9 on bottom chord. The design/selection of such connection device(s) is the responsibility of others.
6) In the LOAD CASE(S) section, loads applied to the face of the truss are noted as front (F) or back (B).

LOAD CASE(S) Standard
1) Regular: Lumber Increase=1.25, Plate Increase=1.25
Uniform Loads (plf)
Vert: 1-4=-46, 5-6=-40
Concentrated Loads (lb)
Vert: 1=-203 4=-203 2=-238(F=-119) 6=-172 3=-238(F=-119) 9=-344(F=-172) 10=-344(F=-172)

MARVIN A. STRZYZEWSKI LICENSE No 43144 STATE OF FLORIDA PROFESSIONAL ENGINEER

Marvin A. Strzyzewski, FL Lic. #43144
Truss Engineering Co.
818 Soundside Road
Edenton, NC 27932
FL COA #7239

January 4,2008

ENGINEERING BY TRENCO A MiTek Affiliate
818 Soundside Road
Edenton, NC 27932

Job	Truss	Truss Type	Qty	Ply	AUSTIN_FL_125	
AUSTIN	V1	VALLEY	2	1	Job Reference (optional)	E4530701

Maronda Homes Inc., Sanford, FL

7.010 s Oct 18 2007 MiTek Industries, Inc. Wed Nov 21 10:00:13 2007 Page 1

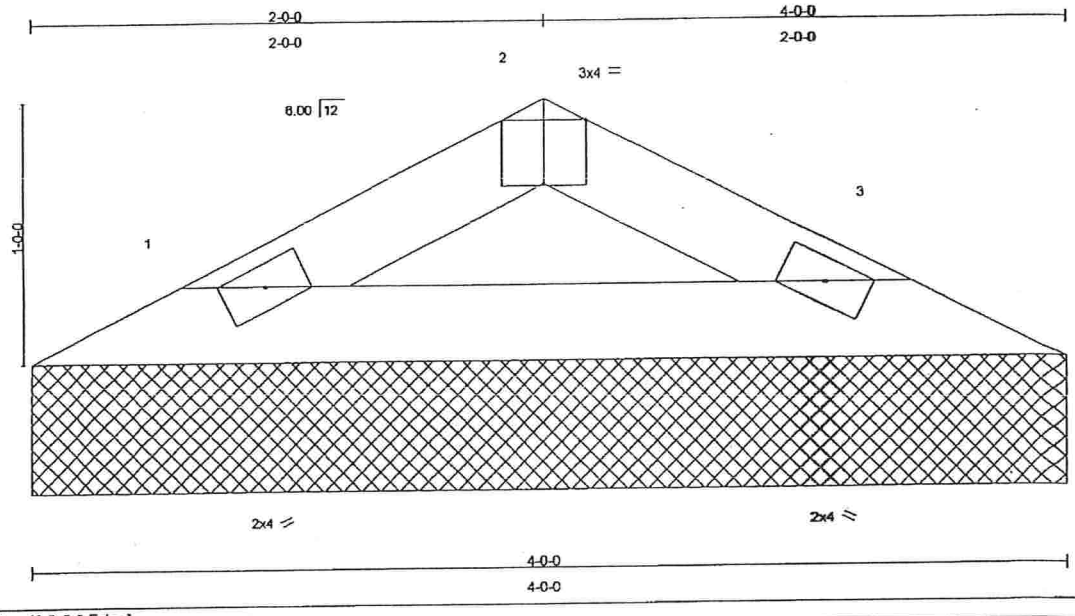

Plate Offsets (X,Y): [2:0-2-0,Edge]

LOADING (psf)		SPACING	2-0-0	CSI		DEFL	in	(loc)	l/defl	L/d	PLATES	GRIP
TCLL	16.0	Plates Increase	1.25	TC	0.03	Vert(LL)	n/a	-	n/a	999	MT20	244/190
TCDL	7.0	Lumber Increase	1.25	BC	0.08	Vert(TL)	n/a	-	n/a	999		
BCLL	10.0	Rep Stress Incr	YES	WB	0.00	Horz(TL)	0.00	3	n/a	n/a		
BCDL	10.0	Code FBC2004/TPI2002		(Matrix)							Weight: 11 lb	

LUMBER
TOP CHORD 2 X 4 SYP No.2
BOT CHORD 2 X 4 SYP No.2

BRACING
TOP CHORD Structural wood sheathing directly applied or 4-0-0 oc purlins.
BOT CHORD Rigid ceiling directly applied or 10-0-0 oc bracing.

REACTIONS (lb/size) 1=119/4-0-0, 3=119/4-0-0
Max Horz 1=-11(LC 4)
Max Uplift 1=-22(LC 6), 3=-22(LC 7)

FORCES (lb) - Maximum Compression/Maximum Tension
TOP CHORD 1-2=-82/69, 2-3=-82/69
BOT CHORD 1-3=-42/64

NOTES
1) Unbalanced roof live loads have been considered for this design.
2) Wind: ASCE 7-02; 125mph (3-second gust); h=25ft; TCDL=4.2psf; BCDL=6.0psf; Category II; Exp B; enclosed; MWFRS (low-rise) and C-C Interior(1) zone; Lumber DOL=1.60 plate grip DOL=1.60. This truss is designed for C-C for members and forces, and for MWFRS for reactions specified.
3) This truss has been designed for a 10.0 psf bottom chord live load nonconcurrent with any other live loads.
4) Gable requires continuous bottom chord bearing.
5) WARNING: Top chord roof live load is below minimum required by ASCE 7. The building design professional for the overall structure to verify adequacy of top chord live load.
6) Provide mechanical connection (by others) of truss to bearing plate capable of withstanding 22 lb uplift at joint 1 and 22 lb uplift at joint 3.

LOAD CASE(S) Standard

This document was originally issued by Lassiter, Frank on November 21,2007. This is not considered a sealed document. Official sealed drawings are available upon request from the manufacturer indicated above.

November 21,2007

ENGINEERING BY TRENCO
A MiTek Affiliate
818 Soundside Road
Edenton, NC 27932

Job	Truss	Truss Type	Qty	Ply	AUSTIN_FL_125
AUSTIN	V2	VALLEY	1	1	Job Reference (optional)

E4530712

Meronde Homes Inc., Sanford, FL

7.020 s Nov 9 2007 MiTek Industries, Inc. Wed Nov 21 08:44:23 2007 Page 1

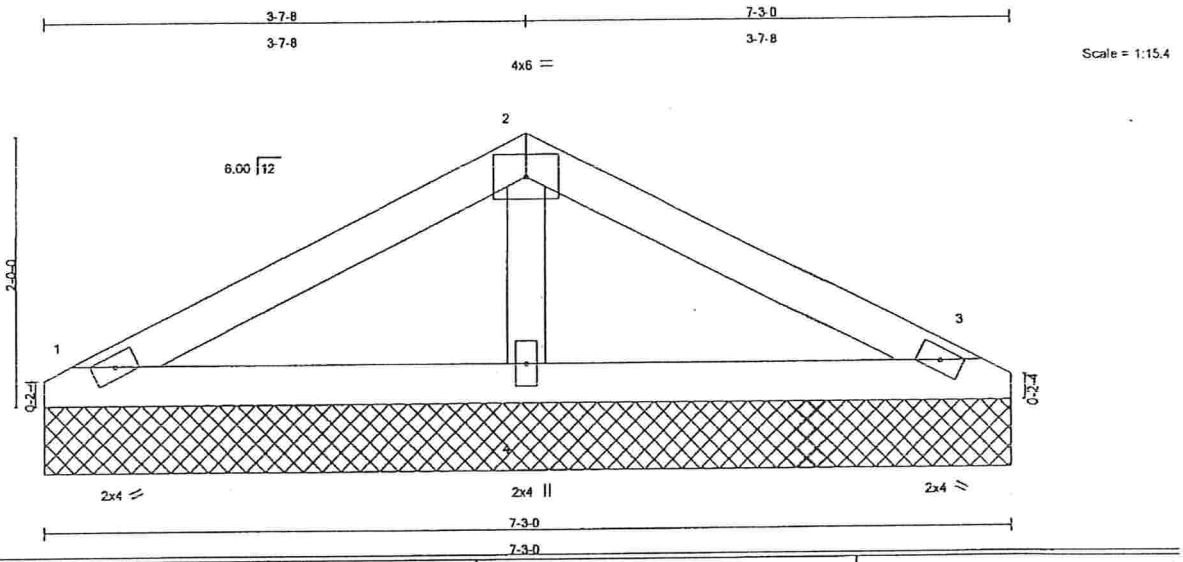

LOADING (psf)		SPACING	2-0-0	CSI		DEFL	in	(loc)	l/defl	L/d	PLATES	GRIP
TCLL	16.0	Plates Increase	1.25	TC	0.12	Vert(LL)	n/a	-	n/a	999	MT20	244/190
TCDL	7.0	Lumber Increase	1.25	BC	0.11	Vert(TL)	n/a	-	n/a	999		
BCLL	10.0	Rep Stress Incr	YES	WB	0.02	Horz(TL)	0.00	3	n/a	n/a		
BCDL	10.0	Code FBC2004/TPI2002		(Matrix)							Weight: 24 lb	

LUMBER
TOP CHORD 2 X 4 SYP No.2
BOT CHORD 2 X 4 SYP No.2
OTHERS 2 X 4 SYP No.2

BRACING
TOP CHORD Structural wood sheathing directly applied or 6-0-0 oc purlins.
BOT CHORD Rigid ceiling directly applied or 10-0-0 oc bracing.

REACTIONS (lb/size) 1=136/7-3-0, 3=136/7-3-0, 4=310/7-3-0
Max Horz 1=-28(LC 4)
Max Uplift1=-44(LC 6), 3=-49(LC 7), 4=-21(LC 6)

FORCES (lb) - Maximum Compression/Maximum Tension
TOP CHORD 1-2=-44/39, 2-3=-44/38
BOT CHORD 1-4=-2/18, 3-4=-2/18
WEBS 2-4=-141/112

NOTES
1) Unbalanced roof live loads have been considered for this design.
2) Wind: ASCE 7-02; 125mph (3-second gust); h=25ft; TCDL=4.2psf; BCDL=6.0psf; Category II; Exp B; enclosed; MWFRS (low-rise) and C-C Interior(1) zone; Lumber DOL=1.60 plate grip DOL=1.60. This truss is designed for C-C for members and forces, and for MWFRS for reactions specified.
3) This truss has been designed for a 10.0 psf bottom chord live load nonconcurrent with any other live loads.
4) Gable requires continuous bottom chord bearing.
5) Provide mechanical connection (by others) of truss to bearing plate capable of withstanding 44 lb uplift at joint 1, 49 lb uplift at joint 3 and 21 lb uplift at joint 4.

LOAD CASE(S) Standard

This document was originally issued by Lassiter, Frank on November 21,2007. This is not considered a sealed document. Official sealed drawings are available upon request from the manufacturer indicated above.

November 21,2007

ENGINEERING BY TRENCO A MiTek Affiliate
818 Soundside Road
Edenton, NC 27932

Job	Truss	Truss Type	Qty	Ply	AUSTIN_FL_125	
AUSTIN	V3	VALLEY	1	1	Job Reference (optional)	E4530714

Maronda Homes Inc., Sanford, FL

7.010 s Oct 16 2007 MiTek Industries, Inc. Wed Nov 21 10:01:28 2007 Page 1

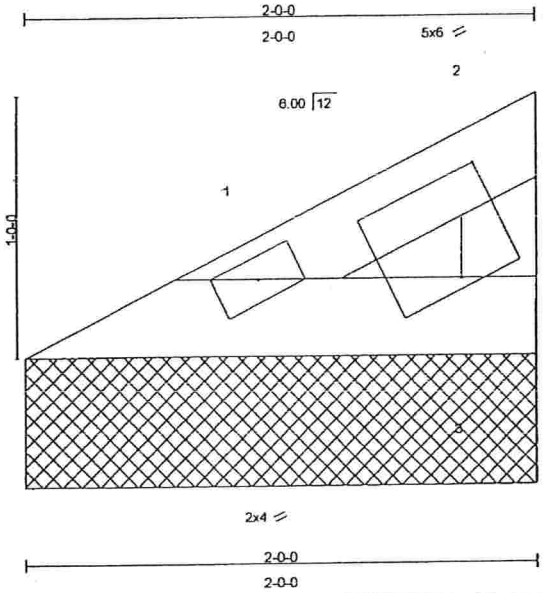

Scale: 1.5"=1'

Plate Offsets (X,Y): [2:0-2-13,0-4-8]

LOADING (psf)		SPACING	2-0-0	CSI		DEFL	in	(loc)	l/defl	L/d	PLATES	GRIP
TCLL	16.0	Plates Increase	1.25	TC	0.01	Vert(LL)	n/a	-	n/a	999	MT20	244/190
TCDL	7.0	Lumber Increase	1.25	BC	0.01	Vert(TL)	n/a	-	n/a	999		
BCLL	10.0	Rep Stress Incr	YES	WB	0.00	Horz(TL)	0.00		n/a	n/a		
BCDL	10.0	Code FBC2004/TPI2002		(Matrix)							Weight: 6 lb	

LUMBER
TOP CHORD 2 X 4 SYP No.2
BOT CHORD 2 X 4 SYP No.2
WEBS 2 X 4 SYP No.2

BRACING
TOP CHORD Structural wood sheathing directly applied or 2-0-0 oc purlins, except end verticals.
BOT CHORD Rigid ceiling directly applied or 10-0-0 oc bracing.

REACTIONS (lb/size) 1=39/2-0-0, 3=39/2-0-0
Max Horz 1=26(LC 6)
Max Uplift 1=-1(LC 6), 3=-18(LC 6)

FORCES (lb) - Maximum Compression/Maximum Tension
TOP CHORD 1-2=-21/9, 2-3=-21/30
BOT CHORD 1-3=0/0

NOTES
1) Wind: ASCE 7-02; 125mph (3-second gust); h=25ft; TCDL=4.2psf; BCDL=6.0psf; Category II; Exp B; enclosed; MWFRS (low-rise) and C-C Interior(1) zone; Lumber DOL=1.60 plate grip DOL=1.60. This truss is designed for C-C for members and forces, and for MWFRS for reactions specified.
2) This truss has been designed for a 10.0 psf bottom chord live load nonconcurrent with any other live loads.
3) Gable requires continuous bottom chord bearing.
4) WARNING: Top chord roof live load is below minimum required by ASCE 7. The building design professional for the overall structure to verify adequacy of top chord live load.
5) Provide mechanical connection (by others) of truss to bearing plate capable of withstanding 1 lb uplift at joint 1 and 18 lb uplift at joint 3.

LOAD CASE(S) Standard

This document was originally issued by Lassiter, Frank on November 21,2007. This is not considered a sealed document. Official sealed drawings are available upon request from the manufacturer indicated above.

November 21,2007

ENGINEERING BY TRENCO A MiTek Affiliate
818 Soundside Road
Edenton, NC 27932

Job	Truss	Truss Type	Qty	Ply	AUSTIN_FL_125	E4530715
AUSTIN	V4	VALLEY	1	1	Job Reference (optional)	

Maronda Homes Inc., Sanford, FL

7.020 s Nov 9 2007 MiTek Industries, Inc. Wed Nov 21 08:44:24 2007 Page 1

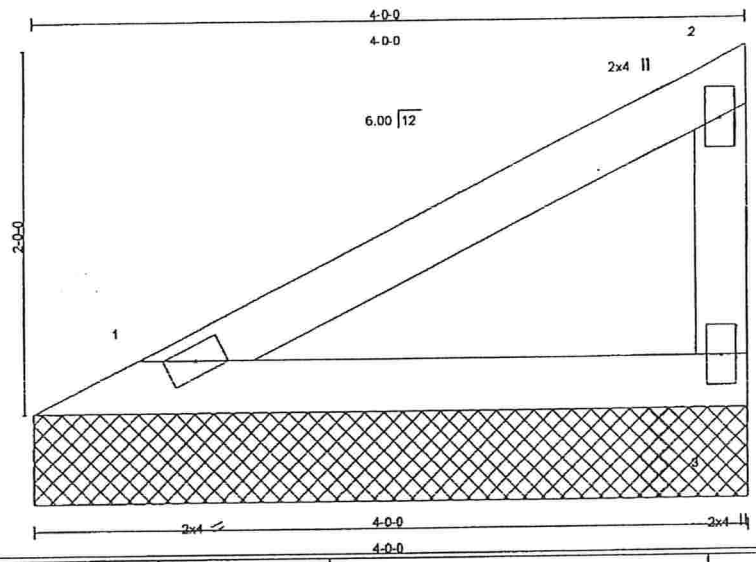

Scale = 1:11.5

LOADING (psf)		SPACING	2-0-0	CSI		DEFL	in	(loc)	l/defl	L/d	PLATES	GRIP
TCLL	16.0	Plates Increase	1.25	TC	0.11	Vert(LL)	n/a	-	n/a	999	MT20	244/190
TCDL	7.0	Lumber Increase	1.25	BC	0.10	Vert(TL)	n/a	-	n/a	999		
BCLL	10.0	Rep Stress Incr	YES	WB	0.00	Horz(TL)	0.00		n/a	n/a		
BCDL	10.0	Code FBC2004/TPI2002		(Matrix)							Weight: 14 lb	

LUMBER
TOP CHORD 2 X 4 SYP No.2
BOT CHORD 2 X 4 SYP No.2
WEBS 2 X 4 SYP No.2

BRACING
TOP CHORD Structural wood sheathing directly applied or 4-0-0 oc purlins, except end verticals.
BOT CHORD Rigid ceiling directly applied or 10-0-0 oc bracing.

REACTIONS (lb/size) 1=139/4-0-0, 3=139/4-0-0
Max Horz 1=67(LC 6)
Max Uplift1=-17(LC 6), 3=-51(LC 6)

FORCES (lb) - Maximum Compression/Maximum Tension
TOP CHORD 1-2=-51/27, 2-3=-74/90
BOT CHORD 1-3=0/0

NOTES
1) Wind: ASCE 7-02; 125mph (3-second gust); h=25ft; TCDL=4.2psf; BCDL=6.0psf; Category II; Exp B; enclosed; MWFRS (low-rise) and C-C Interior(1) zone; Lumber DOL=1.60 plate grip DOL=1.60. This truss is designed for C-C for members and forces, and for MWFRS for reactions specified.
2) This truss has been designed for a 10.0 psf bottom chord live load nonconcurrent with any other live loads.
3) Gable requires continuous bottom chord bearing.
4) Provide mechanical connection (by others) of truss to bearing plate capable of withstanding 17 lb uplift at joint 1 and 51 lb uplift at joint 3.

LOAD CASE(S) Standard

This document was originally issued by Lassiter, Frank on November 21,2007. This is not considered a sealed document. Official sealed drawings are available upon request from the manufacturer indicated above.

November 21,2007

ENGINEERING BY TRENCO A MiTek Affiliate
818 Soundside Road
Edenton, NC 27932

Job	Truss	Truss Type	Qty	Ply	AUSTIN_FL_125	
AUSTIN	V5	VALLEY	1	1	Job Reference (optional)	E4530718

Maronda Homes Inc., Sanford, FL

7.020 s Nov 9 2007 MiTek Industries, Inc. Wed Nov 21 08:44:25 2007 Page 1

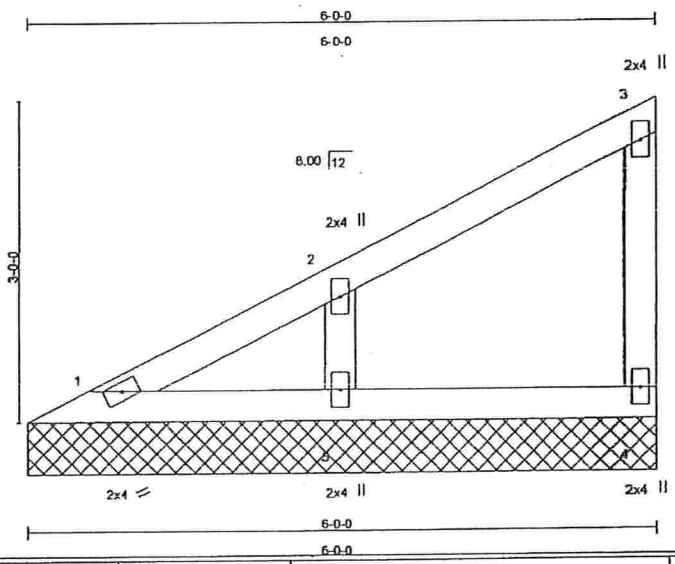

LOADING (psf)		SPACING	2-0-0	CSI		DEFL	in	(loc)	l/defl	L/d	PLATES	GRIP
TCLL	16.0	Plates Increase	1.25	TC	0.08	Vert(LL)	n/a	-	n/a	999	MT20	244/190
TCDL	7.0	Lumber Increase	1.25	BC	0.07	Vert(TL)	n/a	-	n/a	999		
BCLL	10.0	Rep Stress Incr	YES	WB	0.03	Horz(TL)	0.00		n/a	n/a		
BCDL	10.0	Code FBC2004/TPI2002		(Matrix)							Weight: 23 lb	

LUMBER
TOP CHORD 2 X 4 SYP No.2
BOT CHORD 2 X 4 SYP No.2
WEBS 2 X 4 SYP No.2
OTHERS 2 X 4 SYP No.2

BRACING
TOP CHORD Structural wood sheathing directly applied or 6-0-0 oc purlins, except end verticals.
BOT CHORD Rigid ceiling directly applied or 10-0-0 oc bracing.

REACTIONS (lb/size) 1=71/6-0-0, 4=98/6-0-0, 5=283/6-0-0
Max Horz 1=109(LC 6)
Max Uplift4=-35(LC 6), 5=-103(LC 6)

FORCES (lb) - Maximum Compression/Maximum Tension
TOP CHORD 1-2=-128/32, 2-3=-39/17, 3-4=-52/62
BOT CHORD 1-5=0/0, 4-5=0/0
WEBS 2-5=-151/182

NOTES
1) Wind: ASCE 7-02; 125mph (3-second gust); h=25ft; TCDL=4.2psf; BCDL=6.0psf; Category II; Exp B; enclosed; MWFRS (low-rise) and C-C Interior(1) zone; Lumber DOL=1.60 plate grip DOL=1.60. This truss is designed for C-C for members and forces, and for MWFRS for reactions specified.
2) This truss has been designed for a 10.0 psf bottom chord live load nonconcurrent with any other live loads.
3) Gable requires continuous bottom chord bearing.
4) Provide mechanical connection (by others) of truss to bearing plate capable of withstanding 35 lb uplift at joint 4 and 103 lb uplift at joint 5.

LOAD CASE(S) Standard

This document was originally issued by Lassiter, Frank on November 21,2007. This is not considered a sealed document. Official sealed drawings are available upon request from the manufacturer indicated above.

November 21,2007

ENGINEERING BY TRENCO
A MiTek Affiliate
818 Soundside Road
Edenton, NC 27932

Job	Truss	Truss Type	Qty	Ply	AUSTIN_FL_125	
AUSTIN	V6	VALLEY	1	1	Job Reference (optional)	E4530717

Maronda Homes Inc., Sanford, FL

7.020 s Nov 9 2007 MiTek Industries, Inc. Wed Nov 21 08:44:25 2007 Page 1

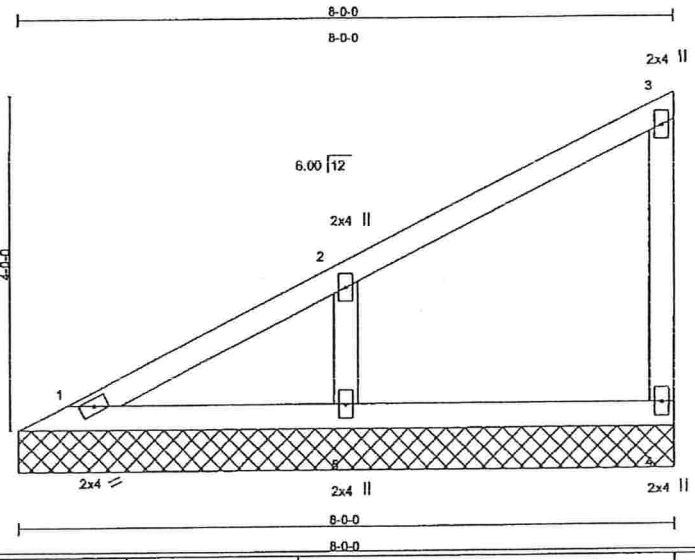

LOADING (psf)		SPACING	2-0-0	CSI		DEFL	in	(loc)	l/defl	L/d	PLATES	GRIP
TCLL	16.0	Plates Increase	1.25	TC	0.15	Vert(LL)	n/a	-	n/a	999	MT20	244/190
TCDL	7.0	Lumber Increase	1.25	BC	0.13	Vert(TL)	n/a	-	n/a	999		
BCLL	10.0	Rep Stress Incr	YES	WB	0.04	Horz(TL)	0.00		n/a	n/a		
BCDL	10.0	Code FBC2004/TPI2002		(Matrix)							Weight: 31 lb	

LUMBER

TOP CHORD 2 X 4 SYP No.2
BOT CHORD 2 X 4 SYP No.2
WEBS 2 X 4 SYP No.2
OTHERS 2 X 4 SYP No.2

BRACING

TOP CHORD Structural wood sheathing directly applied or 6-0-0 oc purlins, except end verticals.
BOT CHORD Rigid ceiling directly applied or 10-0-0 oc bracing.

REACTIONS (lb/size) 1=103/8-0-0, 4=129/8-0-0, 5=390/8-0-0
Max Horz 1=150(LC 6)
Max Uplift4=-47(LC 6), 5=-142(LC 6)

FORCES (lb) - Maximum Compression/Maximum Tension
TOP CHORD 1-2=-171/45, 2-3=-51/23, 3-4=-69/81
BOT CHORD 1-5=0/0, 4-5=0/0
WEBS 2-5=-209/245

NOTES

1) Wind: ASCE 7-02; 125mph (3-second gust); h=25ft; TCDL=4.2psf; BCDL=6.0psf; Category II; Exp B; enclosed; MWFRS (low-rise) and C-C Interior(1) zone; Lumber DOL=1.60 plate grip DOL=1.60. This truss is designed for C-C for members and forces, and for MWFRS for reactions specified.
2) This truss has been designed for a 10.0 psf bottom chord live load nonconcurrent with any other live loads.
3) Gable requires continuous bottom chord bearing.
4) Provide mechanical connection (by others) of truss to bearing plate capable of withstanding 47 lb uplift at joint 4 and 142 lb uplift at joint 5.

LOAD CASE(S) Standard

This document was originally issued by Lassiter, Frank on November 21,2007. This is not considered a sealed document. Official sealed drawings are available upon request from the manufacturer indicated above. November 21,2007

ENGINEERING BY TRENCO A MiTek Affiliate
818 Soundside Road
Edenton, NC 27932

Job	Truss	Truss Type	Qty	Ply	AUSTIN_FL_125	
AUSTIN	V14	GABLE	1	1	Job Reference (optional)	E4530706

Maronda Homes Inc., Sanford, FL

7.020 s Nov 9 2007 MiTek Industries, Inc. Wed Nov 21 08:44:19 2007 Page 1

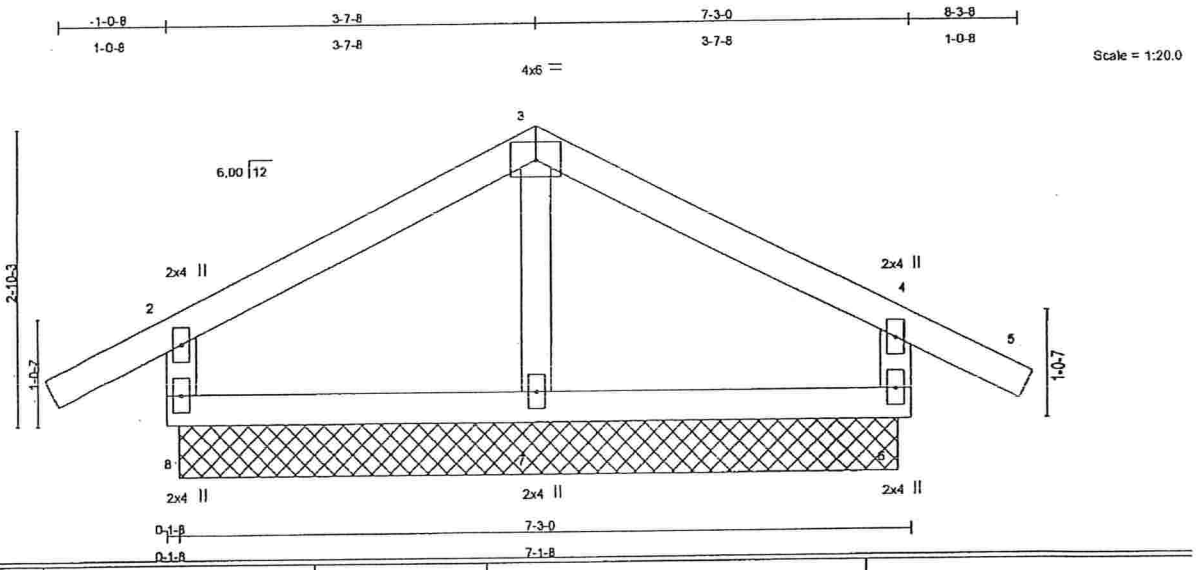

LOADING (psf)		SPACING	2-0-0	CSI		DEFL	in	(loc)	l/defl	L/d	PLATES	GRIP
TCLL	16.0	Plates Increase	1.25	TC	0.14	Vert(LL)	0.00	4	n/r	120	MT20	244/190
TCDL	7.0	Lumber Increase	1.25	BC	0.07	Vert(TL)	-0.00	4	n/r	120		
BCLL	10.0	Rep Stress Incr	YES	WB	0.01	Horz(TL)	0.00	6	n/a	n/a		
BCDL	10.0	Code FBC2004/TPI2002		(Matrix)							Weight: 32 lb	

LUMBER

TOP CHORD 2 X 4 SYP No.2
BOT CHORD 2 X 4 SYP No.2
WEBS 2 X 4 SYP No.2
OTHERS 2 X 4 SYP No.2

BRACING

TOP CHORD Structural wood sheathing directly applied or 6-0-0 oc purlins, except end verticals.
BOT CHORD Rigid ceiling directly applied or 10-0-0 oc bracing.

REACTIONS (lb/size) 8=226/7-0-0, 6=226/7-0-0, 7=261/7-0-0
Max Horz 8=56(LC 6)
Max Uplift8=-123(LC 6), 6=-126(LC 7), 7=-10(LC 6)
Max Grav 8=228(LC 10), 6=228(LC 11), 7=261(LC 1)

FORCES (lb) - Maximum Compression/Maximum Tension
TOP CHORD 1-2=0/26, 2-3=-90/64, 3-4=-90/64, 4-5=0/26, 2-8=-164/222, 4-6=-164/222
BOT CHORD 7-8=-11/59, 6-7=-11/59
WEBS 3-7=-113/90

NOTES

1) Unbalanced roof live loads have been considered for this design.
2) Wind: ASCE 7-02; 125mph (3-second gust); h=25ft; TCDL=4.2psf; BCDL=6.0psf; Category II; Exp B; enclosed; MWFRS (low-rise) and C-C Interior(1) zone; Lumber DOL=1.60 plate grip DOL=1.60. This truss is designed for C-C for members and forces, and for MWFRS for reactions specified.
3) Truss designed for wind loads in the plane of the truss only. For studs exposed to wind (normal to the face), see Standard Industry Gable End Details as applicable, or consult qualified building designer as per ANSI/TPI 1-2002.
4) This truss has been designed for a 10.0 psf bottom chord live load nonconcurrent with any other live loads.
5) Truss to be fully sheathed from one face or securely braced against lateral movement (i.e. diagonal web).
6) Gable studs spaced at 4-0-0 oc.
7) Provide mechanical connection (by others) of truss to bearing plate capable of withstanding 123 lb uplift at joint 8, 126 lb uplift at joint 6 and 10 lb uplift at joint 7.
8) Non Standard bearing condition. Review required.

LOAD CASE(S) Standard

This document was originally issued by Lassiter, Frank on November 21,2007. This is not considered a sealed document. Official sealed drawings are available upon request from the manufacturer indicated above.

November 21,2007

ENGINEERING BY TRENCO
A MiTek Affiliate
818 Soundside Road
Edenton, NC 27932

Symbols

PLATE LOCATION AND ORIENTATION

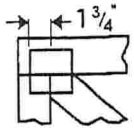

Center plate on joint unless x, y offsets are indicated. Dimensions are in ft-in-sixteenths. Apply plates to both sides of truss and fully embed teeth.

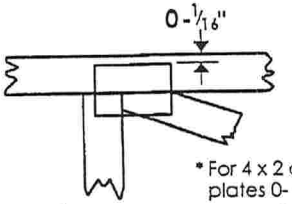

* For 4 x 2 orientation, locate plates 0-1/16" from outside edge of truss.

* This symbol indicates the required direction of slots in connector plates.

*** Plate location details available in MiTek 20/20 software or upon request.**

PLATE SIZE

4 X 4

The first dimension is the plate width measured perpendicular to slots. Second dimension is the length parallel to slots.

LATERAL BRACING LOCATION

Indicated by symbol shown and/or by text in the bracing section of the output. Use T, I or Eliminator bracing if indicated.

BEARING

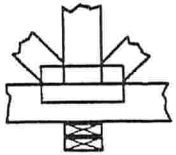

Indicates location where bearings (supports) occur. Icons vary but reaction section indicates joint number where bearings occur.

Industry Standards:

ANSI/TPI1: National Design Specification for Metal Plate Connected Wood Truss Construction.
DSB-89: Design Standard for Bracing.
BCSI1: Building Component Safety Information, Guide to Good Practice for Handling, Installing & Bracing of Metal Plate Connected Wood Trusses.

Numbering System

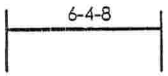

dimensions shown in ft-in-sixteenths (Drawings not to scale)

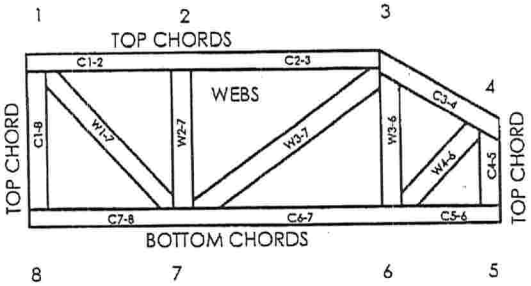

JOINTS ARE GENERALLY NUMBERED/LETTERED CLOCKWISE AROUND THE TRUSS STARTING AT THE JOINT FARTHEST TO THE LEFT.

CHORDS AND WEBS ARE IDENTIFIED BY END JOINT NUMBERS/LETTERS.

PRODUCT CODE APPROVALS

ICC-ES Reports:

ESR-1311, ESR-1352, ER-5243, 9604B
9730, 95-43, 96-31, 9667A
NER-487, NER-561
95110, 84-32, 96-67, ER-3907, 9432A

MiTek®
POWER TO PERFORM.™
ENGINEERING BY TRENCO
A MiTek Affiliate

MiTek Engineering Reference Sheet: MII-7473

General Safety Notes

Failure to Follow Could Cause Property Damage or Personal Injury

1. Additional stability bracing for truss system, e.g. diagonal or X-bracing, is always required. See BCSI1.
2. Truss bracing must be designed by an engineer. For wide truss spacing, individual lateral braces themselves may require bracing, or alternative T, I, or Eliminator bracing should be considered.
3. Never exceed the design loading shown and never stack materials on inadequately braced trusses.
4. Provide copies of this truss design to the building designer, erection supervisor, property owner and all other interested parties.
5. Cut members to bear tightly against each other.
6. Place plates on each face of truss at each joint and embed fully. Knots and wane at joint locations are regulated by ANSI/TPI 1.
7. Design assumes trusses will be suitably protected from the environment in accord with ANSI/TPI 1.
8. Unless otherwise noted, moisture content of lumber shall not exceed 19% at time of fabrication.
9. Unless expressly noted, this design is not applicable for use with fire retardant, preservative treated, or green lumber.
10. Camber is a non-structural consideration and is the responsibility of truss fabricator. General practice is to camber for dead load deflection.
11. Plate type, size, orientation and location dimensions indicated are minimum plating requirements.
12. Lumber used shall be of the species and size, and in all respects, equal to or better than that specified.
13. Top chords must be sheathed or purlins provided at spacing indicated on design.
14. Bottom chords require lateral bracing at 10 ft. spacing, or less, if no ceiling is installed, unless otherwise noted.
15. Connections not shown are the responsibility of others.
16. Do not cut or alter truss member or plate without prior approval of an engineer.
17. Install and load vertically unless indicated otherwise.
18. Use of green or treated lumber may pose unacceptable environmental, health or performance risks. Consult with project engineer before use.
19. Review all portions of this design (front, back, words and pictures) before use. Reviewing pictures alone is not sufficient.
20. Design assumes manufacture in accordance with ANSI/TPI 1 Quality Criteria.

GEO-TECH, INC.

Engineering Consultants in Geotechnical • Environmental • Construction Materials Testing

2751B

FIELD DENSITY WORKSHEET

CLIENT MARONDA HOMES — DATE 10 DEC 08

JOB# 9TM02801 — PROJECT NO.

PROJECT NAME TIMBERLANDS LOT #28 — PERMIT NO.

~~EARTH CONTRACTOR~~ 252 SW MULLBERRY DR. — TESTED BY JMC

COMPACTION REQUIREMENT (%) 95% ☐ Standard Proctor ☑ Modified Proctor — PATRICK FIELD CONTACT

TOTAL ON-SITE TIME — MILES FROM OFFICE

☐ Limerock ☐ Subgrade ☐ Pipe Backfill ☑ Building Pad ☑ Building Footing ☐ Other

TEST LOCATION	LAB PROCTOR DENS.	LAB PROCTOR OMC	TEST DEPTH	PROBE DEPTH	% MOIST.	WET DENSITY (PCF)	DRY DENSITY (PCF)	% COMP.
CTR. of PAD	105.8	10.7	FT	12"	4.6	106.5	101.8	96.2
CTR. of W. FTG	L	L	L	L	5.2	106.1	100.8	95.3
CTR. of S. FTG.	L	L	L	L	5.0	105.5	100.5	95.0

REMARKS

* Density failed to meet minimum project requirement

** Retest indicates minimum density requirement was obtained.

( ) Client is aware of unsatisfactory test results.

2603 NW 74TH PLACE • GAINESVILLE, FLORIDA 32653 • PHONE: (352) 372-1274 • FAX: (352) 372-2721

CERTIFICATE OF

OCCUPANCY

COLUMBIA COUNTY, FLORIDA

Department of Building and Zoning Inspection

This Certificate of Occupancy is issued to the below named permit holder for the building and premises at the below named location, and certifies that the work has been completed in accordance with the Columbia County Building Code.

Parcel Number 10-4S-16-02856-128

Building permit No. 000027518

Use Classification SFD,UTILITY

Fire: 44.94

Permit Holder THEODORE BROCK

Waste: 117.25

Owner of Building MARONDA HOMES

Total: 162.19

Location: 252 SW MULBERRY DR., LAKE CITY, FL

Date: 03/23/2009

Wayne A. Russ

Building Inspector

POST IN A CONSPICUOUS PLACE
(Business Places Only)