DATE 04/02/2013

Columbia County Building Permit

This Permit Must Be Prominently Posted on Premises During Construction

PERMIT
000030893

APPLICANT MICHAEL R. NICHOLSON PHONE 386.623.2376

ADDRESS 141 SW HUMMINGBIRD GLN LAKE CITY FL 32024

OWNER KENT W. GEARTZ(TRUSTEE) PHONE 941.755.9661

ADDRESS 5610 33RD STREET E BRADENTON FL 34203

CONTRACTOR KENT W. GEARTZ PHONE 941.755.9661

LOCATION OF PROPERTY 90-W TO SR.247-S,TL TO MAYFAIR S.D., TR TO VANN,TR AND IT'S THE 4TH LOT ON R.

TYPE DEVELOPMENT SFD/UTILITY ESTIMATED COST OF CONSTRUCTION 112200.00

HEATED FLOOR AREA 1435.00 TOTAL AREA 2244.00 HEIGHT 16.00 STORIES 1

FOUNDATION CONC WALLS FRAMED ROOF PITCH 5'12 FLOOR CONC

LAND USE & ZONING RSF-2 MAX. HEIGHT 35

Minimum Set Back Requirments: STREET-FRONT 25.00 REAR 15.00 SIDE 10.00

NO. EX.D.U. 0 FLOOD ZONE X DEVELOPMENT PERMIT NO.

PARCEL ID 11-4S-16-02911-305 SUBDIVISION MAYFAIR

LOT 5 BLOCK PHASE UNIT 3 TOTAL ACRES 0.51

000002000		CBC059552	
Culvert Permit No.	Culvert Waiver	Contractor's License Number	Applicant/Owner/Contractor

PWD	13-0126	BLK	TC	
Driveway Connection	Septic Tank Number	LU & Zoning checked by	Approved for Issuance	New Resident

COMMENTS: ELEVATION CONFIRMATION LETTER @ SLAB. MFE @ 164.0'.

Check # or Cash 1003

FOR BUILDING & ZONING DEPARTMENT ONLY

(footer/Slab)

Temporary Power _____ date/app. by Foundation _____ date/app. by Monolithic _____ date/app. by

Under slab rough-in plumbing _____ date/app. by Slab _____ date/app. by Sheathing/Nailing _____ date/app. by

Framing _____ date/app. by Insulation _____ date/app. by

Rough-in plumbing above slab and below wood floor _____ date/app. by Electrical rough-in _____ date/app. by

Heat & Air Duct _____ date/app. by Peri. beam (Lintel) _____ date/app. by Pool _____ date/app. by

Permanent power _____ date/app. by C.O. Final _____ date/app. by Culvert _____ date/app. by

Pump pole _____ date/app. by Utility Pole _____ date/app. by M/H tie downs, blocking, electricity and plumbing _____ date/app. by

Reconnection _____ date/app. by RV _____ date/app. by Re-roof _____ date/app. by

BUILDING PERMIT FEE $ 565.00 CERTIFICATION FEE $ 11.22 SURCHARGE FEE $ 11.22

MISC. FEES $ 0.00 ZONING CERT. FEE $ 50.00 FIRE FEE $ 0.00 WASTE FEE $

FLOOD DEVELOPMENT FEE $ FLOOD ZONE FEE $ 25.00 CULVERT FEE $ 25.00 **TOTAL FEE** 687.44

INSPECTORS OFFICE CLERKS OFFICE CH

NOTICE: IN ADDITION TO THE REQUIREMENTS OF THIS PERMIT, THERE MAY BE ADDITIONAL RESTRICTIONS APPLICABLE TO THIS PROPERTY THAT MAY BE FOUND IN THE PUBLIC RECORDS OF THIS COUNTY.

NOTICE: ALL OTHER APPLICABLE STATE OR FEDERAL PERMITS SHALL BE OBTAINED BEFORE COMMENCEMENT OF THIS PERMITTED DEVELOPMENT.

"WARNING TO OWNER: YOUR FAILURE TO RECORD A NOTICE OF COMMENCEMENT MAY RESULT IN YOUR PAYING TWICE FOR IMPROVEMENTS TO YOUR PROPERTY. IF YOU INTEND TO OBTAIN FINANCING, CONSULT WITH YOUR LENDER OR AN ATTORNEY BEFORE RECORDING YOUR NOTICE OF COMMENCEMENT."

EVERY PERMIT ISSUED SHALL BECOME INVALID UNLESS THE WORK AUTHORIZED BY SUCH PERMIT IS COMMENCED WITHIN 180 DAYS AFTER ITS ISSUANCE, OR IF THE WORK AUTHORIZED BY SUCH PERMIT IS SUSPENDED OR ABANDONED FOR A PERIOD OF 180 DAYS AFTER THE TIME THE WORK IS COMMENCED. A VALID PERMIT RECIEVES AN APPROVED INSPECTION EVERY 180 DAYS. WORK SHALL BE CONSIDERED NOT SUSPENDED, ABANDONED OR INVALID WHEN THE PERMIT HAS RECIEVED AN APPROVED INSPECTION WITHIN 180 DAYS OT THE PREVIOUS INSPECTION.

The Issuance of this Permit Does Not Waive Compliance by Permittee with Deed Restrictions.

CERTIFICATE OF

OCCUPANCY

COLUMBIA COUNTY, FLORIDA

Department of Building and Zoning Inspection

This Certificate of Occupancy is issued to the below named permit holder for the building and premises at the below named location, and certifies that the work has been completed in accordance with the Columbia County Building Code.

Parcel Number 11-4S-16-02911-305 **Building permit No.** 000030893

Use Classification SFD/UTILITY **Fire:** 12.84

Permit Holder KENT W. GEARTZ **Waste:** 33.50

Owner of Building KENT W. GEARTZ(TRUSTEE) **Total:** 46.34

Location: 189 SW VANN CT, LAKE CITY, FL 32024

Date: 08/26/2013

Building Inspector

POST IN A CONSPICUOUS PLACE
(Business Places Only)

Notice of Treatment

Applicator: Florida Pest Control · (www.flapest .com)
Address: 536 SE Baya Dr.
City Lake City, FL Phone 752-1703

Site Location: Subdivision
Lot # Block# Permit # 30893
Address

Product used	Active Ingredient	% Concentration
☒ Premise	Imidacloprid	0.1%
☐ Termidor	Fipronil	0.12%
☐		

Type treatment: ☑ Soil

Area Treated	Square feet	Linear feet	Gallons Applied
Main body	2244	203	196

As per Florida Building Code 104.2.6 – If soil chemical barrier method for termite prevention is used, final exterior treatment shall be completed prior to final building approval.

If this notice is for the final exterior treatment, initial this line _____

4-23-13	8:45	B. HENDRICKS
Date	Time	Print Technician's Name

Remarks:

Applicator - White Permit File - Canary Permit Holder - Pink

2/12 ©

FORM 405-10

FLORIDA ENERGY EFFICIENCY CODE FOR BUILDING CONSTRUCTION

Florida Department of Business and Professional Regulation - Residential Performance Method

Project Name:	Taylor Model	Builder Name:	M. Nicholson
Street:		Permit Office:	Columbia Co
City, State, Zip:	Lake city , FL , 32055-	Permit Number:	
Owner:	Nicholson	Jurisdiction:	121000
Design Location:	FL, Gainesville		

1. New construction or existing	New (From Plans)
2. Single family or multiple family	Single-family
3. Number of units, if multiple family	1
4. Number of Bedrooms	3
5. Is this a worst case?	No
6. Conditioned floor area above grade (ft²)	1435
Conditioned floor area below grade (ft²)	0

7. Windows(145.4 sqft.)	Description	Area
a. U-Factor:	Dbl, U=0.55	145.39 ft²
SHGC:	SHGC=0.50	
b. U-Factor:	N/A	ft²
SHGC:		
c. U-Factor:	N/A	ft²
SHGC:		
d. U-Factor:	N/A	ft²
SHGC:		
Area Weighted Average Overhang Depth:		5.624 ft.
Area Weighted Average SHGC:		0.500

8. Floor Types (1435.0 sqft.)	Insulation	Area
a. Slab-On-Grade Edge Insulation	R=0.0	1435.00 ft²
b. N/A	R=	ft²
c. N/A	R=	ft²

9. Wall Types (1232.0 sqft.)	Insulation	Area
a. Frame - Wood, Exterior	R=13.0	1232.00 ft²
b. N/A	R=	ft²
c. N/A	R=	ft²
d. N/A	R=	ft²

10. Ceiling Types (1435.0 sqft.)	Insulation	Area
a. Under Attic (Vented)	R=30.0	1435.00 ft²
b. N/A	R=	ft²
c. N/A	R=	ft²

11. Ducts	R	ft²
a. Sup: Attic, Ret: Attic, AH: Main	6	287

12. Cooling systems	kBtu/hr	Efficiency
a. Central Unit	35.0	SEER:14.00

13. Heating systems	kBtu/hr	Efficiency
a. Electric Heat Pump	35.0	HSPF:7.70

14. Hot water systems
a. Electric — Cap: 40 gallons, EF: 0.920
b. Conservation features
None

15. Credits — CF, Pstat

Glass/Floor Area: 0.101

Total Proposed Modified Loads: 26.28
Total Standard Reference Loads: 33.82

PASS

I hereby certify that the plans and specifications covered by this calculation are in compliance with the Florida Energy Code.

PREPARED BY: T. A. Oellrich
DATE: 2/18/13

I hereby certify that this building, as designed, is in compliance with the Florida Energy Code.

OWNER/AGENT: _____
DATE: _____

Review of the plans and specifications covered by this calculation indicates compliance with the Florida Energy Code. Before construction is completed this building will be inspected for compliance with Section 553.908 Florida Statutes.

GREAT SEAL OF THE STATE OF FLORIDA — IN GOD WE TRUST

BUILDING OFFICIAL: _____
DATE: _____

COLUMBIA COUNTY BUILDING DEPARTMENT — Received for FILE COPY — Code Compliance — PLANS EXAMINER

- Compliance requires completion of a Florida Air Barrier and Insulation Inspection Checklist

PROJECT

Title:	Taylor Model	Bedrooms:	3	Address Type:	Lot Information
Building Type:	User	Conditioned Area:	1435	Lot #	5
Owner:	Nicholson	Total Stories:	1	Block/SubDivision:	May-fair Unit 3
# of Units:	1	Worst Case:	No	PlatBook:	
Builder Name:	M. Nicholson	Rotate Angle:	0	Street:	
Permit Office:	Columbia Co	Cross Ventilation:		County:	Columbia
Jurisdiction:	121000	Whole House Fan:		City, State, Zip:	Lake city , FL , 32055-
Family Type:	Single-family				
New/Existing:	New (From Plans)				
Comment:					

CLIMATE

√	Design Location	TMY Site	IECC Zone	Design Temp 97.5 %	Design Temp 2.5 %	Int Design Temp Winter	Int Design Temp Summer	Heating Degree Days	Design Moisture	Daily Temp Range
_____	FL, Gainesville	FL_GAINESVILLE_REGI	2	32	92	70	75	1305.5	51	Medium

BLOCKS

Number	Name	Area	Volume
1	Block1	1435	11480

SPACES

Number	Name	Area	Volume	Kitchen	Occupants	Bedrooms	Infil ID	Finished	Cooled	Heated
1	Main	1435	11480	Yes	3	3	1	Yes	Yes	Yes

FLOORS

√	#	Floor Type	Space	Perimeter	R-Value	Area		Tile	Wood	Carpet
_____	1	Slab-On-Grade Edge Insulatio	Main	199 ft	0	1435 ft²	----	0.3	0	0.7

ROOF

√	#	Type	Materials	Roof Area	Gable Area	Roof Color	Solar Absor.	SA Tested	Emitt	Emitt Tested	Deck Insul.	Pitch (deg)
_____	1	Hip	Composition shingles	1554 ft²	0 ft²	Medium	0.96	No	0.9	No	0	22.6

ATTIC

√	#	Type	Ventilation	Vent Ratio (1 in)	Area	RBS	IRCC
_____	1	Full attic	Vented	300	1435 ft²	N	N

CEILING

√	#	Ceiling Type	Space	R-Value	Area	Framing Frac	Truss Type
_____	1	Under Attic (Vented)	Main	30	1435 ft²	0.11	Wood

WALLS

√	#	Ornt	Adjacent To	Wall Type	Space	Cavity R-Value	Width Ft	Width In	Height Ft	Height In	Area	Sheathing R-Value	Framing Fraction	Solar Absor.	Below Grade%
____	1	E	Exterior	Frame - Wood	Main	13	58		8		464 ft²		0.23	0.75	0
____	2	S	Exterior	Frame - Wood	Main	13	19	4	8	0	154.6666		0.23	0.75	0
____	3	W	Exterior	Frame - Wood	Main	13	38		8		304 ft²		0.23	0.75	0
____	4	N	Exterior	Frame - Wood	Main	13	38	8	8	0	309.3333		0.23	0.75	0

DOORS

√	#	Ornt	Door Type	Space	Storms	U-Value	Width Ft	Width In	Height Ft	Height In	Area
_____	1	W	Insulated	Main	Metal	0.28	3	0	6	8	20 ft²

WINDOWS

Orientation shown is the entered, Proposed orientation.

√	#	Ornt	Wall ID	Frame	Panes	NFRC	U-Factor	SHGC	Area	Overhang Depth	Overhang Separation	Int Shade	Screening
_____	1	E	1	Vinyl	Low-E Double	Yes	0.55	0.5	49.83333	10 ft 0 in	0 ft 4 in	Drapes/blinds	None
_____	2	E	1	Vinyl	Low-E Double	Yes	0.55	0.5	7.111111	8 ft 0 in	0 ft 4 in	Drapes/blinds	None
_____	3	E	1	Vinyl	Low-E Double	Yes	0.55	0.5	24.88888	2 ft 0 in	0 ft 4 in	Drapes/blinds	None
_____	4	E	1	Vinyl	Low-E Double	Yes	0.55	0.5	12.44444	2 ft 0 in	0 ft 4 in	Drapes/blinds	None
_____	5	W	3	Vinyl	Low-E Double	Yes	0.55	0.5	17.11111	7 ft 0 in	0 ft 4 in	Drapes/blinds	None
_____	6	W	3	Vinyl	Low-E Double	Yes	0.55	0.5	17.11111	2 ft 0 in	0 ft 4 in	Drapes/blinds	None
_____	7	N	4	Vinyl	Low-E Double	Yes	0.55	0.5	4.444444	2 ft 0 in	0 ft 4 in	Drapes/blinds	None
_____	8	N	4	Vinyl	Low-E Double	Yes	0.55	0.5	12.44444	2 ft 0 in	0 ft 4 in	Drapes/blinds	None

INFILTRATION

#	Scope	Method	SLA	CFM 50	ELA	EqLA	ACH	ACH 50
1	Wholehouse	Best Guess	0.000300	1129.2	61.992	116.58	0.2310	5.9017

HEATING SYSTEM

√	#	System Type	Subtype	Efficiency	Capacity	Block	Ducts
_____	1	Electric Heat Pump	None	HSPF: 7.7	35 kBtu/hr	1	sys#1

COOLING SYSTEM

√	#	System Type	Subtype	Efficiency	Capacity	Air Flow	SHR	Block	Ducts
_____	1	Central Unit	Split	SEER: 14	35 kBtu/hr	1050 cfm	0.75	1	sys#1

HOT WATER SYSTEM

√	#	System Type	SubType	Location	EF	Cap	Use	SetPnt	Conservation
_____	1	Electric	None	Main	0.92	40 gal	60 gal	120 deg	None

SOLAR HOT WATER SYSTEM

√	FSEC Cert #	Company Name	System Model #	Collector Model #	Collector Area	Storage Volume	FEF
_____	None	None			ft²		

DUCTS

√	#	---- Supply ---- Location	R-Value	Area	---- Return ---- Location	Area	Leakage Type	Air Handler	CFM 25	Percent Leakage	QN	RLF	HVAC # Heat	Cool
_____	1	Attic	6	287 ft²	Attic	71.75 ft	Default Leakage	Main	(Default)	(Default) %			1	1

TEMPERATURES

Programable Thermostat: Y

Ceiling Fans:

	Jan	Feb	Mar	Apr	May	Jun	Jul	Aug	Sep	Oct	Nov	Dec
Cooling	[ ]	[ ]	[ ]	[ ]	[ ]	[X]	[X]	[X]	[X]	[ ]	[ ]	[ ]
Heating	[X]	[X]	[X]	[ ]	[ ]	[ ]	[ ]	[ ]	[ ]	[ ]	[X]	[X]
Venting	[ ]	[ ]	[X]	[X]	[ ]	[ ]	[ ]	[ ]	[ ]	[X]	[X]	[ ]

Thermostat Schedule: HERS 2006 Reference

Schedule Type		Hours 1	2	3	4	5	6	7	8	9	10	11	12
Cooling (WD)	AM	78	78	78	78	78	78	78	78	80	80	80	80
	PM	80	80	78	78	78	78	78	78	78	78	78	78
Cooling (WEH)	AM	78	78	78	78	78	78	78	78	78	78	78	78
	PM	78	78	78	78	78	78	78	78	78	78	78	78
Heating (WD)	AM	66	66	66	66	66	68	68	68	68	68	68	68
	PM	68	68	68	68	68	68	68	68	68	68	66	66
Heating (WEH)	AM	66	66	66	66	66	68	68	68	68	68	68	68
	PM	68	68	68	68	68	68	68	68	68	68	66	66

FORM 405-10

Florida Code Compliance Checklist

Florida Department of Business and Professional Regulations
Residential Whole Building Performance Method

ADDRESS:	PERMIT #:
Lake city, FL, 32055-	

MANDATORY REQUIREMENTS SUMMARY - See individual code sections for full details.

COMPONENT	SECTION	SUMMARY OF REQUIREMENT(S)	CHECK
Air leakage	402.4	To be caulked, gasketed, weatherstripped or otherwise sealed. Recessed lighting IC-rated as meeting ASTM E 283. Windows and doors = 0.30 cfm/sq.ft. Testing or visual inspection required. Fireplaces: gasketed doors & outdoor combustion air. Must complete envelope leakage report or visually verify Table 402.4.2.	✓
Thermostat & controls	403.1	At least one thermostat shall be provided for each separate heating and cooling system. Where forced-air furnace is primary system, programmable thermostat is required. Heat pumps with supplemental electric heat must prevent supplemental heat when compressor can meet the load.	✓
Ducts	403.2.2 403.3.3	All ducts, air handlers, filter boxes and building cavities which form the primary air containment passageways for air distribution systems shall be considered ducts or plenum chambers, shall be constructed and sealed in accordance with Section 503.2.7.2 of this code. Building framing cavities shall not be used as supply ducts.	✓
Water heaters	403.4	Heat trap required for vertical pipe risers. Comply with efficiencies in Table 403.4.3.2. Provide switch or clearly marked circuit breaker (electric) or shutoff (gas). Circulating system pipes insulated to = R-2 + accessible manual OFF switch.	✓
Mechanical ventilation	403.5	Homes designed to operate at positive pressure or with mechanical ventilation systems shall not exceed the minimum ASHRAE 62 level. No make-up air from attics, crawlspaces, garages or outdoors adjacent to pools or spas.	✓
Swimming Pools & Spas	403.9	Pool pumps and pool pump motors with a total horsepower (HP) of = 1 HP shall have the capability of operating at two or more speeds. Spas and heated pools must have vapor-retardant covers or a liquid cover or other means proven to reduce heat loss except if 70% of heat from site-recovered energy. Off/timer switch required. Gas heaters minimum thermal efficiency=78% (82% after 4/16/13). Heat pump pool heaters minimum COP= 4.0.	N/A
Cooling/heating equipment	403.6	Sizing calculation performed & attached. Minimum efficiencies per Tables 503.2.3. Equipment efficiency verification required. Special occasion cooling or heating capacity requires separate system or variable capacity system. Electric heat >10kW must be divided into two or more stages.	✓
Ceilings/knee walls	405.2.1	R-19 space permitting.	✓

COLUMBIA COUNTY BUILDING DEPARTMENT
RESIDENTIAL CHECK LIST

MINIMUM PLAN REQUIREMENTS: FLORIDA BUILDING CODE RESIDENTIAL 2010 EFFECTIVE 15 MARCH 2012 AND THE NATIONAL ELECTRICAL 2008 EFFECTIVE 1 OCTOBER 2009

ALL REQUIREMENTS ARE SUBJECT TO CHANGE

ALL BUILDING PLANS MUST INDICATE COMPLIANCE WITH THE CURRENT 2010 FLORIDA BUILDING CODES RESIDENTIAL, EFFECTIVE 15 MARCH 2012. NATIONAL ELECTRICAL CODE 2008 EFFECTIVE 1 OCTOBER 2009. ALL PLANS OR DRAWINGS SHALL PROVIDE CALCULATIONS AND DETAILS THAT HAVE THE SEAL AND SIGNATURE OF A CERTIFIED ARCHITECT OR ENGINEER REGISTERED IN THE STATE OF FLORIDA, OR ALTERNATE METHODOLOGIES, APPROVED BY THE STATE OF FLORIDA BUILDING COMMISSION FOR ONE-AND-TWO FAMILY DWELLINGS.

FOR DESIGN PURPOSES THE FOLLOWING BASIC WIND SPEEDS ARE PER FLORIDA BUILDING CODE FIGURE 1609-A THROUGH 1609-C ULTIMATE DESIGN WIND SPEEDS FOR RISK CATEGORY AND BUILDINGS AND OTHER STRUCTURES

	GENERAL REQUIREMENTS: APPLICANT – PLEASE CHECK ALL APPLICABLE BOXES BEFORE SUBMITTAL			Items to Include- Each Box shall be Circled as Applicable		
				Yes	No	N/A
1	Two (2) complete sets of plans containing the following:			✓		
2	All drawings must be clear, concise, drawn to scale, details that are not used shall be marked void			✓		
3	Condition space (Sq. Ft.)		Total (Sq. Ft.) under roof	IIIIIIII	IIIIIIII	IIIII

Designers name and signature shall be on all documents and a licensed architect or engineer, signature and official embossed seal shall be affixed to the plans and documents as per the FLORIDA BUILDING CODES RESIDENTIAL R101.2.1

Site Plan information including:

4	Dimensions of lot or parcel of land	✓		
5	Dimensions of all building set backs	✓		
6	Location of all other structures (include square footage of structures) on parcel, existing or proposed well and septic tank and all utility easements.	✓		
7	Provide a full legal description of property.	✓		

Wind-load Engineering Summary, calculations and any details are required.

	GENERAL REQUIREMENTS: APPLICANT – PLEASE CHECK ALL APPLICABLE BOXES BEFORE SUBMITTAL	Items to Include- Each Box shall be Circled as Applicable		
8	**Plans or specifications must show compliance with FBCR Chapter 3**	IIIIII	IIIII	IIIIII
		YES	NO	N/A
9	Basic wind speed (3-second gust), miles per hour	✓		
10	(Wind exposure – if more than one wind exposure is used, the wind exposure and applicable wind direction shall be indicated)	✓		
11	Wind importance factor and nature of occupancy	✓		
12	The applicable internal pressure coefficient, Components and Cladding	✓		
13	The design wind pressure in terms of psf (kN/m²), to be used for the design of exterior component, cladding materials not specifally designed by the registered design professional.	✓		

Elevations Drawing including:

14	All side views of the structure	✓		
15	Roof pitch	✓		
16	Overhang dimensions and detail with attic ventilation	✓		
17	Location, size and height above roof of chimneys	✓		
18	Location and size of skylights with Florida Product Approval	✓		
18	Number of stories	✓		
20A	Building height from the established grade to the roofs highest peak	✓		

Floor Plan including:

20	Dimensioned area plan showing rooms, attached garage, breeze ways, covered porches, deck, balconies	✓		
21	Raised floor surfaces located more than 30 inches above the floor or grade	✓		
22	All exterior and interior shear walls indicated	✓		
23	Shear wall opening shown (Windows, Doors and Garage doors)	✓		
24	Show compliance with Section FBCR 310 Emergency escape and rescue opening shown in each bedroom (net clear opening shown) and Show compliance with Section FBC 1405.13.2 where the opening of an operable window is located more than 72 inches above the finished grade or surface below, the lowest part of the clear opening of the window shall be a minimum of 24 inches above the finished floor of the room in which the window is located. Glazing between the floor and 24 inches shall be fixed or have openings through which a 4-inch-diameter sphere cannot pass.	✓		
25	Safety glazing of glass where needed	✓		
26	Fireplaces types (gas appliance) (vented or non-vented) or wood burning with Hearth (see chapter 10 and chapter 24 of FBCR)	✓		
27	Show stairs with dimensions (width, tread and riser and total run) details of guardrails, Handrails	✓		
28	Identify accessibility of bathroom (see FBCR SECTION 320)	✓		

All materials placed within opening or onto/into exterior walls, soffits or roofs shall have Florida product approval number and mfg. installation information submitted with the plan (see Florida product approval form)

GENERAL REQUIREMENTS: APPLICANT – PLEASE CHECK ALL APPLICABLE BOXES BEFORE SUBMITTAL	Items to Include- Each Box shall be Circled as Applicable

FBCR 403: Foundation Plans

		YES	NO	N/A
29	Location of all load-bearing walls footings indicated as standard, monolithic, dimensions, size and type of reinforcing.	✓		
30	All posts and/or column footing including size and reinforcing	✓		
31	Any special support required by soil analysis such as piling.			✓
32	Assumed load-bearing valve of soil_____ Pound Per Square Foot			✓
33	Location of horizontal and vertical steel, for foundation or walls (include # size and type) **For** structures with foundation which establish new electrical utility companies service connection a Concrete Encased Electrode will be required within the foundation to serve as an grounding electrode system. Per the National Electrical Code article 250.52.3	✓		

FBCR 506: CONCRETE SLAB ON GRADE

34	Show Vapor retarder (6mil. Polyethylene with joints lapped 6 inches and sealed)			
35	Show control joints, synthetic fiber reinforcement or welded fire fabric reinforcement and Supports			

FBCR 318: PROTECTION AGAINST TERMITES

36	Indicate on the foundation plan if soil treatment is used for subterranean termite prevention or Submit other approved termite protection methods. **Protection shall be provided by registered termiticides**	✓		

FBCR 606: Masonry Walls and Stem walls (load bearing & shear Walls)

37	Show all materials making up walls, wall height, and Block size, mortar type	✓		
38	Show all Lintel sizes, type, spans and tie-beam sizes and spacing of reinforcement	✓		

Metal frame shear wall and roof systems shall be designed, signed and sealed by Florida Prof. Engineer or Architect

Floor Framing System: First and/or second story

39	Floor truss package shall including layout and details, signed and sealed by Florida Registered Professional Engineer	✓		
40	Show conventional floor joist type, size, span, spacing and attachment to load bearing walls, stem walls and/or priers	✓		
41	Girder type, size and spacing to load bearing walls, stem wall and/or priers	✓		
42	Attachment of joist to girder	✓		
43	Wind load requirements where applicable	✓		
44	Show required under-floor crawl space			✓
45	Show required amount of ventilation opening for under-floor spaces			✓
46	Show required covering of ventilation opening			✓
47	Show the required access opening to access to under-floor spaces			✓
48	Show the sub-floor structural panel sheathing type, thickness and fastener schedule on the edges & interi of the areas structural panel sheathing			✓

49	Show Draftstopping, Fire caulking and Fire blocking			✓
50	Show fireproofing requirements for garages attached to living spaces, per FBCR section 302.6			✓
51	Provide live and dead load rating of floor framing systems (psf).			✓

FBCR CHAPTER 6 WOOD WALL FRAMING CONSTRUCTION

	GENERAL REQUIREMENTS: APPLICANT – PLEASE CHECK ALL APPLICABLE BOXES BEFORE SUBMITTAL	Items to Include- Each Box shall be Circled as Applicable		
		YES	NO	N/A
52	Stud type, grade, size, wall height and oc spacing for all load bearing or shear walls	✓		
53	Fastener schedule for structural members per table IRC 602.3 are to be shown	✓		
54	Show Wood structural panel's sheathing attachment to studs, joist, trusses, rafters and structural members, showing fastener schedule attachment on the edges & intermediate of the areas structural panel sheathing	✓		
55	Show all required connectors with a max uplift rating and required number of connectors and oc spacing for continuous connection of structural walls to foundation and roof trusses or rafter systems	✓		
56	Show sizes, type, span lengths and required number of support jack studs, king studs for shear wall opening and girder or header per IRC Table 502.5 (1)	✓		
57	Indicate where pressure treated wood will be placed	✓		
58	Show all wall structural panel sheathing, grade, thickness and show fastener schedule for structural panel sheathing edges & intermediate areas	✓		
59	A detail showing gable truss bracing, wall balloon framing details or/ and wall hinge bracing detail	✓		

FBCR :ROOF SYSTEMS:

60	Truss design drawing shall meet section FBCR 802.1.6.1 Wood trusses	✓		
61	Include a layout and truss details, signed and sealed by Florida Professional Engineer	✓		
62	Show types of connector's assemblies' and resistance uplift rating for all trusses and rafters	✓		
63	Show gable ends with rake beams showing reinforcement or gable truss and wall bracing details	✓		
64	Provide dead load rating of trusses	✓		

FBCR 802:Conventional Roof Framing Layout

65	Rafter and ridge beams sizes, span, species and spacing			
66	Connectors to wall assemblies' include assemblies' resistance to uplift rating			
67	Valley framing and support details			
68	Provide dead load rating of rafter system			

FBCR 803 ROOF SHEATHING

69	Include all materials which will make up the roof decking, identification of structural panel sheathing, grade, thickness	✓		
70	Show fastener Size and schedule for structural panel sheathing on the edges & intermediate areas	✓		

ROOF ASSEMBLIES FRC Chapter 9

71	Include all materials which will make up the roof assembles covering	✓		
72	Submit Florida Product Approval numbers for each component of the roof assembles covering	✓		

FBCR Chapter 11 Energy Efficiency Code for residential building

Residential construction shall comply with this code by using the following compliance methods in the FBCR chapter11 Residential buildings compliance methods. **Two of the required forms are to be submitted**, *N1100.1.1.1 As an alternative to the computerized Compliance Method A, the Alternate Residential Point System Method hand calculation, Alternate Form 600A, may be used. All requirements specific to this calculation are located in Sub appendix C to Appendix G. Buildings complying by this alternative shall meet all mandatory requirements of this chapter. Computerized versions of the Alternate Residential Point System Method shall not be acceptable for code compliance.*

	GENERAL REQUIREMENTS: APPLICANT – PLEASE CHECK ALL APPLICABLE BOXES BEFORE SUBMITTAL	Items to Include- Each Box shall be Circled as Applicable		
		YES	**NO**	**N/A**
73	Show the insulation R value for the following areas of the structure	✓		
74	Attic space	✓		
75	Exterior wall cavity	✓		
76	Crawl space			✓

HVAC information

77	Submit two copies of a Manual J sizing equipment or equivalent computation study	✓		
78	Exhaust fans shown in bathrooms **Mechanical exhaust capacity of 50 cfm intermittent or 20 cfm continuous required**	✓		
79	Show clothes dryer route and total run of exhaust duct	✓		

Plumbing Fixture layout shown

80	All fixtures waste water lines shall be shown on the foundation plan	✓		
81	Show the location of water heater	✓		

Private Potable Water

82	Pump motor horse power	✓		~~✓~~
83	Reservoir pressure tank gallon capacity	✓		~~✓~~
84	Rating of cycle stop valve if used	✓		~~✓~~

Electrical layout shown including

85	Show Switches, receptacles outlets, lighting fixtures and Ceiling fans	✓		
86	Show all 120-volt, single phase, 15- and 20-ampere branch circuits outlets required to be protected by **Ground-Fault Circuit Interrupter (GFCI) Article 210.8 A**	✓		
87	Show the location of smoke detectors & Carbon monoxide detectors	✓		
88	Show service panel, sub-panel, location(s) and total ampere ratings	✓		
89	On the electrical plans identify the electrical service overcurrent protection device for the main electrical service. This device shall be installed on the exterior of structures to serve as a disconnecting means for the utility company electrical service. Conductors used from the exterior disconnecting means to a panel or sub panel shall have four-wire conductors, of which one conductor shall be used as an equipment ground. Indicate if the utility company service entrance cable will be of the overhead or underground type. **For structures** with foundation which establish new electrical utility companies service connection a Concrete Encased Electrode will be required within the foundation to serve as an Grounding electrode system. Per the National Electrical Code article 250.52.3	✓		

90	Appliances and HVAC equipment and disconnects	✓		
91	Show all 120-volt, single phase, 15- and 20-ampere branch circuits supplying outlets installed in dwelling unit family rooms, dining rooms, living rooms, parlors, libraries, dens, bedrooms, sunrooms, recreation rooms, closets, hallways, or similar rooms or areas shall be protected by a listed **Combination arc-fault circuit interrupter,** Protection device.	✓		

✓ **Disclosure Statement for Owner Builders** *If you as the applicant will be acting as an owner/builder under section 489.103(7) of the Florida Statutes, submit the required owner builder disclosure statement form.*

✓ **Notice Of Commencement**

A notice of commencement form **recorded** in the Columbia County Clerk Office is required to be filed with the building department Before Any Inspections can be preformed.

GENERAL REQUIREMENTS: APPLICANT – PLEASE CHECK ALL APPLICABLE BOXES BEFORE SUBMITTAL	Items to Include- Each Box shall be Circled as Applicable

THE FOLLOWING ITEMS MUST BE SUBMITTED WITH BUILDING PLANS

		YES	NO	N/A
92	**Building Permit Application** A current On-Line Building Permit Application www.ccpermit.com is to be completed, by following the Checklist all supporting documents must be submitted. There is a **$15.00** application fee.	✓		
93	**Parcel Number** The parcel number (Tax ID number) from the Property Appraisers Office (386) 758-1083 is required. A copy of property deed is also requested. www.columbiacountyfla.com	✓		
94	**Environmental Health Permit or Sewer Tap Approval** A copy of a approved Columbia County Environmental Health (386) 758-1058	✓		
95	**City of Lake City** A permit showing an approved waste water sewer tap 386-752-2031			✓
96	**Toilet facilities shall be provided for all construction sites**	✓		
97	**Town of Fort White** (386) 497-2321 If the parcel in the application for building permit is within the Corporate city limits of Fort White, an approval land use development letter issued by the Town of Fort is required to be submitted with the application for a building permit.			✓
98	**Flood Information:** All projects within the Floodway of the Suwannee or Santa Fe Rivers shall require permitting through the Suwannee River Water Management District, before submitting a application to this office. Any project located within a flood zone where the base flood elevation (100 year flood) has been established shall meet the requirements of Section 8.5.2 of the Columbia County Land Development Regulations. Any project located within a flood zone where the base flood elevation has not been established (Zone A) shall meet the requirements of Section 8.5.3 of the Columbia County Land Development Regulations	✓		
99	**CERTIFIED FINISHED FLOOR ELEVATIONS** will be required on any project where the approved FIRM Flood Maps show the property is in a AE, Floodway, and AH flood zones. Additionally One Foot Rise letters are required for AE and AH zones. In the Floodway Flood zones a Zero Rise letter is required.	✓		
100	A Flood development permit is also required for AE, Floodway & AH. Development permit cost is **$50.00**			✓
101	**Driveway Connection:** If the property does not have an existing access to a public road, then an application for a culvert permit (**$25.00**) must be made. County Public Works Dept. determines the size and length of every culvert before instillation and completes a final inspection before permanent power is granted. If the applicant feels that a culvert is not needed, they may apply for a culvert waiver (**$50.00**) Separate Check when issued. If the project is to be located on an F.D.O.T. maintained road, then an F.D.O.T. access permit is required.			✓
102	**911 Address:** An application for a 911address must be applied for and **received** through the Columbia County Emergency Management Office of 911 Addressing Department (386) 758-1125 Ext. 3	✓		

Section R101.2.1 of the Florida Building Code Residential:

The provisions of Chapter 1, Florida Building Code shall govern the administration and enforcement of the Florida Building Code, Residential.

Section 105 of the Florida Building Code defines the:

Time limitation of application.
An application for a permit for any proposed work shall be deemed to have been abandoned 180 days after the date of filing, unless such application has been pursued in good faith or a permit has been issued; except that the building official is authorized to grant one or more extensions of time for additional periods not exceeding 90 days each. The extension shall be requested in writing and justifiable cause demonstrated.

Single-family residential dwelling.
Section 105.3.4 A building permit for a single-family residential dwelling must be issued within 30 working days of application therefor unless unusual circumstances require a longer time for processing the applicati or unless the permit application fails to satisfy the Florida Building Code or the enforcing agency's laws or ordinances.

Permit intent.
Section 105.4.1: A permit issued shall be constructed to be a license to proceed with the work and not as authority to violate, cancel, alter or set aside any of the provisions of the technical codes, nor shall issuance c a permit prevent the building official from thereafter requiring a correction of errors in plans, construction or violations of this code. Every permit issued shall become invalid unless the work authorized by such permit is commenced within six months after its issuance, or if the work authorized by such permit is suspended or abandoned for a period of six months after the time the work is commenced.

If work has commenced.
Section 105.4.1.1: If work has commenced and the permit is revoked, becomes null and void, or expires because of lack of progress or abandonment, a new permit covering the proposed construction shall be obtained before proceeding with the work.

New Permit.
Section 105.4.1.2: If a new permit is not obtained within 180 days from the date the initial permit became nu and void, the building official is authorized to require that any work which has been commenced or completed be removed from the building site. Alternately, a new permit may be issued on application, providing the work in place and required to complete the structure meets all applicable regulations in effect at the time the initial permit became null and void and any regulations which may have become effective between the date of expiration and the date if issuance of the new permit.

Work Shall Be:
Section 105.4.1.3: Work shall be considered to be in active progress when the permit has received an approved inspection within 180 days. This provision shall not be applicable in case of civil commotion or strike or when the building work is halted due directly to judicial injunction, order or similar process.

The Fee:
Section 105.4.1.4: The fee for renewal reissuance and extension of a permit shall be set forth by the administrative authority.

When the application is approved for permitting the applicant will be notified by phone as to the status by the Columbia County Building & Zoning Department.

Location: Project Name:

As required by Florida Statute 553.842 and Florida Administrative Code 9B-72, please provide the information and the product approval number(s) on the building components listed below if they will be utilized on the construction project in which you are applying for a building permit on or after April 1, 2004. We recommend you contact your local product supplier should you not know the product approval number for any of the applicable listed products. More information about statewide product approval can be obtained at www.floridabuilding.org

Category/Subcategory	Manufacturer	Product Description	Approval Number
A. EXTERIOR DOORS			FL 4242-R1
1. Swinging			FL 4668-R1
2. Sliding			
3. Sectional		GADCO	
4. Roll up			
5. Automatic			
6. Other			
B. WINDOWS		Atrium SH 160 Series	FL 6752.4
1. Single hung			FL. 5108
2. Horizontal Slider			FL. 5451
3. Casement			
4. Double Hung			
5. Fixed			FL. 5418
6. Awning			
7. Pass -through		Magnolia Vinyl	FL 10300
8. Projected			
9. Mullion			
10. Wind Breaker			
11 Dual Action			
12. Other			
C. PANEL WALL			
1. Siding		Cement board	FL. 889-R1
2. Soffits			FL 4899
3. EIFS		Vinyl Siding D5	FL 4905
4. Storefronts			
5. Curtain walls			
6. Wall louver			
7. Glass block			
8. Membrane			FL 3820-R1
9. Greenhouse			
10. Other			
D. ROOFING PRODUCTS			
1. Asphalt Shingles			FL 5444-R4
2. Underlayments			FL. 586-R2
3. Roofing Fasteners			FL 1814-R1
4. Non-structural Metal Rf			
5. Built-Up Roofing			FL 4586.3
6. Modified Bitumen			
7. Single Ply Roofing Sys.			
8. Roofing Tiles			
9. Roofing Insulation			
10. Waterproofing			
11. Wood shingles /shakes			
12. Roofing Slate			

COLUMBIA COUNTY BUILDING DEPARTMENT
Received for FILE COPY
Code Compliance
PLANS EXAMINER

ory/Subcategory (cont.)	Manufacturer	Product Description	Approval Number(s)
Liquid Applied Roof Sys			
14. Cements-Adhesives – Coatings			FL 1960-R1
15. Roof Tile Adhesive			
16. Spray Applied Polyurethane Roof			
17. Other			
E. SHUTTERS			
1. Accordion			
2. Bahama			
3. Storm Panels			
4. Colonial			
5. Roll-up			
6. Equipment			
7. Others			
F. SKYLIGHTS			
1. Skylight			FL 451-R1
2. Other			
G. STRUCTURAL COMPONENTS			
1. Wood connector/anchor			FL 474-R1
2. Truss plates			
3. Engineered lumber			FL 1008 R1
4. Railing			
5. Coolers-freezers			
6. Concrete Admixtures			
7. Material			
8. Insulation Forms			
9. Plastics			
10. Deck-Roof			
11. Wall			
12. Sheds			
13. Other			
H. NEW EXTERIOR ENVELOPE PRODUCTS			
1.			
2.			

The products listed below did not demonstrate product approval at plan review. I understand that at the time of inspection of these products, the following information must be available to the inspector on the jobsite; 1) copy of the product approval, 2) the performance characteristics which the product was tested and certified to comply with, 3) copy of the applicable manufacturers installation requirements.

I understand these products may have to be removed if approval cannot be demonstrated during inspection

Gaartz Const.

Contractor or Contractor's Authorized Agent Signature

Print Name

3-26-2013

Date

Location

Permit # (FOR STAFF USE ONLY)

Taylor Model

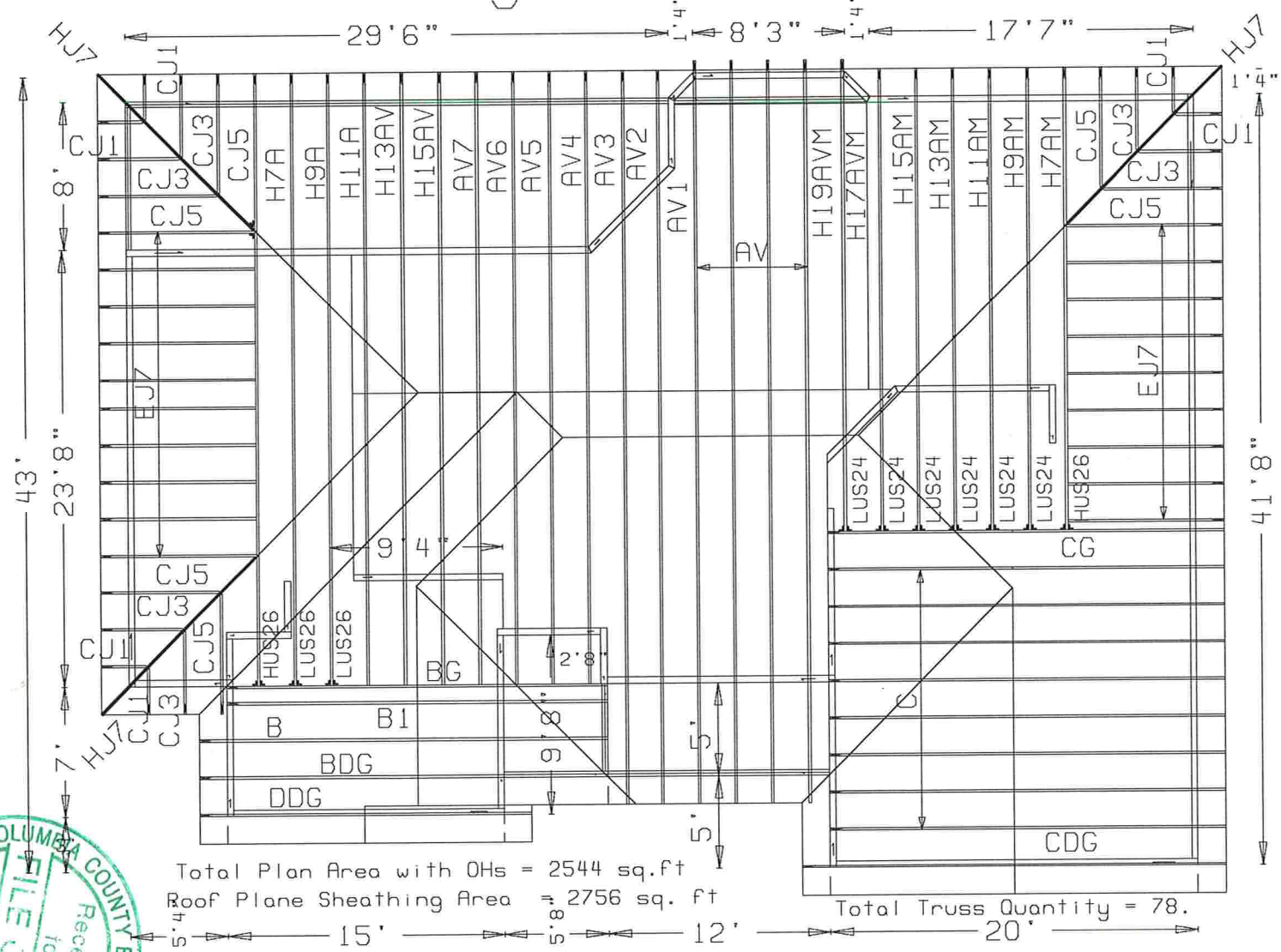

Total Plan Area with OHs = 2544 sq.ft

Roof Plane Sheathing Area = 2756 sq. ft

Total Truss Quantity = 78.

: <Not Found>

Lot 5
JOB DESCRIPTION:: Fill in later
/: Taylor Model
JOB #: 13-046B
DESIGNER: Curt V Burlingame
SALESMAN: Curt V Burlingame
ADDRESS: Mayfair Sub-Div

JOB NO:
13-046B

PAGE NO:
1 OF 1

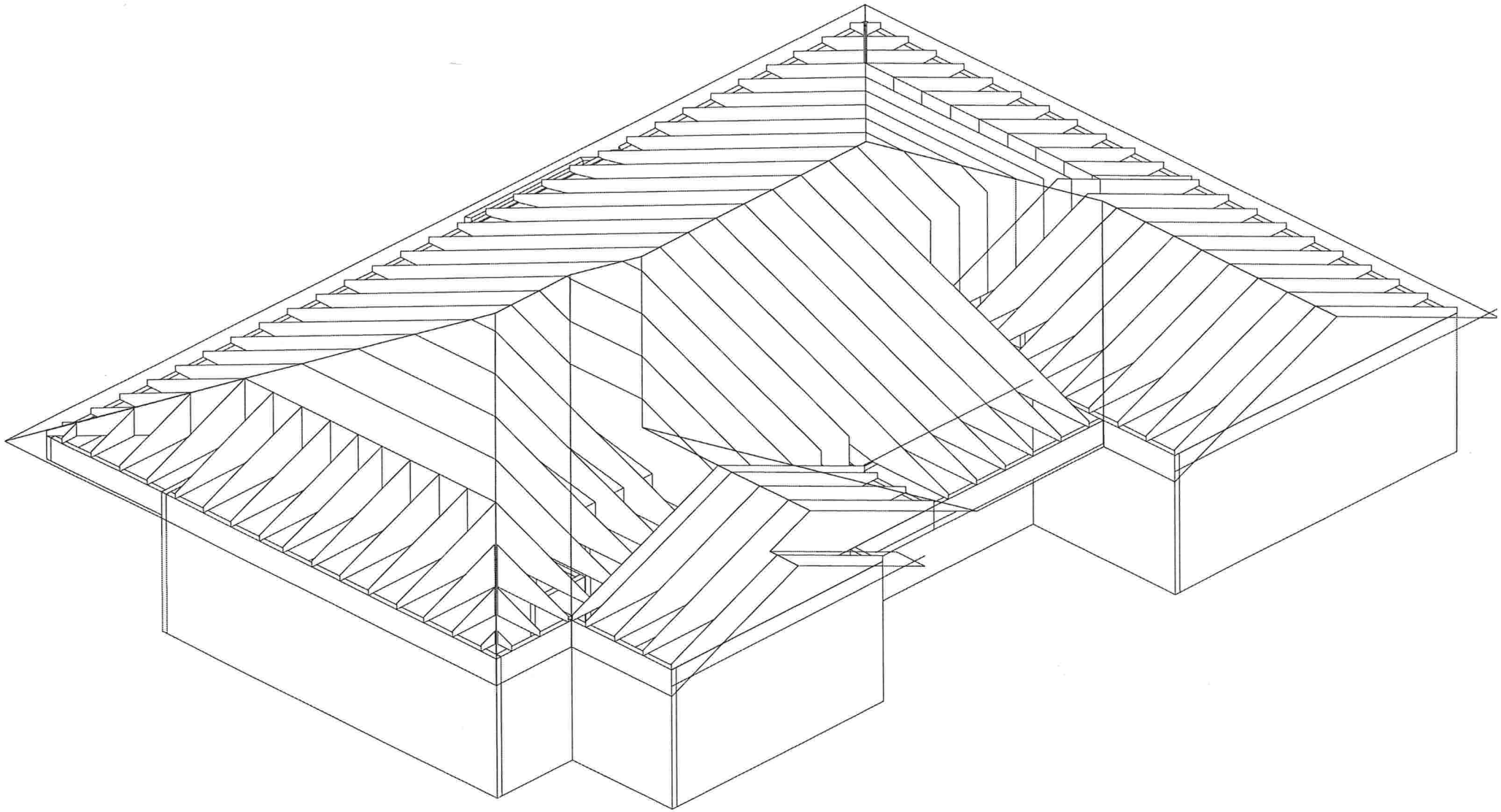

TAYLOR MODEL
HVAC LOAD ANALYSIS

for

MIKE NICKOLSON

Prepared By:

DAVID HALL
DAVID HALL'S INC.
PO BOX 244
LAKE CITY FL 32056
386-755-9792
2/25/13

Miscellaneous Project Data

Project File Name: NICHOLSON, TAYLOR MODEL

System Input Data

---System 1---	Outdoor Dry Bulb	Outdoor Wet Bulb	Indoor Rel.Hum.	Indoor Dry Bulb	Grains Difference
Winter:	27	N/A	N/A	72	N/A
Summer:	98	78	50%	75	48

External Overhangs

No.	Projection	Offset	No.	Projection	Offset
1	3	1	6	0	0
2	5	0	7	0	0
3	4	0.5	8	0	0
4	0	0	9	0	0
5	0	0	10	0	0

Duct Sizing Inputs

	Runouts		Main Trunk	
Duct Material:	Flexible Duct		Galvanized Steel	
Roughness Factor:	0.010000		0.000300	
Pressure Drop:	0.1000	In.wg/100 Ft.	0.1000	In.wg/100 Ft.
Minimum Velocity:	450.0	Ft./Minute	650.0	Ft./Minute
Maximum Velocity:	750.0	Ft./Minute	900.0	Ft./Minute
Minimum Height:	0	Inches	0	Inches
Maximum Height:	0	Inches	0	Inches

Outside Air Data

	Winter		Summer	
Infiltration:	0.900	AC/Hr	0.400	AC/Hr
Volume of Conditioned Space:	X 12723	Cu.Ft.	X 12723	Cu.Ft.
	11,451	Cu.Ft./Hr	5,089	Cu.Ft./Hr
	X 0.0167		X 0.0167	
Total Building Infiltration:	190.845	CFM	84.82	CFM
Total Building Ventilation:	0	CFM	0	CFM

---System 1---

Infiltration & Ventilation Sensible Gain Multiplier:	25.30	= (1.10 X 23.00 Summer Temp. Difference)
Infiltration & Ventilation Latent Gain Multiplier:	32.64	= (0.68 X 48.00 Grains Difference)
Infiltration & Ventilation Sensible Loss Multiplier:	49.50	= (1.10 X 45.00 Winter Temp. Difference)

Total Building Summary Loads

Component Description	Area Quan	Sen. Loss	Lat. Gain	Sen. Gain	Total Gain
3C Window Double Pane Clear Glass Metal Frame	115	3,752	0	5,092	5,092
8O Glass Door Double Clear Glass Metal Frame	42	1,370	0	1,016	1,016
11C Door Metal Polystyrene Core	42	888	0	526	526
12G Wall R-13 + 3/4" ExtPoly Board(R-3.8)	1,171	3,427	0	2,024	2,024
16G Ceiling R-30 Insulation	1,435	2,131	0	2,226	2,226
22A Slab on Grade No Edge Insulation	161	5,867	0	0	0
Subtotals for structure:	2,966	17,435	0	10,884	10,884
Active People:	4	0	920	1,200	2,120
Inactive People:	0	0	0	0	0
Appliances:	0	0	1,700	1,700	3,400
Lighting:	0	0		5,115	
Ductwork:	0	1,343	0	2,104	2,104
Infiltration: Winter CFM: 190.8, Summer CFM: 84.8	199	9,446	2,769	2,147	4,916
Ventilation: Winter CFM: 0.0, Summer CFM: 0.0	0	0	0	0	0
Sensible Gain Total:				23,150	
Temperature Swing Multiplier:				X1.00	
Building Load Totals:		28,224	5,389	23,150	28,539

Check Figures

Total Building Supply CFM: 1052
Square feet of room area: 1,435
CFM per square foot: 0.733
Square feet per ton: 572.76

Building Loads

Total heating required with outside air:	28,224	Btuh	28.224	MBH
Total sensible gain:	23,150	Btuh	81	%
Total latent gain:	5,389	Btuh	19	%
Total cooling required with outside air:	28,539	Btuh	2.378	Tons (based on sensible + latent)
			2.505	Tons (based on 77% sensible capacity)

Notes

Calculations are based on 7th edition of ACCA Manual J.
All computed results are estimates as building use and weather may vary.
Be sure to select a unit that meets both sensible and latent loads.

System #1 Summary Loads

Component Description	Area Quan	Sen. Loss	Lat. Gain	Sen. Gain	Total Gain
3C Window Double Pane Clear Glass Metal Frame	115	3,752	0	5,092	5,092
8O Glass Door Double Clear Glass Metal Frame	42	1,370	0	1,016	1,016
11C Door Metal Polystyrene Core	42	888	0	526	526
12G Wall R-13 + 3/4" ExtPoly Board(R-3.8)	1,171	3,427	0	2,024	2,024
16G Ceiling R-30 Insulation	1,435	2,131	0	2,226	2,226
22A Slab on Grade No Edge Insulation	161	5,867	0	0	0
Subtotals for structure:	2,966	17,435	0	10,884	10,884
Active People:	4	0	920	1,200	2,120
Inactive People:	0	0	0	0	0
Appliances:	0	0	1,700	1,700	3,400
Lighting:	0	0		5,115	
Ductwork:	0	1,343	0	2,104	2,104
Infiltration: Winter CFM: 190.8, Summer CFM: 84.8	199	9,446	2,769	2,147	4,916
Ventilation: Winter CFM: 0.0, Summer CFM: 0.0	0	0	0	0	0
Sensible Gain Total:				23,150	
Temperature Swing Multiplier:				X1.00	
System Load Totals:		28,224	5,389	23,150	28,539

Check Figures

Supply CFM:	1,052	CFM per square foot:	0.733
Square feet of room area:	1,435	Square feet per ton:	572.76

System Loads

Total heating required with outside air:	28,224	Btuh	28.224	MBH
Total sensible gain:	23,150	Btuh	81	%
Total latent gain:	5,389	Btuh	19	%
Total cooling required with outside air:	28,539	Btuh	2.378	Tons (based on sensible + latent)
			2.505	Tons (based on 77% sensible capacity)

Notes

Calculations are based on 7th edition of ACCA Manual J.
All computed results are estimates as building use and weather may vary.
Be sure to select a unit that meets both sensible and latent loads.

Room Load Summary Reports

System #1 Room Load Summary

No	Room Name	Area SF	Htg Sens Btuh	Htg Nom CFM	Run Duct Size	Run Duct Vel	Clg Sens Btuh	Clg Lat Btuh	Clg Nom CFM	Zone Adj Fact	Clg Adj CFM	Air Sys CFM
	---Zone 1---											
1	Master Bedroom	197	2,286	30	1-5	593	1,779	439	81	1.00	81	81
2	Master Bath	78	1,304	17	1-4	607	1,165	0	53	1.00	53	53
3	Master Closet	47	946	12	1-3	615	664	0	30	1.00	30	30
4	Kitchen/ Breakfast	204	5,294	69	1-9	478	4,644	2,140	211	1.00	211	211
5	Dining Room	124	2,653	34	1-6	607	2,259	278	103	1.16	119	103
6	Great Room	279	5,802	75	1-8	561	4,311	1,440	196	1.00	196	196
7	Foyer	21	1,679	22	1-4	500	960	292	44	1.00	44	44
8	Bedroom#2	198	3,439	45	1-8	470	2,889	278	131	1.25	164	131
9	Bath #2	97	1,584	21	1-4	683	1,312	83	60	1.00	60	60
10	Bedroom#3	176	3,177	41	1-8	451	2,768	439	126	1.25	157	126
11	Hall	14	60	1	1-3	369	399	0	18	1.00	18	18
System 1 Totals		1435	28,224	367			23,150	5,389	1,052		1,133	1,052

Main Trunk Size: 16x12 in.

System #1 Cooling System Summary

	Cooling Tons	Sensible/Latent Split	Sensible Btuh	Latent Btuh	Total Btuh
Net Required:	2.378	81%/19%	23,150	5,389	28,539
Recommended:	2.505	77%/23%	23,150	6,915	30,065

SUBCONTRACTOR VERIFICATION FORM

APPLICATION NUMBER 1303-46 CONTRACTOR [illegible] PHONE 941-755-9661

THIS FORM MUST BE SUBMITTED PRIOR TO THE ISSUANCE OF A PERMIT

In Columbia County one permit will cover all trades doing work at the permitted site. It is REQUIRED that we have records of the subcontractors who actually did the trade specific work under the permit. Per Florida Statute 440 and Ordinance 89-6, a contractor shall require all subcontractors to provide evidence of workers' compensation or exemption, general liability insurance and a valid Certificate of Competency license in Columbia County.

Any changes, the permitted contractor is responsible for the corrected form being submitted to this office prior to the start of that subcontractor beginning any work. Violations will result in stop work orders and/or fines.

ELECTRICAL 716	Print Name Marcus Matthews License #: ER-0014352	Signature [illegible] Phone #: 386-344-2029	ok
MECHANICAL/ A/C b 568	Print Name David Hall License #: CACO 57427	Signature [illegible] Phone #: 386-755-9792	ok
PLUMBING/ GAS 715	Print Name Cody Bass License #: CFC1427145	Signature [illegible] Phone #: 386 623-[illegible]	ok
ROOFING 534	Print Name DANIEL Summerlin License #: CCC1326192	Signature [illegible] Phone #: [illegible]	ok
SHEET METAL	Print Name License #:	Signature Phone #:	
FIRE SYSTEM/ SPRINKLER	Print Name N/A License#:	Signature Phone #:	
SOLAR	Print Name License #:	Signature Phone #:	

Specialty License	License Number	Sub-Contractors Printed Name	Sub-Contractors Signature	
OK MASON	CC.000287	WILLIE DIXON	[illegible]	
ok CONCRETE FINISHER	000063	Darrell Spradley	[illegible]	
ok FRAMING 602	CRC022354	William GUERNSEY	[illegible]	
ok INSULATION	000240	Will Sikes	[illegible]	
STUCCO	N/A			
ok DRYWALL	CC001177	DRYWALL WIZZARD	Joseph V. Camero	
PLASTER	N/A			
CABINET INSTALLER	~~CC.000319~~	~~[illegible]~~ John Cady	[illegible]	Spute Shee
ok PAINTING	330	Bobby Tomlin Painting	[illegible]	
ACOUSTICAL CEILING	N/A			
GLASS	N/A			
ok CERAMIC TILE	0 1263	Carpet One Brown Vann		On Signature Sheet
ok FLOOR COVERING	0 710	" " " "		
ok ALUM/VINYL SIDING	CC.000166	Mike's Aluminum of LC	[illegible]	
ok GARAGE DOOR	0000 99	Dallas Miller	[illegible]	ok to sign
METAL BLDG ERECTOR	N/A			

F. S. 440.103 Building permits; identification of minimum premium policy.--Every employer shall, as a condition to applying for and receiving a building permit, show proof and certify to the permit issuer that it has secured compensation for its employees under this chapter as provided in ss. 440.10 and 440.38, and shall be presented each time the employer applies for a building permit.

Spoke to Mike 3-20-13

2/25/2013 10:58 AM

SUBCONTRACTOR VERIFICATION FORM

APPLICATION NUMBER 1303-46 CONTRACTOR Geartz/ PHONE 623-2376

THIS FORM MUST BE SUBMITTED PRIOR TO THE ISSUANCE OF A PERMIT

In Columbia County one permit will cover all trades doing work at the permitted site. It is REQUIRED that we have records of the subcontractors who actually did the trade specific work under the permit. Per Florida Statute 440 and Ordinance 89-6, a contractor shall require all subcontractors to provide evidence of workers' compensation or exemption, general liability insurance and a valid Certificate of Competency license in Columbia County.

Any changes, the permitted contractor is responsible for the corrected form being submitted to this office prior to the start of that subcontractor beginning any work. Violations will result in stop work orders and/or fines.

ELECTRICAL	Print Name____ Signature____ License #: Phone #:
MECHANICAL/ A/C ____	Print Name____ Signature____ License #: Phone #:
PLUMBING/ GAS	Print Name____ Signature____ License #: Phone #:
ROOFING	Print Name____ Signature____ License #: Phone #:
SHEET METAL	Print Name____ Signature____ License #: Phone #:
FIRE SYSTEM/ SPRINKLER	Print Name____ Signature____ License#: Phone #:
SOLAR	Print Name____ Signature____ License #: Phone #:

Specialty License	License Number	Sub-Contractors Printed Name	Sub-Contractors Signature
MASON			
CONCRETE FINISHER			
FRAMING			
INSULATION			
STUCCO			
DRYWALL			
PLASTER			
ok CABINET INSTALLER	215	James Rix RIX CONSTRUCTION SVC. INC	
PAINTING			
ACOUSTICAL CEILING			
GLASS			
ok CERAMIC TILE	1263	Marc Vann	Marc Vann
ok FLOOR COVERING	710	Marc Vann	Marc Vann
ALUM/VINYL SIDING			
GARAGE DOOR			
METAL BLDG ERECTOR			

RECEIVED 4-2-12

F. S. 440.103 Building permits; identification of minimum premium policy.--Every employer shall, as a condition to applying for and receiving a building permit, show proof and certify to the permit issuer that it has secured compensation for its employees under this chapter as provided in ss. 440.10 and 440.38, and shall be presented each time the employer applies for a building permit.

Britt Surveying and Mapping, LLC
2086 SW Main Blvd Ste 112 • Lake City, FL 32025
386-752-7163 P • 386-752-5573 F • www.brittsurvey.com

OK
BLK
25 Apr 2013

4/10/2013

L-22555

Re: Lot 5 of May-Fair Unit 3 – Permit #30893

To: Mike Nicholson

To Whom It May Concern:

The elevation of the stem wall on Lot 5 is found to be 165.48 feet. The Columbia County Building Permit reflects a minimum floor elevation of 164.00 feet. The elevation of the lowest adjacent grade is 163.70 feet. The elevation of the highest adjacent grade is 164.30 feet. All elevations shown hereon are NGVD 29 datum.

Sincerely,

L. Scott Britt
LS 5757

COLUMBIA COUNTY 9-1-1 ADDRESSING

P. O. Box 1787, Lake City, FL 32056-1787
PHONE: (386) 758-1125 * FAX: (386) 758-1365 * Email: ron_croft@columbiacountyfla.com

Addressing Maintenance

To maintain the Countywide Addressing Policy you must make application for a 9-1-1 Address at the time you apply for a building permit. The established standards for assigning and posting numbers to all principal buildings, dwellings, businesses and industries are contained in Columbia County Ordinance 2001-9. The addressing system is to enable Emergency Service Agencies to locate you in an emergency, and to assist the United States Postal Service and the public in the timely and efficient provision of services to residents and businesses of Columbia County.

DATE REQUESTED: 3/19/2013 **DATE ISSUED:** 3/19/2013

ENHANCED 9-1-1 ADDRESS:

189 SW VANN CT

LAKE CITY FL 32024

PROPERTY APPRAISER PARCEL NUMBER:

11-4S-16-02911-305

Remarks:

RE-ISSUE OF EXISTING ADDRESS FOR NEW STRUCTURE ON PARCEL.

Address Issued By: SIGNED:/ RONAL N. CROFT

Columbia County 9-1-1 Addressing / GIS Department

NOTICE: THIS ADDRESS WAS ISSUED BASED ON LOCATION INFORMATION RECEIVED FROM THE REQUESTER. SHOULD, AT A LATER DATE, THE LOCATION INFORMATION BE FOUND TO BE IN ERROR, THIS ADDRESS IS SUBJECT TO CHANGE.

2487

Mike Nicholson

This Instrument Prepared By:
Abstract Trust Title, LLC
PO Box 7175
Lake City, FL 32055

ATS# 4-5520

Inst:201312003322 Date:3/5/2013 Time:4:06 PM
Doc Stamp-Deed:104.30
DC,P.DeWitt Cason,Columbia County Page 1 of 1 B:1250 P:1583

GENERAL WARRANTY DEED

Limited Liability Company to Individual

THIS WARRANTY DEED made this 5th day of March, 2013, Pleasants, Chase and Giebeig, LLC, A Florida Limited Liability Company, hereinafter called the grantor, to Kent W. Geartz, as Trustee of the Kent W. Geartz Revocable Living Trust whose post office address is: 5610 33rd Street E, Bradenton, FL 34203 hereinafter called the grantee:

(Wherever used herein the terms "grantor" and "grantee" include all the parties to this instrument and the heirs, legal representatives and assigns of individuals, and the successors and assigns of corporation)

WITNESSETH that the Grantor, for and in consideration of the sum of $10.00 and other valuable considerations, receipt whereof is hereby acknowledged, hereby grants, bargains, sells, aliens, remises, releases, conveys, and confirms unto the Grantee, all that certain land situate in COLUMBIA County, Florida, viz: Parcel ID# R02911-305

LOT 5, MAYFAIR, UNIT 3, A SUBDIVISION ACCORDING TO THE PLAT THEREOF FILED IN PLAT BOOK 8, PAGES 84-85 OF THE PUBLIC RECORDS OF COLUMBIA COUNTY, FLORIDA.

TOGETHER with all tenements, hereditaments and appurtenances thereto belonging or in anywise appertaining.

TO HAVE AND TO HOLD, the same in fee simple forever.

AND the Grantor hereby covenants with said Grantee that the Grantor is lawfully seized of said land in fee simple; that the Grantor has good right and lawful authority to sell and convey said land; that the Grantor hereby fully warrants the title to said land and will defend the same against the lawful claims of all persons whomsoever; and that said land is free of all encumbrances, except taxes accruing subsequent to December 31, 2012.

IN WITNESS WHEREOF, the said grantor has signed and sealed these presents the day and year first above written.

Signed, sealed and delivered in our presence:

Traci Landry
WITNESS

Traci Landry
PRINTED NAME

WITNESS

Michael H. Harrell
PRINTED NAME

Pleasants, Chase and Giebeig, LLC

BY: Peter W. Giebeig Jr. Managing Member
Peter W. Giebeig, Jr., Managing Member

STATE OF FLORIDA

COUNTY OF COLUMBIA

The foregoing instrument was acknowledged before me this 5th day of March, 2013 by Peter W. Giebeig, Jr. as Managing Member of Pleasants, Chase and Giebeig, LLC personally known to me or, if not personally known to me, who produced DL for identification and who did not take an oath.

(SEAL)

NOTARY PUBLIC

My Commission Expires:

MICHAEL H. HARRELL
Notary Public, State of Florida
My Comm. Expires April 8, 2013
Commission No. DD 869555

CR # 10-5621
PERMIT NO. 13-0126
DATE PAID: 3/8/13
FEE PAID: 310.00
RECEIPT #: 1100168

STATE OF FLORIDA
DEPARTMENT OF HEALTH
ONSITE SEWAGE TREATMENT AND DISPOSAL SYSTEM
APPLICATION FOR CONSTRUCTION PERMIT

APPLICATION FOR:
[X] New System [ ] Existing System [ ] Holding Tank [ ] Innovative
[ ] Repair [ ] Abandonment [ ] Temporary [ ]

APPLICANT: GERTZ CONSTRUCTION ~~Pleasant, Gertz, + Gibbs LLC~~

AGENT: PAUL LLOYD TELEPHONE: (386) 352-9403

MAILING ADDRESS: 141 SW HUMMING BIRG GLENN LAKE CITY FL 32024

TO BE COMPLETED BY APPLICANT OR APPLICANT'S AUTHORIZED AGENT. SYSTEMS MUST BE CONSTRUCTED BY A PERSON LICENSED PURSUANT TO 489.105(3)(m) OR 489.552, FLORIDA STATUTES. IT IS THE APPLICANT'S RESPONSIBILITY TO PROVIDE DOCUMENTATION OF THE DATE THE LOT WAS CREATED OR PLATTED (MM/DD/YY) IF REQUESTING CONSIDERATION OF STATUTORY GRANDFATHER PROVISIONS.

PROPERTY INFORMATION

LOT: 5 BLOCK: N/A SUBDIVISION: MAY FAIR UNIT 3 PLATTED: 93

PROPERTY ID #: 11-4S-16-02911-305 ZONING: RES I/M OR EQUIVALENT: [NO]

PROPERTY SIZE: 0.510 ACRES WATER SUPPLY: [X] PRIVATE PUBLIC [ ]<=2000GPD [ ]>2000GPD

IS SEWER AVAILABLE AS PER 381.0065, FS? [NO] DISTANCE TO SEWER: N/A FT

PROPERTY ADDRESS: 189 VANN CT.

DIRECTIONS TO PROPERTY: 90 WEST TURN LEFT ON CR 247, TURN RIGHT ON MAY FAIR LANE TURN RIGHT ON VANN CT. LOT ON RIGHT.

BUILDING INFORMATION [X] RESIDENTIAL [ ] COMMERCIAL

Unit No.	Type of Establishment	No. of Bedrooms	Building Area Sqft	Commercial/Institutional System Design Table 1, Chapter 64E-6, FAC
1	HOUSE	3	1,435	Held for
2				legal, rec'd 3.15.13.
3				
4				

[ ] Floor/Equipment Drains [ ] Other (Specify)

SIGNATURE: Paul Lloyd DATE: 3/8/13

DH 4015, 08/09 (Obsoletes previous editions which may not be used)
Incorporated 64E-6.001, FAC

ation for Onsite Sewage Disposal System
truction Permit. Part II Site Plan
rmit Application Number: 13-0126

ALL CHANGES MUST BE APPROVED BY THE COUNTY HEALTH UNIT

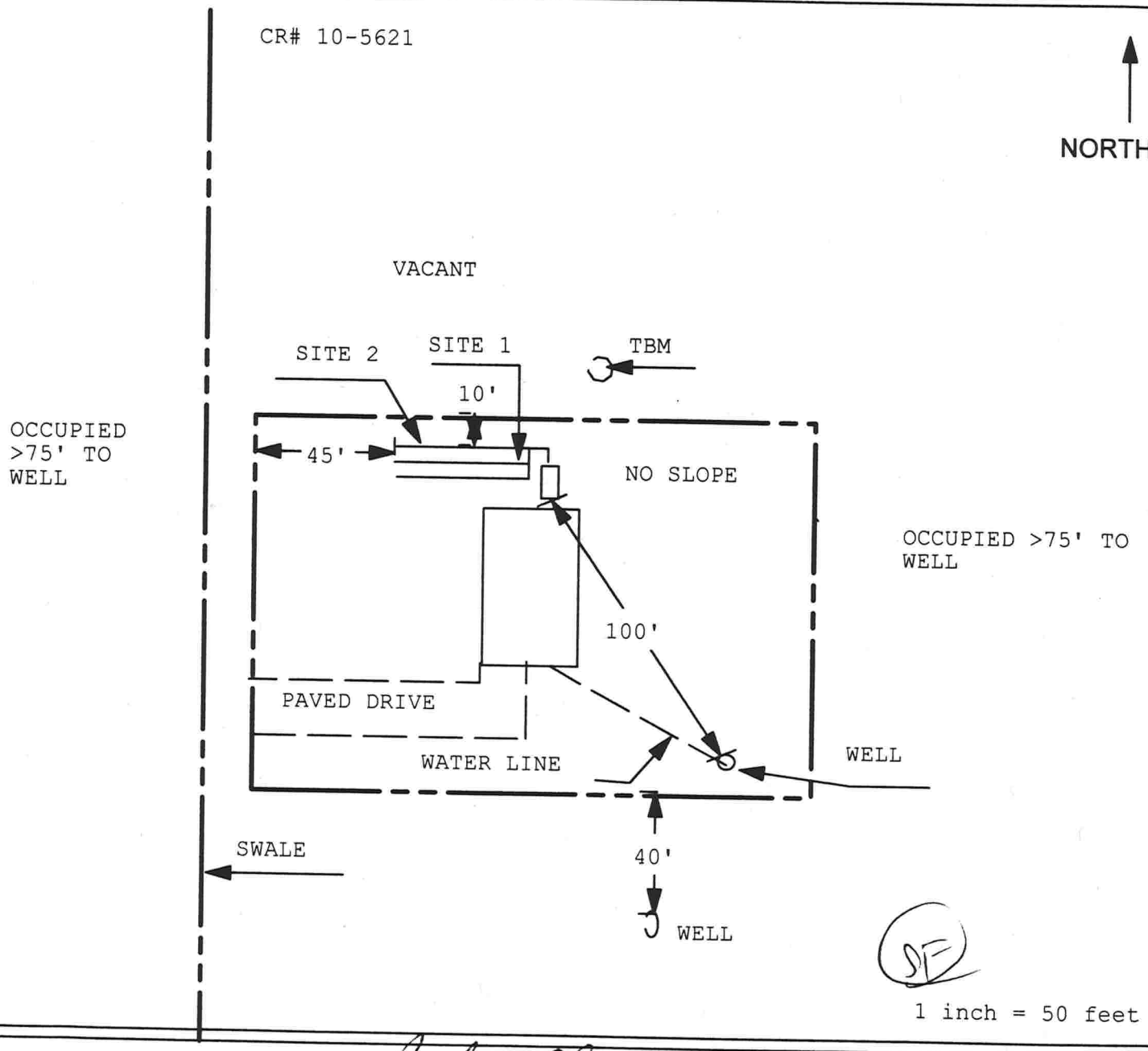

Site Plan Submitted By Paul Riggs Date 3/7/13

Plan Approved ✓ Not Approved ___ Date 3/19/13

By [signature] Columbia CHD CPHU

Notes:

LYNCH WELL DRILLING, INC.

173 SW Tustenuggee Ave
Lake City, FL. 32025
Phone 386-752-6677
Fax 386-752-1477

Building Permit # 1303-46 Owner's Name Mike Nicholson Hearty Construction

Well Depth _____ Ft. Casing Depth _____ Ft. Water Level _____ Ft.

Casing Size 4 inch Steel Pump Installation: Deep Well Submersible

Pump Make Schaefer Pump Model 20SV1554 HP 1 1/2

System Pressure (PSI) _____ On 30 Off 50 Average Pressure 50

Pumping System GPM at average pressure and pumping level 20 (GPM)

Tank Installation: Bladder/Galvanized Make OSI
Model DSV86 Size 86

Tank Draw-down per cycle at system pressure 27.1 gallons

I HEREBY VERTIFY THAT THIS WATER WELL SYSTEM HAS BEEN INSTALLED AS PER THE ABOVE INFORMATION.

Linda Newcomb
Signature

Linda Newcomb
Print Name

2609
License Number

3/21/2013
Date

BOUNDARY SURVEY IN SECTION 11 , TOWNSHIP 4 SOUTH, RANGE 16 EAST, COLUMBIA COUNTY, FLORIDA.

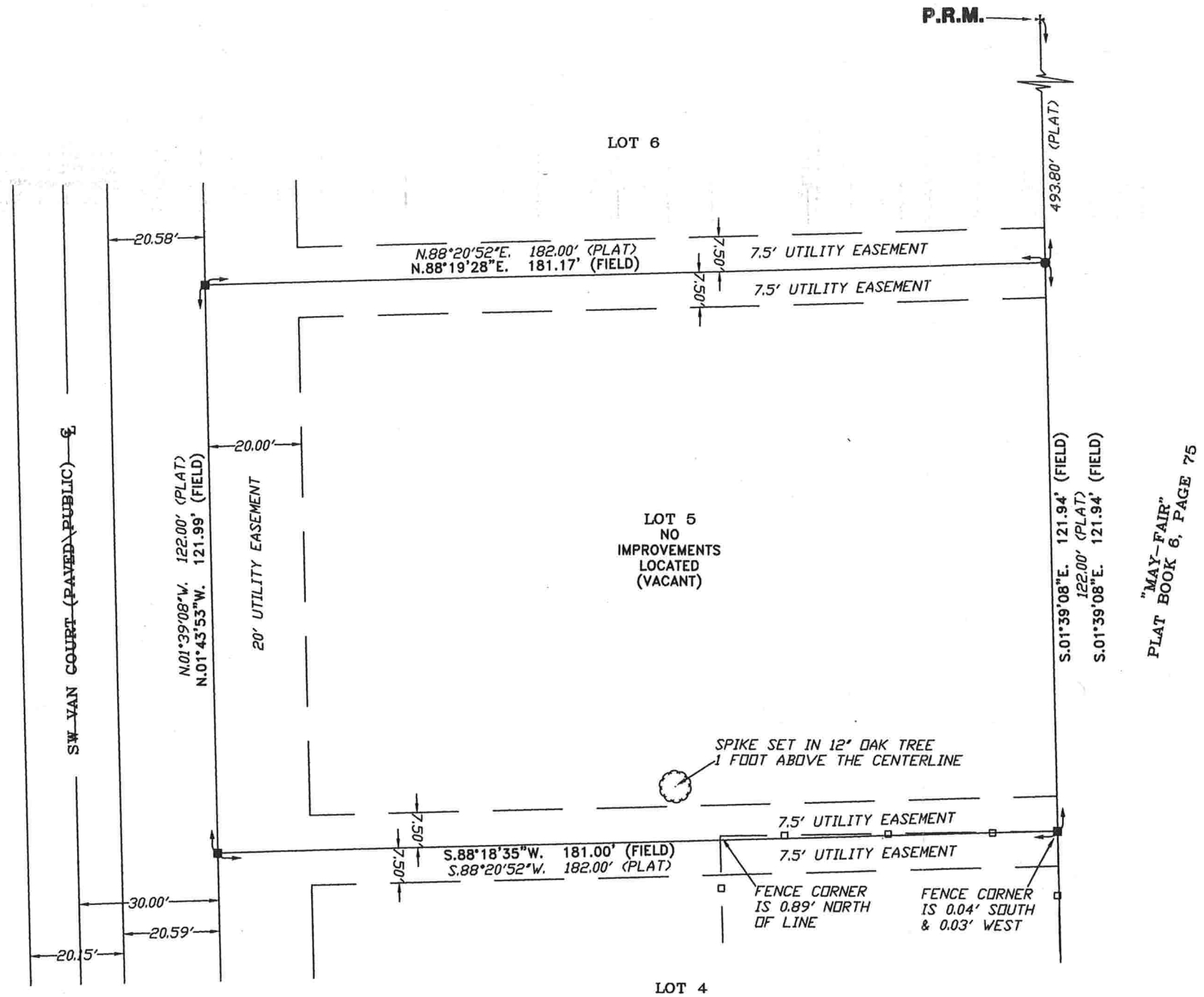

NOTE: ALL PROPERTY CORNERS LOCATED WERE IDENTIFIED AS L.S. BRITT, P.L.S. 5757.

N

SCALE: 1" = 30'

0 7 15 30 60

GRAPHIC SCALE

SYMBOL LEGEND:

■	4"X4" CONCRETE MONUMENT FOUND
□	4"X4" CONCRETE MONUMENT SET
●	IRON PIPE FOUND
○	IRON PIN AND CAP SET
×	"X" CUT IN PAVEMENT
+	CALCULATED PROPERTY CORNER
⊙	NAIL & DISK
⊕	POWER POLE
+	SIGN POST
▲	WATER METER
⊙	UTILITY BOX
✱	WELL
Ⓐ	SANITARY MANHOLE
℄	CENTERLINE
—·—	SECTION LINE
—E—	ELECTRIC LINES
—×—	WIRE FENCE
—○—	CHAIN LINK FENCE
—□—	WOODEN FENCE
(PLAT)	AS PER A PLAT OF RECORD
(DEED)	AS PER A DEED OF RECORD
(CALC.)	AS PER CALCULATIONS
(FIELD)	AS PER FIELD MEASUREMENTS
P.R.M.	PERMANENT REFERENCE MARKER
P.C.P.	PERMANENT CONTROL POINT

DESCRIPTION:
LOT 5 OF "MAY-FAIR UNIT 3" AS PER THE PLAT THEREOF RECORDED IN PLAT BOOK 8, PAGE(S) 84 & 85, OF THE PUBLIC RECORDS OF COLUMBIA COUNTY, FLORIDA.

SURVEYOR'S NOTES:

1. BOUNDARY BASED ON MONUMENTATION FOUND IN ACCORDANCE WITH THE RETRACEMENT OF THE ORIGINAL SURVEY FOR SAID PLAT OF RECORD.
2. BEARINGS ARE BASED ON SAID PLAT OF RECORD AND THE BEARING BASIS AS SHOWN HEREON.
3. IT IS APPARENT THAT THIS PARCEL IS IN ZONE "X" AND IS DETERMINED TO BE OUTSIDE THE 500 YEAR FLOOD PLAIN AS PER FLOOD RATE MAP, DATED 4 FEBRUARY, 2009 FIRM PANEL NUMBER 12023C0290C. HOWEVER, THE FLOOD INSURANCE RATE MAPS ARE SUBJECT TO CHANGE.
4. THE IMPROVEMENTS, IF ANY, INDICATED ON THIS SURVEY DRAWING ARE AS LOCATED ON DATE OF FIELD SURVEY AS SHOWN HEREON.
5. IF THEY EXIST, NO UNDERGROUND ENCROACHMENTS AND/OR UTILITIES WERE LOCATED FOR THIS SURVEY EXCEPT AS SHOWN HEREON.
6. THIS SURVEY WAS COMPLETED WITHOUT THE BENEFIT OF A TITLE COMMITMENT OR A TITLE POLICY.
7. DIMENSIONS SHOWN HEREON ARE IN FEET AND DECIMAL PARTS THEREOF.
8. THIS SURVEY DOES NOT REFLECT OR DETERMINE OWNERSHIP.
9. THE ADJACENT OWNERSHIP INFORMATION AS SHOWN HEREON IS BASED ON THE COUNTY PROPERTY APPRAISERS GIS SYSTEM, UNLESS OTHERWISE DENOTED.

CERTIFIED TO:

MIKE NICHOLSON

FIELD BOOK: 334 PAGE(S): 59

SURVEYOR'S CERTIFICATION:

I HEREBY CERTIFY THAT THIS SURVEY WAS MADE UNDER MY RESPONSIBLE CHARGE AND MEETS THE MINIMUM TECHNICAL STANDARDS AS SET FORTH BY THE FLORIDA BOARD OF PROFESSIONAL SURVEYORS AND MAPPERS IN CHAPTER 5J-17, FLORIDA ADMINISTRATIVE CODE, PURSUANT TO SECTION 472.027, FLORIDA STATUTES.

02/26/13 FIELD SURVEY DATE

02/27/13 DRAWING DATE

L. SCOTT BRITT, P.S.M.
CERTIFICATION # 5757

NOTE: UNLESS IT BEARS THE SIGNATURE AND THE ORIGINAL RAISED SEAL OF A FLORIDA LICENSED SURVEYOR AND MAPPER THIS DRAWING, SKETCH, PLAT OR MAP IS FOR INFORMATIONAL PURPOSES ONLY AND IS NOT VALID.

BRITT SURVEYING & MAPPING, LLC

LAND SURVEYORS AND MAPPERS, L.B. # 7593

2086 SW MAIN BLVD, SUITE. 112, LAKE CITY, FLORIDA 32025

(386)752-7163 FAX (386)752-5573

www.brittsurvey.com

WORK ORDER # L-22499

BOUNDARY SURVEY IN SECTION 11 , TOWNSHIP 4 SOUTH, RANGE 16 EAST, COLUMBIA COUNTY, FLORIDA.

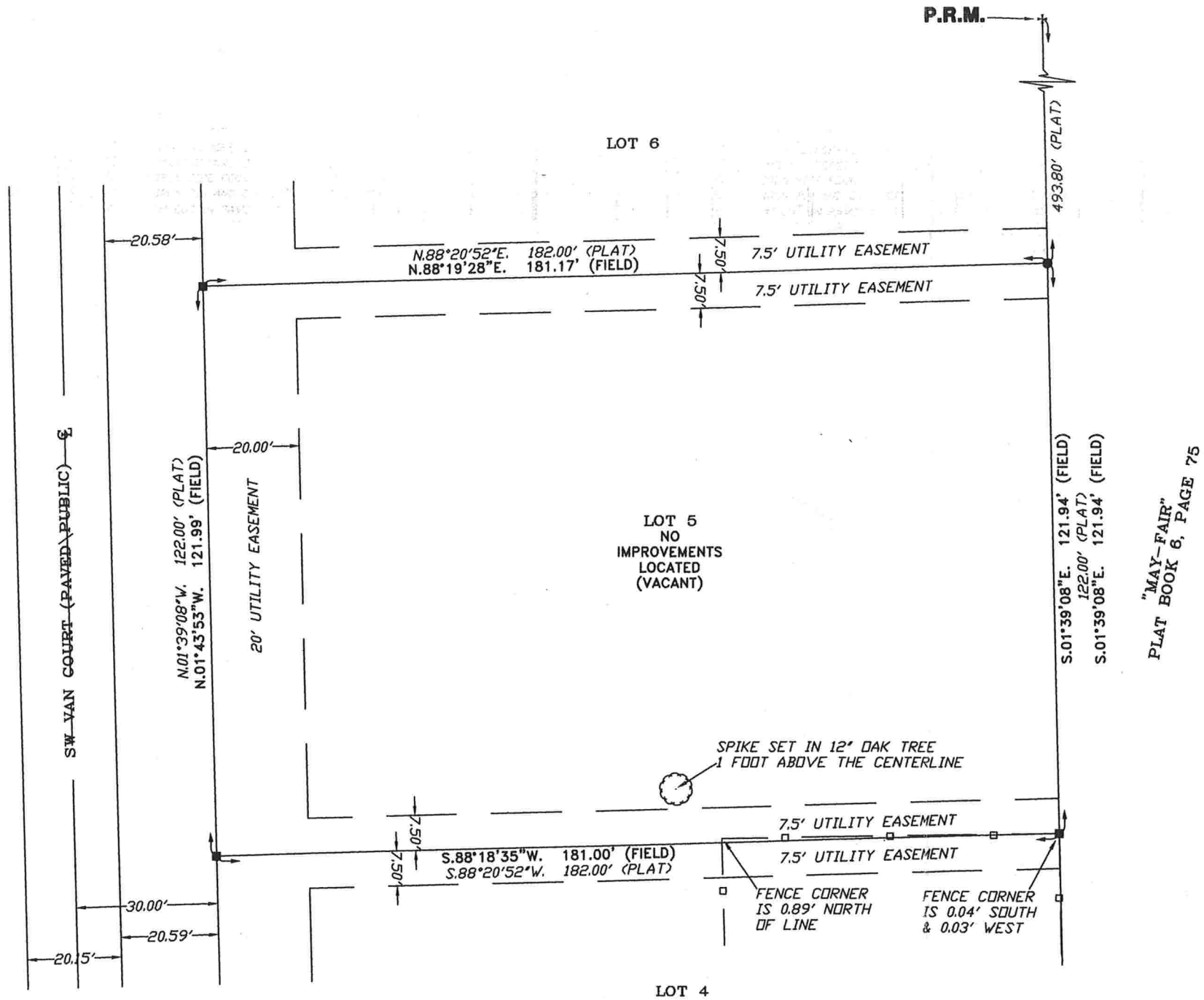

NOTE: ALL PROPERTY CORNERS LOCATED WERE IDENTIFIED AS L.S. BRITT, P.L.S. 5757.

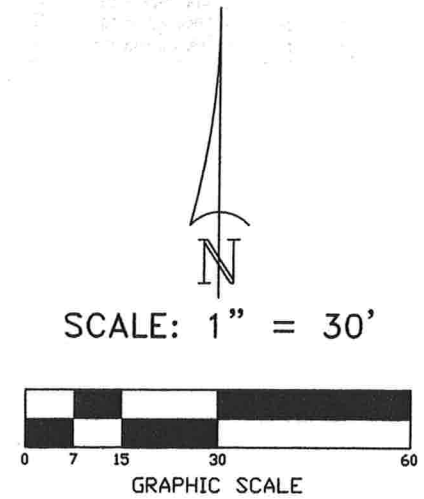

SYMBOL LEGEND:

■	4"X4" CONCRETE MONUMENT FOUND
□	4"X4" CONCRETE MONUMENT SET
●	IRON PIPE FOUND
○	IRON PIN AND CAP SET
×	"X" CUT IN PAVEMENT
+	CALCULATED PROPERTY CORNER
⊙	NAIL & DISK
⊕	POWER POLE
+	SIGN POST
▲	WATER METER
⊙	UTILITY BOX
✳	WELL
Ⓐ	SANITARY MANHOLE
℄	CENTERLINE
—·—	SECTION LINE
—E—	ELECTRIC LINES
—X—	WIRE FENCE
—○—	CHAIN LINK FENCE
—□—	WOODEN FENCE
(PLAT)	AS PER A PLAT OF RECORD
(DEED)	AS PER A DEED OF RECORD
(CALC.)	AS PER CALCULATIONS
(FIELD)	AS PER FIELD MEASUREMENTS
P.R.M.	PERMANENT REFERENCE MARKER
P.C.P.	PERMANENT CONTROL POINT

DESCRIPTION:
LOT 5 OF "MAY-FAIR UNIT 3" AS PER THE PLAT THEREOF RECORDED IN PLAT BOOK 8, PAGE(S) 84 & 85, OF THE PUBLIC RECORDS OF COLUMBIA COUNTY, FLORIDA.

SURVEYOR'S NOTES:
1. BOUNDARY BASED ON MONUMENTATION FOUND IN ACCORDANCE WITH THE RETRACEMENT OF THE ORIGINAL SURVEY FOR SAID PLAT OF RECORD.
2. BEARINGS ARE BASED ON SAID PLAT OF RECORD AND THE BEARING BASIS AS SHOWN HEREON.
3. IT IS APPARENT THAT THIS PARCEL IS IN ZONE "X" AND IS DETERMINED TO BE OUTSIDE THE 500 YEAR FLOOD PLAIN AS PER FLOOD RATE MAP, DATED 4 FEBRUARY, 2009 FIRM PANEL NUMBER 12023C0290C. HOWEVER, THE FLOOD INSURANCE RATE MAPS ARE SUBJECT TO CHANGE.
4. THE IMPROVEMENTS, IF ANY, INDICATED ON THIS SURVEY DRAWING ARE AS LOCATED ON DATE OF FIELD SURVEY AS SHOWN HEREON.
5. IF THEY EXIST, NO UNDERGROUND ENCROACHMENTS AND/OR UTILITIES WERE LOCATED FOR THIS SURVEY EXCEPT AS SHOWN HEREON.
6. THIS SURVEY WAS COMPLETED WITHOUT THE BENEFIT OF A TITLE COMMITMENT OR A TITLE POLICY.
7. DIMENSIONS SHOWN HEREON ARE IN FEET AND DECIMAL PARTS THEREOF.
8. THIS SURVEY DOES NOT REFLECT OR DETERMINE OWNERSHIP.
9. THE ADJACENT OWNERSHIP INFORMATION AS SHOWN HEREON IS BASED ON THE COUNTY PROPERTY APPRAISERS GIS SYSTEM, UNLESS OTHERWISE DENOTED.

CERTIFIED TO:

MIKE NICHOLSON

FIELD BOOK: 334 PAGE(S): 59

SURVEYOR'S CERTIFICATION:

I HEREBY CERTIFY THAT THIS SURVEY WAS MADE UNDER MY RESPONSIBLE CHARGE AND MEETS THE MINIMUM TECHNICAL STANDARDS AS SET FORTH BY THE FLORIDA BOARD OF PROFESSIONAL SURVEYORS AND MAPPERS IN CHAPTER 5J-17, FLORIDA ADMINISTRATIVE CODE, PURSUANT TO SECTION 472.027, FLORIDA STATUTES.

02/26/13 — FIELD SURVEY DATE
02/27/13 — DRAWING DATE
L. SCOTT BRITT, P.S.M. CERTIFICATION # 5757

NOTE: UNLESS IT BEARS THE SIGNATURE AND THE ORIGINAL RAISED SEAL OF A FLORIDA LICENSED SURVEYOR AND MAPPER THIS DRAWING, SKETCH, PLAT OR MAP IS FOR INFORMATIONAL PURPOSES ONLY AND IS NOT VALID.

BRITT SURVEYING & MAPPING, LLC
LAND SURVEYORS AND MAPPERS, L.B. # 7593
2086 SW MAIN BLVD, SUITE. 112, LAKE CITY, FLORIDA 32025
(386)752-7163 FAX (386)752-5573
www.brittsurvey.com

WORK ORDER # L-22499

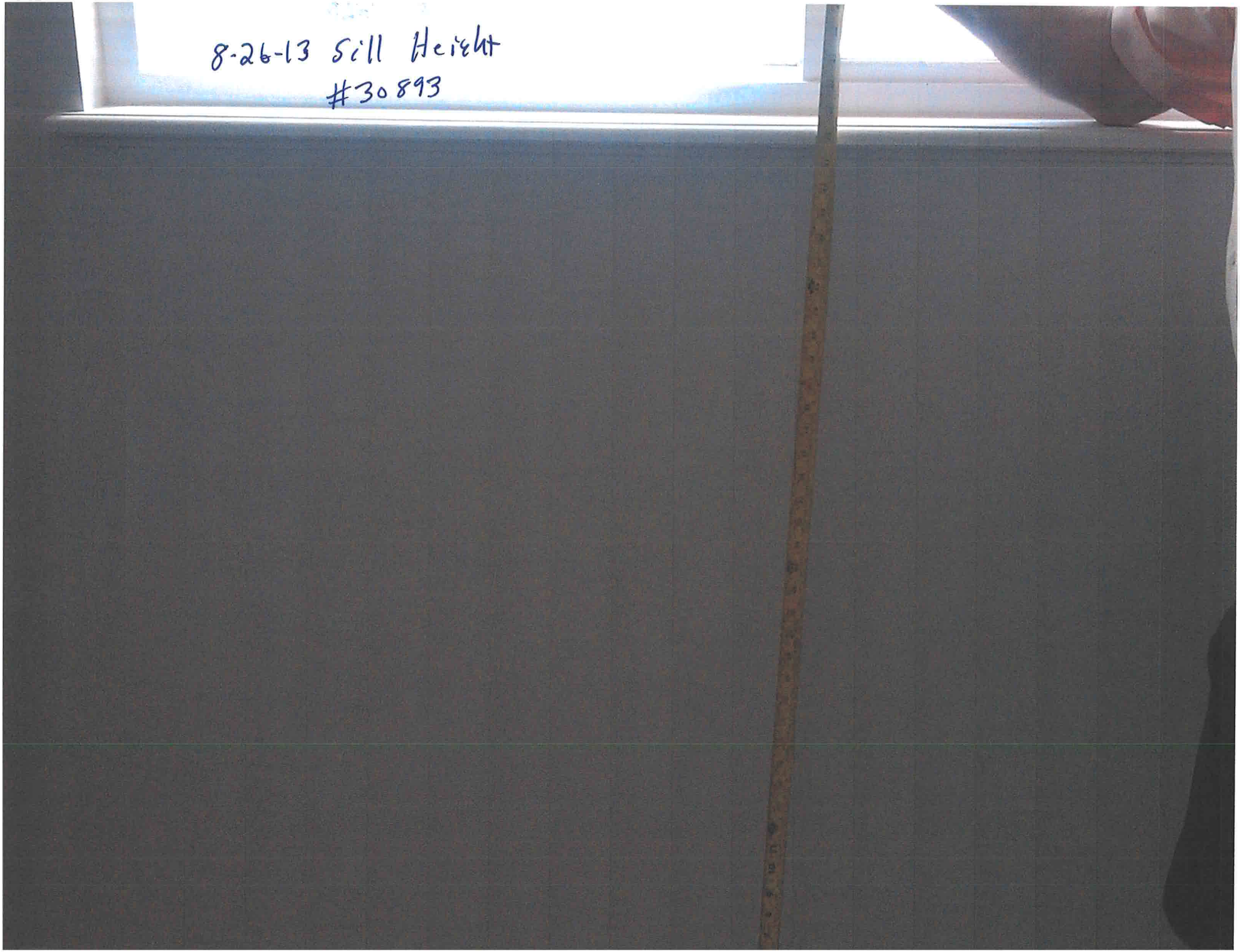
8-26-13 Sill Height
#30893

Ck# 1003.

Columbia County Building Permit Application ☑ Product Approval Sheets

For Office Use Only Application # 1303-46 Date Received 3/20/13 By LH Permit # 20001 - 20893

Zoning Official BLK Date 28 March 2013 Flood Zone X Land Use Res. Low Dens Zoning RSF-2

FEMA Map # N/A Elevation N/A MFE 164.0' (Constr. Plans) River N/A Plans Examiner J.C. Date 3-27-13

Comments Elevation Confirmation Letter at Slab

☑ NOC ☑ EH ☑ Deed or PA ☑ Site Plan ☑ State Road Info ☑ Well letter ☑ 911 Sheet ☐ Parent Parcel # ☑ Vann Signature

☐ Dev Permit # ☐ In Floodway ☑ Letter of Auth. from Contractor (on file) ☑ W Comp. letter ☑ 287-Dixon ☑ 1177-Ambrose

IMPACT FEES: EMS Fire Corr ☑ Sub VF Form ☑ Need Cabinet Installer

Road/Code School = TOTAL (Suspended) ☑ Ellisville Water ☑ App Fee Paid

Septic Permit No. 13-0126 Fax 386-752-9403

Name Authorized Person Signing Permit Michael R. Nicholson Phone 386-623-2376

Address 141 SW. Hummingbird Gln. Lake City, FL. 32024

Owners Name Kent W. Geartz (Trustee) Phone 386-623-2376

911 Address 189 SW Vann Ct. Lake City fl 32024

Contractors Name Kent W Geartz Phone 941.755.9661

Address 5610 33rd Street, Bradenton, FL. 34203

Fee Simple Owner Name & Address

Bonding Co. Name & Address None

Architect/Engineer Name & Address Tim Delbene/Mark Disosway Lake City, FL.

Mortgage Lenders Name & Address None

Circle the correct power company – FL Power & Light – (Clay Elec.) – Suwannee Valley Elec. – Progress Energy

Property ID Number 11-4S-16-02911-305 Estimated Cost of Construction 100,000.00

Subdivision Name Mayfair Sub. Divs. Lot 5 Block Unit Phase 3

Driving Directions Hwy 247 South., Mayfair Sub. Divs. (R) go to Straight to Vann Ct. turn (R) 4th Lot on (R) Not counting Corner.

Number of Existing Dwellings on Property 0

Construction of SFD, utility Total Acreage 0.51 Lot Size ½ Acre

Do you need a - (Culvert Permit) or Culvert Waiver or Have an Existing Drive Total Building Height 16'

Actual Distance of Structure from Property Lines - Front 35 Side 32 Side 32 Rear 100

Number of Stories 1 Heated Floor Area 1435 Total Floor Area 2244 Roof Pitch 5/12

Application is hereby made to obtain a permit to do work and installations as indicated. I certify that no work or installation has commenced prior to the issuance of a permit and that all work be performed to meet the standards of all laws regulating construction in this jurisdiction. **CODE:** Florida Building Code 2010 and the 2008 National Electrical Code.

Spoke to Michael 3/28/13

Columbia County Building Permit Application

TIME LIMITATIONS OF APPLICATION : An application for a permit for any proposed work shall be deemed to have been abandoned 180 days after the date of filing, unless such application has been pursued in good faith or a permit has been issued; except that the building official is authorized to grant one or more extensions of time for additional periods not exceeding 90 days each. The extension shall be requested in writing and justifiable cause demonstrated.

TIME LIMITATIONS OF PERMITS: Every permit issued shall become invalid unless the work authorized by such permit is commenced within 180 days after its issuance, or if the work authorized by such permit is suspended or abandoned for a period of 180 days after the time work is commenced. A valid permit receives an approved inspection every 180 days. Work shall be considered not suspended, abandoned or invalid when the permit has received an approved inspection within 180 days of the previous approved inspection.

FLORIDA'S CONSTRUCTION LIEN LAW: Protect Yourself and Your Investment: According to Florida Law, those who work on your property or provide materials, and are not paid-in-full, have a right to enforce their claim for payment against your property. This claim is known as a construction lien. If your contractor fails to pay subcontractors or material suppliers or neglects to make other legally required payments, the people who are owed money may look to your property for payment, even if you have paid your contractor in full.
This means if a lien is filed against your property, it could be sold against your will to pay for labor, materials or other services which your contractor may have failed to pay.

NOTICE OF RESPONSIBILITY TO BUILDING PERMITEE: ***YOU ARE HEREBY NOTIFIED*** as the recipient of a building permit from Columbia County, Florida, you will be held responsible to the County for any damage to sidewalks and/or road curbs and gutters, concrete features and structures, together with damage to drainage facilities, removal of sod, major changes to lot grades that result in ponding of water, or other damage to roadway and other public infrastructure facilities caused by you or your contractor, subcontractors, agents or representatives in the construction and/or improvement of the building and lot for which this permit is issued. No certificate of occupancy will be issued until all corrective work to these public infrastructures and facilities has been corrected.

WARNING TO OWNER: YOUR FAILURE TO RECORD A NOTICE OF COMMENCMENT MAY RESULT IN YOU PAYING TWICE FOR IMPROVEMENTS TO YOUR PROPERTY. A NOTICE OF COMMENCEMENT MUST BE RECORDED AND POSTED ON THE JOB SITE BEFORE THE FIRST INSPECTION. IF YOU INTEND TO OBTAIN FINANCING, CONSULT WITH YOUR LENDER OR ATTORNEY BEFORE RECORDING YOUR NOTICE OF COMMENCEMENT.

OWNERS CERTIFICATION: I CERTIFY THAT ALL THE FOREGOING INFORMATION IS ACCURATE AND THAT ALL WORK WILL BE DONE IN COMPLIANCE WITH ALL APPLICABLE LAWS REGULATING CONSTRUCTION AND ZONING.

NOTICE TO OWNER: There are some properties that may have deed restrictions recorded upon them. These restrictions may limit or prohibit the work applied for in your building permit. You must verify if your property is encumbered by any restrictions or face possible litigation and or fines.

(Owners Must Sign All Applications Before Permit Issuance.)

X _____
Owners Signature ****OWNER BUILDERS MUST PERSONALLY APPEAR AND SIGN THE BUILDING PERMIT.**

CONTRACTORS AFFIDAVIT: By my signature I understand and agree that I have informed and provided this written statement to the owner of all the above written responsibilities in Columbia County for obtaining this Building Permit including all application and permit time limitations.

X _____
Contractor's Signature (Permitee)

Contractor's License Number CBC057552
Columbia County Competency Card Number 1376

Affirmed under penalty of perjury to by the Contractor and subscribed before me this 19 **day of** March **20**13

Personally known X **or Produced Identification** _____

Niki C. Hackney
State of Florida Notary Signature (For the Contractor)

SEAL:

NOTARY PUBLIC
STATE OF FLORIDA
NIKI C. HACKNEY
Comm. # EE 129754
Comm. Exp. Sep. 26, 2015

Niki C. Hackney

30893

NOTICE OF COMMENCEMENT

Clerk's Office Stamp

Inst:201312004936 Date:4/2/2013 Time:2:02 PM
DC,P.DeWitt Cason,Columbia County Page 1 of 1 B:1252 P:539

Tax Parcel Identification Number:

11-4S-16-02911-305

THE UNDERSIGNED hereby gives notice that improvements will be made to certain real property, and in accordance with Section 713.13 of the Florida Statutes, the following information is provided in this **NOTICE OF COMMENCEMENT.**

1. Description of property *(legal description)*: Lot 5 Mayfair Unit 3 Plat Book 8 Pgs 84-85
   a) Street *(job)* Address: 189 Vann Ct.
2. General description of improvements: New Home
3. Owner Information
   a) Name and address: Kent W. Geartz 5610 33rd St East Bradenton, Fl. 34203
   b) Name and address of fee simple titleholder (if other than owner) _____
   c) Interest in property _____
4. Contractor Information
   a) Name and address: Geartz Construction
   b) Telephone No.: 386-623-2376 Fax No. (Opt.) _____
5. Surety Information
   a) Name and address: _____
   b) Amount of Bond: _____
   c) Telephone No.: _____ Fax No. (Opt.) _____
6. Lender
   a) Name and address: _____
   b) Phone No. _____
7. Identity of person within the State of Florida designated by owner upon whom notices or other documents may be served:
   a) Name and address: Michael R. Nicholson 141 SW. Hummingbird Gln. Lake City, Fl. 32024
   b) Telephone No.: 386-623-2376 Fax No. (Opt.) _____
8. In addition to himself, owner designates the following person to receive a copy of the Lienor's Notice as provided in Section 713.13(l)(b), Florida Statutes:
   a) Name and address: _____
   b) Telephone No.: _____ Fax No. (Opt.) _____
9. Expiration date of Notice of Commencement **(the expiration date is one year from the date of recording unless a different date is specified)**: _____

WARNING TO OWNER: ANY PAYMENTS MADE BY THE OWNER AFTER THE EXPIRATION OF THE NOTICE OF COMMENCEMENT ARE CONSIDERED IMPROPER PAYMENTS UNDER CHAPTER 713, PART I, SECTION 713.13, FLORIDA STATUTES, AND CAN RESULT IN YOUR PAYING TWICE FOR IMPROVEMENTS TO YOUR PROPERTY; A NOTICE OF COMMENCEMENT MUST BE RECORDED AND POSTED ON THE JOB SITE BEFORE THE FIRST INSPECTION. IF YOU INTEND TO OBTAIN FINANCING, CONSULT YOUR LENDER OR AN ATTORNEY BEFORE COMMENCING WORK OR RECORDING YOUR NOTICE OF COMMENCEMENT.

STATE OF FLORIDA
COUNTY OF COLUMBIA

10. _____
Signature of Owner or Owner's Authorized Office/Director/Partner/Manager

KENT GEARTZ
Printed Name

The foregoing instrument was acknowledged before me, a Florida Notary, this 19 day of MARCH, 20 13, by:

KENT GEARTZ as PRES. (type of authority, e.g. officer, trustee, attorney fact) for KG INDUSTRIES, INC. (name of party on behalf of whom instrument was executed).

Personally Known X OR Produced Identification ____ Type _____

Notary Signature _____ Notary Stamp or Seal:
Niki C. Hackney

NOTARY PUBLIC
STATE OF FLORIDA
NIKI C. HACKNEY
Comm. # EE 129754
Comm. Exp. Sep. 26, 2015

~~AND~~

11. Verification pursuant to Section 92.525, Florida Statutes. Under penalties of perjury, I declare that I have read the foregoing and that the facts stated in it are true to the best of my knowledge and belief.

_____
Signature of Natural Person Signing (in line #10 above.)

Chapter 3, Section R310, (2)(1)

R310.2.1 **Ladder and steps.**
Window wells with a vertical depth greater than 44 inches (1118 mm) shall be equipped with a permanently affixed ladder or steps usable with the window in the fully open position. Ladders or steps required by this section shall not be required to comply with Sections R311.7 and R311.8. Ladders or rungs shall have an inside width of at least 12 inches (305 mm), shall project at least 3 inches (76 mm) from the wall and shall be spaced not more than 18 inches (457 mm) on center vertically for the full height of the window well.

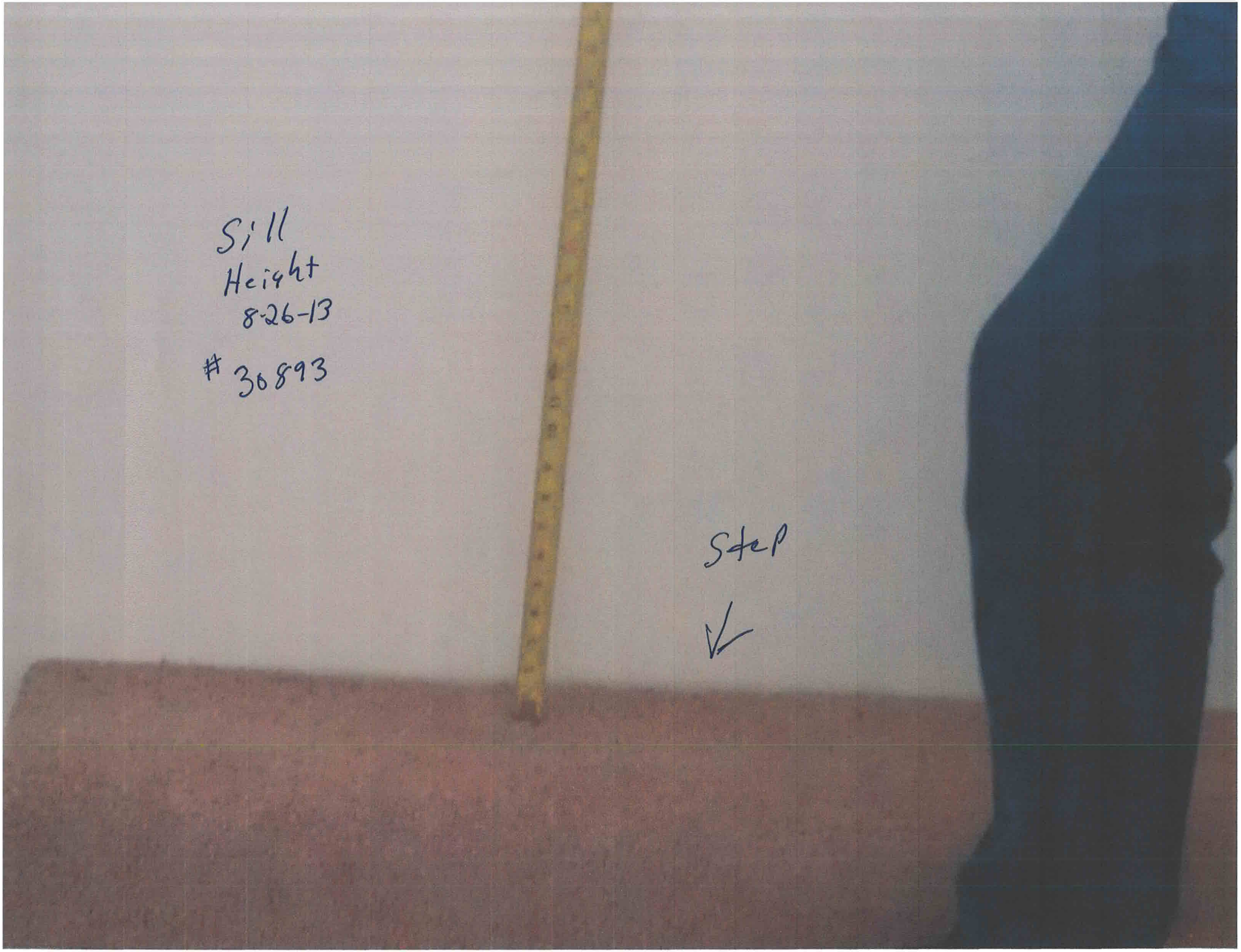
Sill
Height
8-26-13
30893
Step

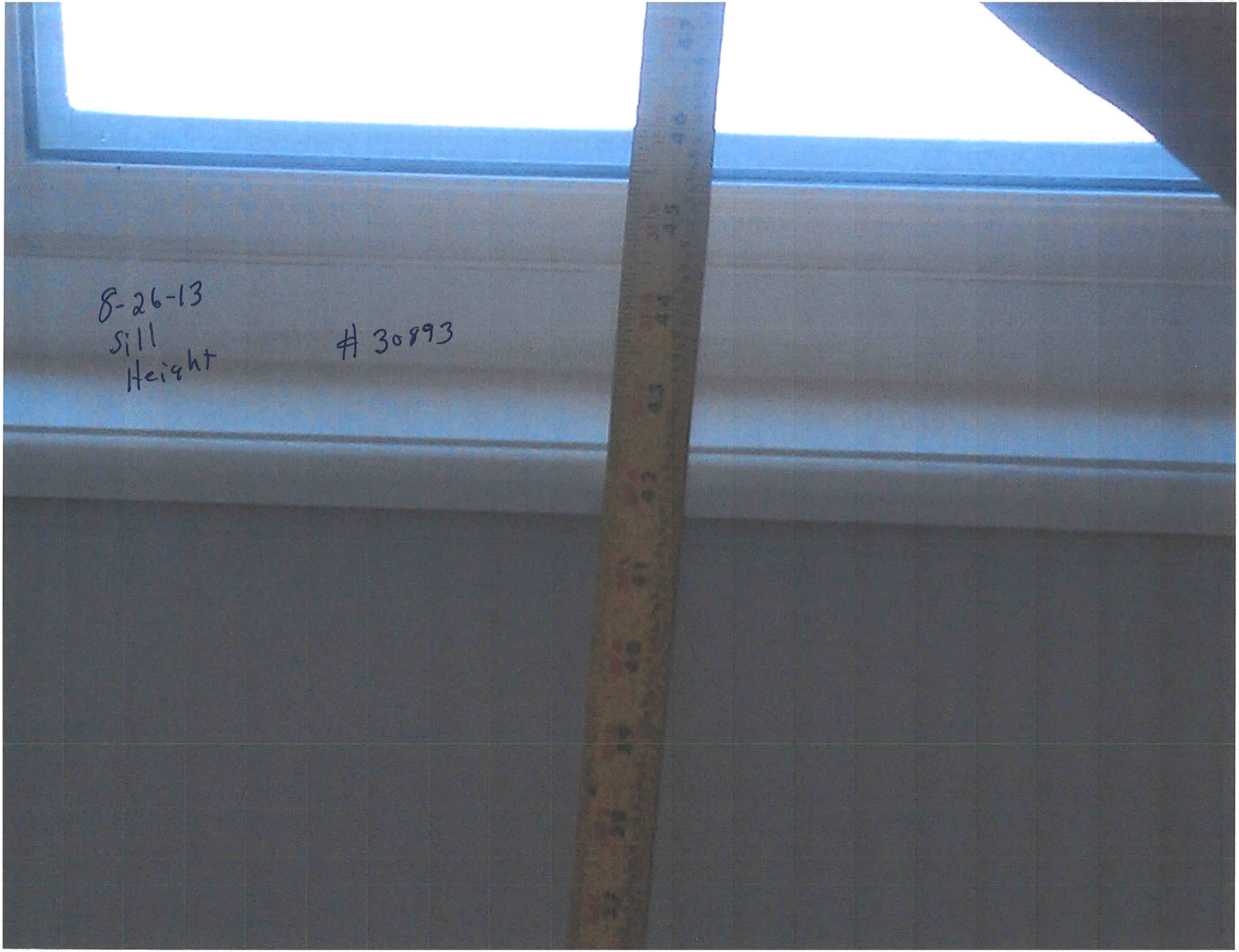
8-26-13
Sill
Height
30893

ITW Building Components Group, Inc.

1950 Marley Drive Haines City, FL 33844
Florida Engineering Certificate of Authorization Number: 0 278
Florida Certificate of Product Approval # FL1999
 Document ID:1UUK487-Z0118082921

WILLIAM H. KRICK
LICENSE
No. 70861
STATE OF FLORIDA
PROFESSIONAL ENGINEER
03/18/2013

Truss Fabricator:	Anderson Truss Company
Job Identification:	13-046B--Fill in later Taylor Model -- Mayfair Sub-Div
Truss Count:	33
Model Code:	Florida Building Code 2010
Truss Criteria:	FBC2010Res/TPI-2007(STD)
Engineering Software:	Alpine Software,Version 10.03.
Structural Engineer of Record:	The identity of the structural EOR did not exist as of
Address:	the seal date per section 61G15-31.003(5a) of the FAC
Minimum Design Loads:	Roof - 37.0 PSF @ 1.25 Duration
	Floor - N/A
	Wind - 120 MPH ASCE 7-10 -Closed

Notes:

1. Determination as to the suitability of these truss components for the structure is the responsibility of the building designer/engineer of record, as defined in ANSI/TPI 1
2. The drawing date shown on this index sheet must match the date shown on the individual truss component drawing.
3. As shown on attached drawings; the drawing number is preceded by: HCUSR487

William H. Krick
-Truss Design Engineer-

1950 Marley Drive
Haines City, FL 33844

Details: BRCLBSUB-12015EC1-GBLLETIN-GABRST10-CNNAILSP-

#	Ref	Description	Drawing#	Date
1	85755--AV	36'8" Common	13077001	03/18/13
2	85756-AV1	36'8" Common	13077002	03/18/13
3	85757-AV2	36'8" Common	13077003	03/18/13
4	85758-AV3	31'8" Common	13077004	03/18/13
5	85759-AV4	31'8" Common	13077005	03/18/13
6	85760-AV5	31'8" Common	13077006	03/18/13
7	85761-AV6	31'8" Common	13077007	03/18/13
8	85762-AV7	31'8" Common	13077008	03/18/13
9	85763--B	20'8" Common	13077009	03/18/13
10	85764--B1	20'8" Common	13077010	03/18/13
11	85765--BDG	20'8" Gable	13077011	03/18/13
12	85766-BG	20'8" Common	13077012	03/18/13
13	85767--C	20' Common	13077013	03/18/13
14	85768--CDG	20' Gable	13077014	03/18/13
15	85769-CG	20' Common Gi	13077015	03/18/13
16	85770--CJ1	1' Jack	13077016	03/18/13
17	85771--CJ3	3' Jack	13077017	03/18/13
18	85772--CJ5	5' Jack	13077018	03/18/13
19	85773--DDG	15' Gable	13077019	03/18/13
20	85774--EJ7	7' End Jack	13077020	03/18/13
21	85775-H11A	31'8" Stepd	13077021	03/18/13
22	85776-H11AM	23'6"8 Ste	13077022	03/18/13
23	85777-H13AM	23'6"8 Ste	13077023	03/18/13
24	85778-H13AV	31'8" Step	13077024	03/18/13
25	85779-H15AM	23'6"8 Ste	13077025	03/18/13
26	85780-H15AV	31'8" Step	13077026	03/18/13
27	85781-H17AVM	23'6"8 Co	13077027	03/18/13
28	85782-H19AVM	23'6"8 Co	13077028	03/18/13
29	85783-H7A	31'8" Stepdo	13077029	03/18/13
30	85784-H7AM	23'6"8 Step	13077030	03/18/13
31	85785-H9A	31'8" Stepdo	13077031	03/18/13
32	85786-H9AM	23'6"8 Step	13077032	03/18/13
33	85787-HJ7	9'10"13 Hip	13077033	03/18/13

COLUMBIA COUNTY BUILDING DEPARTMENT
Received for FILE COPY
Code Compliance
PLANS EXAMINER

THIS DWG PREPARED FROM COMPUTER INPUT (LOADS & DIMENSIONS) SUBMITTED BY TRUSS MFR.

(13-046B--Fill in later Taylor Model -- Mayfair Sub-Div - AV 36'8" Common)

Top chord 2x4 SP_#1_12A
Bot chord 2x4 SP_#1_12A
Webs 2x4 SP_#3__12A :W8 2x4 SP_#1_12A:

Lumber grades designated with "12A" use design values approved 1/5/2012 by ALSC.

Calculated horizontal deflection is 0.12" due to live load and 0.19" due to dead load.

(a) Continuous lateral bracing equally spaced on member.

Deflection meets L/240 live and L/180 total load. Creep increase factor for dead load is 1.50.

Negative reaction(s) of -727# MAX. (See below) from a non-wind load case requires uplift connection.

120 mph wind, 15.00 ft mean hgt, ASCE 7-10, CLOSED bldg, not located within 9.00 ft from roof edge, RISK CAT II, EXP C, wind TC DL=3.5 psf, wind BC DL=5.0 psf. GCpi(+/-)=0.18

Wind loads and reactions based on MWFRS with additional C&C member design.

Bottom chord checked for 10.00 psf non-concurrent live load.

Shim all supports to solid bearing.

MWFRS loads based on trusses located at least 15.00 ft. from roof edge.

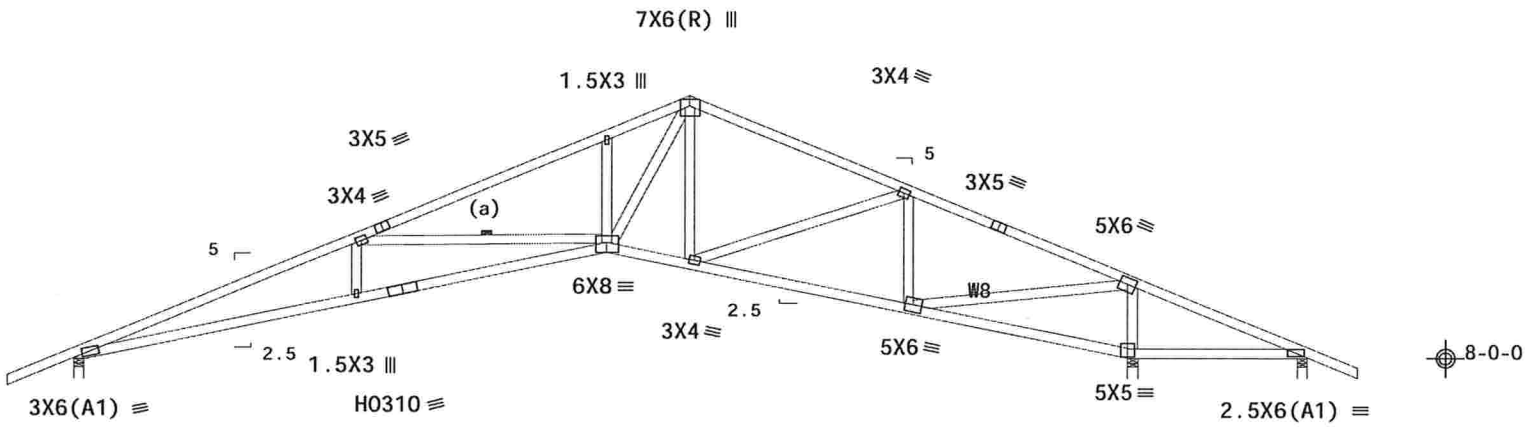

R=1171 U=55 W=3.5"
RL=187/-189

R=2351 U=29 W=4"
R=-728 Rw=95 U=398 W=3.5"

Design Crit: FBC2010Res/TPI-2007(STD)

PLT TYP. 20 Gauge HS,Wave FT/RT=20%(0%)/10(0) 10.03.11.0209.20 QTY:4 FL/-/4/-/-/R/- Scale =.1875"/Ft.

WILLIAM H. KRICK LICENSED No. 70861 STATE OF FLORIDA PROFESSIONAL ENGINEER

03/18/2013

ALPINE
ITW Building Components Group Inc.
Haines City, FL 33844
FL COA #0 278

WARNING READ AND FOLLOW ALL NOTES ON THIS SHEET!
IMPORTANT FURNISH THIS DESIGN TO ALL CONTRACTORS INCLUDING INSTALLERS.

Trusses require extreme care in fabricating, handling, shipping, installing and bracing. Refer to and follow the latest edition of BCSI (Building Component Safety Information, by TPI and WTCA) for safety practices prior to performing these functions. Installers shall provide temporary bracing per BCSI. Unless noted otherwise, top chord shall have properly attached structural sheathing and bottom chord shall have a properly attached rigid ceiling. Locations shown for permanent lateral restraint of web shall have bracing installed per BCSI sections B3, B7 or B10, as applicable.

ITW Building Components Group Inc. (ITWBCG) shall not be responsible for any deviation from this design, any failure to build the truss in conformance with ANSI/TPI 1, or for handling, shipping, installation and bracing of trusses. Apply plates to each face of truss and position as shown above and on the Joint Details, unless noted otherwise. Refer to drawings 160A-Z for standard plate positions. A seal on this drawing or cover page listing this drawing, indicates acceptance of professional engineering responsibility solely for the design shown. The suitability and use of this design for any structure is the responsibility of the Building Designer per ANSI/TPI 1 Sec.2. For more information see: This job's general notes page; ITW-BCG: www.itwbcg.com; TPI: www.tpinst.org; WTCA: www.sbcindustry.com; ICC: www.iccsafe.org

TC LL	20.0 PSF	REF	R487-- 85755
TC DL	7.0 PSF	DATE	03/18/13
BC DL	10.0 PSF	DRW	HCUSR487 13077001
BC LL	0.0 PSF	HC-ENG	WHK/WHK
TOT.LD.	37.0 PSF	SEQN-	69044
DUR.FAC.	1.25		
SPACING	24.0"	JREF-	1UUK487_Z01

THIS DWG PREPARED FROM COMPUTER INPUT (LOADS & DIMENSIONS) SUBMITTED BY TRUSS MFR.

(13-046B--Fill in later Taylor Model -- Mayfair Sub-Div - AV1 36'8" Common)

Top chord 2x4 SP_#1_12A
Bot chord 2x4 SP_#1_12A
Webs 2x4 SP_#3__12A

Lumber grades designated with "12A" use design values approved 1/5/2012 by ALSC.

Bottom chord checked for 10.00 psf non-concurrent live load.

Deflection meets L/240 live and L/180 total load. Creep increase factor for dead load is 1.50.

Negative reaction(s) of -224# MAX. (See below) from a non-wind load case requires uplift connection.

120 mph wind, 15.00 ft mean hgt, ASCE 7-10, CLOSED bldg, not located within 9.00 ft from roof edge, RISK CAT II, EXP C, wind TC DL=3.5 psf, wind BC DL=5.0 psf. GCpi(+/-)=0.18

Wind loads and reactions based on MWFRS with additional C&C member design.

MWFRS loads based on trusses located at least 15.00 ft. from roof edge.

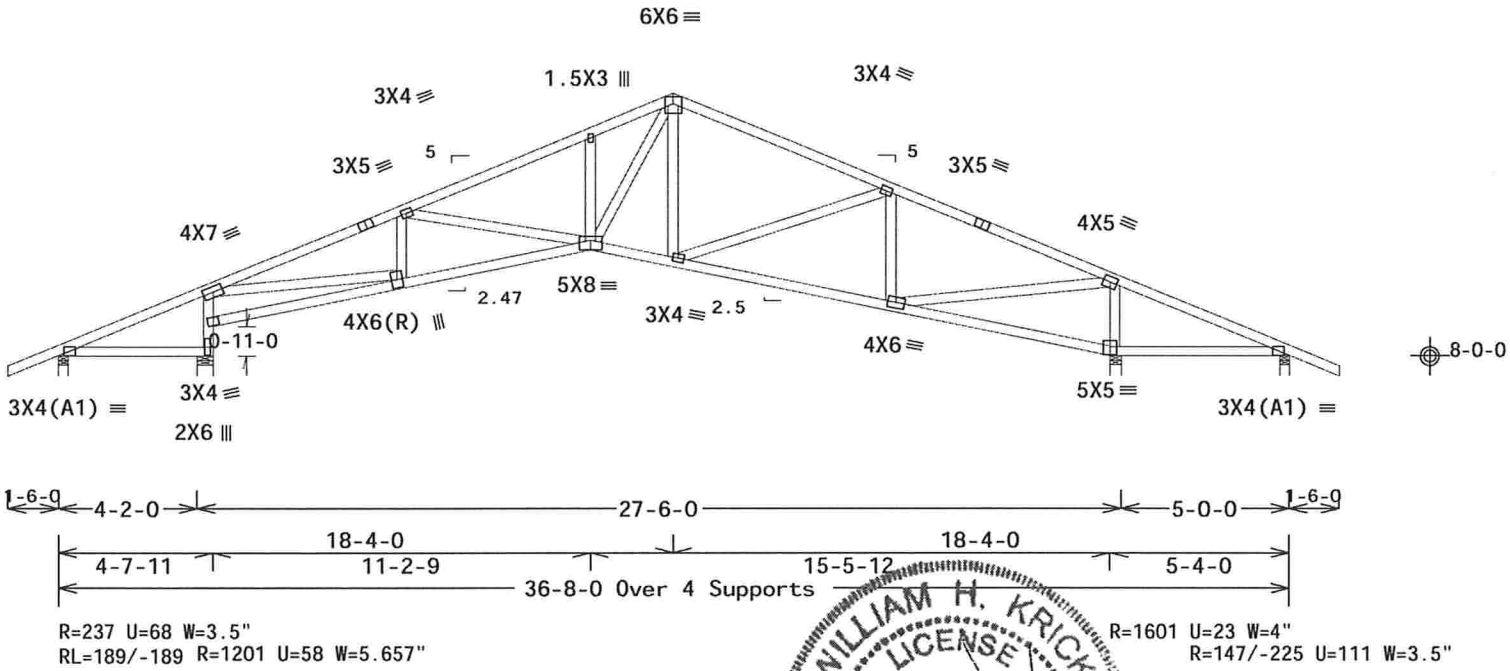

Design Crit: FBC2010Res/TPI-2007(STD)

PLT TYP. Wave FT/RT=20%(0%)/10(0) 10.03.11.0209.20 QTY:1 FL/-/4/-/-/R/- Scale =.1875"/Ft.

ALPINE
ITW Building Components Group Inc.
Haines City, FL 33844
FL COA #0 278

WARNING READ AND FOLLOW ALL NOTES ON THIS SHEET!
IMPORTANT FURNISH THIS DESIGN TO ALL CONTRACTORS INCLUDING INSTALLERS.

Trusses require extreme care in fabricating, handling, shipping, installing and bracing. Refer to and follow the latest edition of BCSI (Building Component Safety Information, by TPI and WTCA) for suggested practices prior to performing these functions. Installers shall provide temporary bracing per BCSI. Unless noted otherwise, top chord shall have properly attached structural sheathing and bottom chord shall have a properly attached rigid ceiling. Locations shown for permanent lateral restraint of webs shall have bracing installed per BCSI sections B3, B7 or B10, as applicable.

ITW Building Components Group Inc. (ITWBCG) shall not be responsible for any deviation from this design, any failure to build the truss in conformance with ANSI/TPI 1, or for handling, shipping, installation and bracing of trusses. Apply plates to each face of truss and position as shown above and on the Joint Details, unless noted otherwise. Refer to drawings 160A-Z for standard plate positions. A seal on this drawing or cover page listing this drawing, indicates acceptance of professional engineering responsibility solely for the design shown. The suitability and use of this design for any structure is the responsibility of the Building Designer per ANSI/TPI 1 Sec.2. For more information see: This job's general notes page; ITW-BCG: www.itwbcg.com; TPI: www.tpinst.org; WTCA: www.sbcindustry.com; ICC: www.iccsafe.org

WILLIAM H. KRICK LICENSE No. 70861 STATE OF FLORIDA PROFESSIONAL ENGINEER
03/18/2013

TC LL	20.0 PSF	REF	R487-- 85756
TC DL	7.0 PSF	DATE	03/18/13
BC DL	10.0 PSF	DRW	HCUSR487 13077002
BC LL	0.0 PSF	HC-ENG	WHK/WHK
TOT.LD.	37.0 PSF	SEQN-	69026
DUR.FAC.	1.25		
SPACING	24.0"	JREF-	1UUK487_Z01

THIS DWG PREPARED FROM COMPUTER INPUT (LOADS & DIMENSIONS) SUBMITTED BY TRUSS MFR.

(13-046B--Fill in later Taylor Model -- Mayfair Sub-Div - AV2 36'8" Common)

Top chord 2x4 SP_#1_12A
Bot chord 2x4 SP_#1_12A
Webs 2x4 SP_#3__12A

Lumber grades designated with "12A" use design values approved 1/5/2012 by ALSC.

(a) Continuous lateral bracing equally spaced on member.

Deflection meets L/240 live and L/180 total load. Creep increase factor for dead load is 1.50.

120 mph wind, 15.00 ft mean hgt, ASCE 7-10, CLOSED bldg, not located within 9.00 ft from roof edge, RISK CAT II, EXP C, wind TC DL=3.5 psf, wind BC DL=5.0 psf. GCpi(+/-)=0.18

Wind loads and reactions based on MWFRS with additional C&C member design.

Bottom chord checked for 10.00 psf non-concurrent live load.

MWFRS loads based on trusses located at least 15.00 ft. from roof edge.

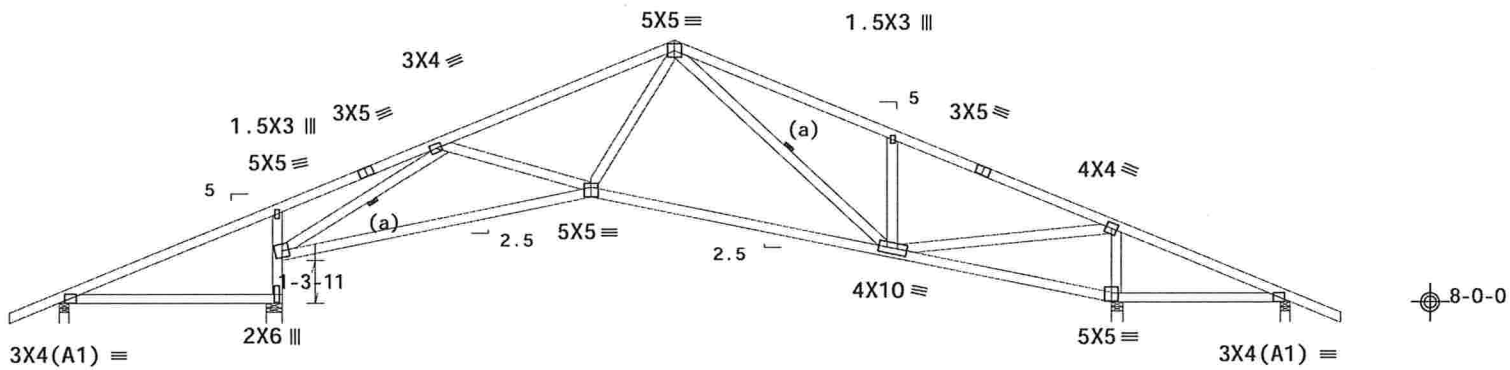

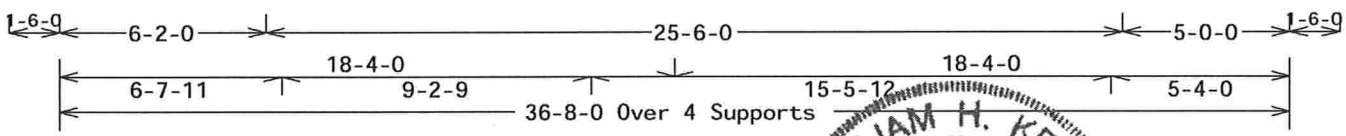

R=326 U=63 W=3.5"
RL=191/-191
R=1153 U=51 W=5.657"
R=1427 U=38 W=4"
R=194 U=52 W=3.5"

Design Crit: FBC2010Res/TPI-2007(STD)

PLT TYP. Wave — FT/RT=20%(0%)/10(0) — 10.03.11.0209.20 — QTY 1 — FL/-/4/-/-/R/- — Scale =.1875"/Ft.

ALPINE
ITW Building Components Group Inc.
Haines City, FL 33844
FL COA #0 278

WARNING READ AND FOLLOW ALL NOTES ON THIS SHEET!
IMPORTANT FURNISH THIS DESIGN TO ALL CONTRACTORS INCLUDING INSTALLERS.

Trusses require extreme care in fabricating, handling, shipping, installing and bracing. Refer to and follow the latest edition of BCSI (Building Component Safety Information, by TPI and WTCA) for safety practices prior to performing these functions. Installers shall provide temporary bracing per BCSI. Unless noted otherwise, top chord shall have properly attached structural sheathing and bottom chord shall have a properly attached rigid ceiling. Locations shown for permanent lateral restraint of webs shall have bracing installed per BCSI sections B3, B7 or B10, as applicable.

ITW Building Components Group Inc. (ITWBCG) shall not be responsible for any deviation from this design, any failure to build the truss in conformance with ANSI/TPI 1, or for handling, shipping, installation & bracing of trusses. Apply plates to each face of truss and position as shown above and on the Joint Details, unless noted otherwise. Refer to drawings 160A-Z for standard plate positions. A seal on this drawing or cover page listing this drawing, indicates acceptance of professional engineering responsibility solely for the design shown. The suitability and use of this design for any structure is the responsibility of the Building Designer per ANSI/TPI 1 Sec.2. For more information see: This job's general notes page; ITW-BCG: www.itwbcg.com; TPI: www.tpinst.org; WTCA: www.sbcindustry.com; ICC: www.iccsafe.org

WILLIAM H. KRICK LICENSE No. 70861 STATE OF FLORIDA PROFESSIONAL ENGINEER
03/18/2013

TC LL	20.0 PSF	REF	R487-- 85757
TC DL	7.0 PSF	DATE	03/18/13
BC DL	10.0 PSF	DRW	HCUSR487 13077003
BC LL	0.0 PSF	HC-ENG	WHK/WHK
TOT.LD.	37.0 PSF	SEQN-	69155
DUR.FAC.	1.25		
SPACING	24.0"	JREF-	1UUK487_Z01

THIS DWG PREPARED FROM COMPUTER INPUT (LOADS & DIMENSIONS) SUBMITTED BY TRUSS MFR.

(13-046B--Fill in later Taylor Model -- Mayfair Sub-Div - AV3 31'8" Common)

Top chord 2x4 SP_#1_12A
Bot chord 2x4 SP_#1_12A
Webs 2x4 SP_#3__12A

Lumber grades designated with "12A" use design values approved 1/5/2012 by ALSC.

Right cantilever is exposed to wind

Bottom chord checked for 10.00 psf non-concurrent live load.

MWFRS loads based on trusses located at least 15.00 ft. from roof edge.

120 mph wind, 15.00 ft mean hgt, ASCE 7-10, CLOSED bldg, not located within 9.00 ft from roof edge, RISK CAT II, EXP C, wind TC DL=3.5 psf, wind BC DL=5.0 psf. GCpi(+/-)=0.18

Wind loads and reactions based on MWFRS with additional C&C member design.

Right end vertical not exposed to wind pressure.

Deflection meets L/240 live and L/180 total load. Creep increase factor for dead load is 1.50.

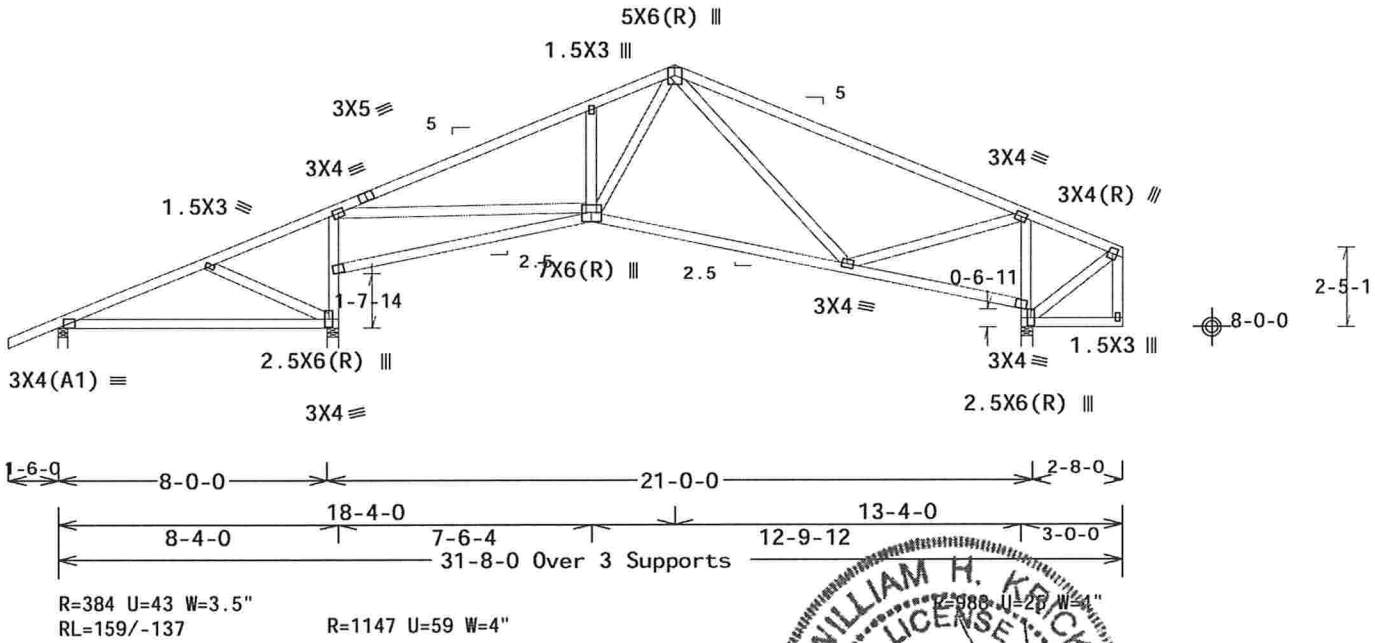

Design Crit: FBC2010Res/TPI-2007(STD)
FT/RT=20%(0%)/10(0)

PLT TYP. Wave

10.03.11.0209.20 QTY 1 FL/-/4/-/-/R/- Scale =.1875"/Ft.

WILLIAM H. KRICK LICENSE No. 70861 STATE OF FLORIDA PROFESSIONAL ENGINEER
03/18/2013

ALPINE
ITW Building Components Group Inc.
Haines City, FL 33844
FL COA #0 278

WARNING READ AND FOLLOW ALL NOTES ON THIS SHEET!
IMPORTANT FURNISH THIS DESIGN TO ALL CONTRACTORS INCLUDING INSTALLERS.

Trusses require extreme care in fabricating, handling, shipping, installing and bracing. Refer to and follow the latest edition of BCSI (Building Component Safety Information, by TPI and WTCA) for safety practices prior to performing these functions. Installers shall provide temporary bracing per BCSI. Unless noted otherwise, top chord shall have properly attached structural sheathing and bottom chord shall have a properly attached rigid ceiling. Locations shown for permanent lateral restraint of webs shall have bracing installed per BCSI sections B3, B7 or B10, as applicable.

ITW Building Components Group Inc. (ITWBCG) shall not be responsible for any deviation from this design, any failure to build the truss in conformance with ANSI/TPI 1, or for handling, shipping, installation and bracing of trusses. Apply plates to each face of truss and position as shown above and on the Joint Details, unless noted otherwise. Refer to drawings 160A-Z for standard plate positions. A seal on this drawing or cover page listing this drawing, indicates acceptance of professional engineering responsibility solely for the design shown. The suitability and use of this design for any structure is the responsibility of the Building Designer per ANSI/TPI 1 Sec.2. For more information see: This job's general notes page; ITW-BCG: www.itwbcg.com; TPI: www.tpinst.org; WTCA: www.sbcindustry.com; ICC: www.iccsafe.org

TC LL	20.0 PSF	REF	R487-- 85758
TC DL	7.0 PSF	DATE	03/18/13
BC DL	10.0 PSF	DRW	HCUSR487 13077004
BC LL	0.0 PSF	HC-ENG	WHK/WHK
TOT.LD.	37.0 PSF	SEQN-	69206
DUR.FAC.	1.25		
SPACING	24.0"	JREF-	1UUK487_Z01

THIS DWG PREPARED FROM COMPUTER INPUT (LOADS & DIMENSIONS) SUBMITTED BY TRUSS MFR.

(13-046B--Fill in later Taylor Model -- Mayfair Sub-Div - AV4 31'8" Common)

Top chord 2x4 SP_#1_12A
Bot chord 2x4 SP_#1_12A
Webs 2x4 SP_#3__12A

Lumber grades designated with "12A" use design values approved 1/5/2012 by ALSC.

Right cantilever is exposed to wind

(a) Continuous lateral bracing equally spaced on member.

Deflection meets L/240 live and L/180 total load. Creep increase factor for dead load is 1.50.

120 mph wind, 15.00 ft mean hgt, ASCE 7-10, CLOSED bldg, not located within 9.00 ft from roof edge, RISK CAT II, EXP C, wind TC DL=3.5 psf, wind BC DL=5.0 psf. GCpi(+/-)=0.18

Wind loads and reactions based on MWFRS with additional C&C member design.

Right end vertical not exposed to wind pressure.

Bottom chord checked for 10.00 psf non-concurrent live load.

MWFRS loads based on trusses located at least 15.00 ft. from roof edge.

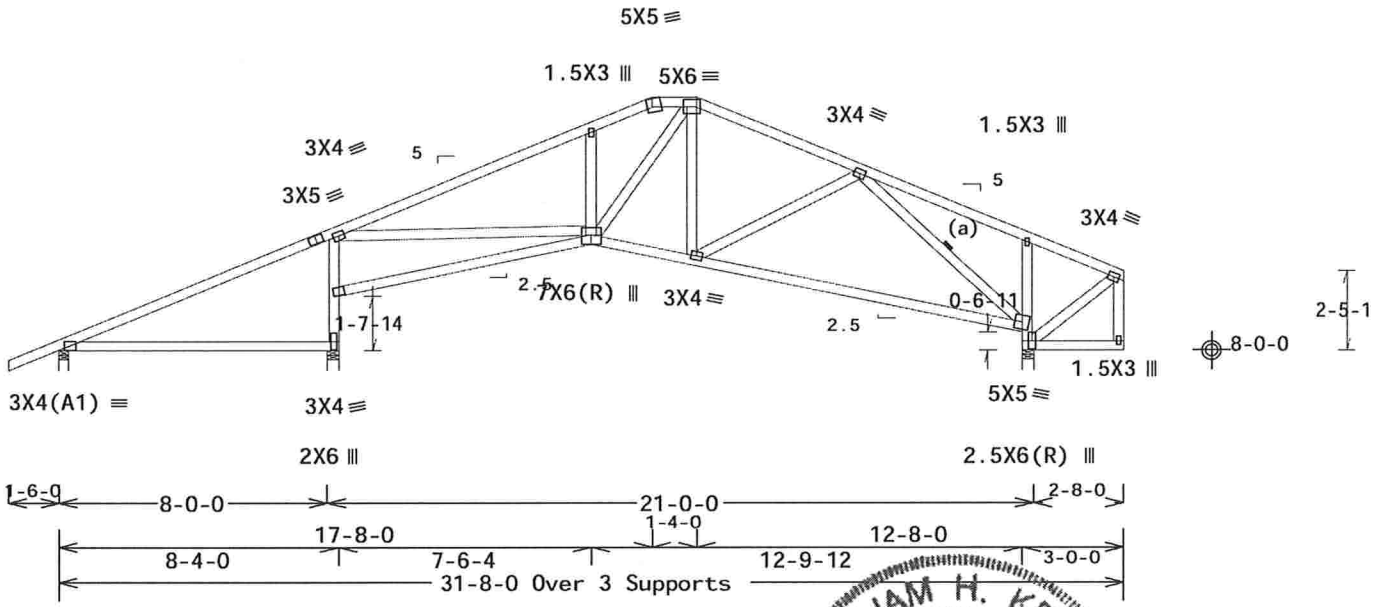

Design Crit: FBC2010Res/TPI-2007(STD)

PLT TYP. Wave

FT/RT=20%(0%)/10(0)

10.03.11.0209.20 QTY 1

FL/-/4/-/-/R/-

Scale =.1875"/Ft.

WILLIAM H. KRUCK LICENSE No. 70861 STATE OF FLORIDA PROFESSIONAL ENGINEER

03/18/2013

ALPINE
ITW Building Components Group Inc.
Haines City, FL 33844
FL COA #0 278

WARNING READ AND FOLLOW ALL NOTES ON THIS SHEET!
IMPORTANT FURNISH THIS DESIGN TO ALL CONTRACTORS INCLUDING INSTALLERS.

Trusses require extreme care in fabricating, handling, shipping, installing and bracing. Refer to and follow the latest edition of BCSI (Building Component Safety Information, by TPI and WTCA) for safety practices prior to performing these functions. Installers shall provide temporary bracing per BCSI. Unless noted otherwise, top chord shall have properly attached structural sheathing and bottom chord shall have a properly attached rigid ceiling. Locations shown for permanent lateral restraint of webs shall have bracing installed per BCSI sections B3, B7 or B10, as applicable.

ITW Building Components Group Inc. (ITWBCG) shall not be responsible for any deviation from this design, any failure to build the truss in conformance with ANSI/TPI 1, or for handling, shipping, installation and bracing of trusses. Apply plates to each face of truss and position as shown above and on the Joint Details, unless noted otherwise. Refer to drawings 160A-Z for standard plate positions. A seal on this drawing or cover page listing this drawing, indicates acceptance of professional engineering responsibility solely for the design shown. The suitability and use of this design for any structure is the responsibility of the Building Designer per ANSI/TPI 1 Sec.2. For more information see: This job's general notes page; ITW-BCG: www.itwbcg.com; TPI: www.tpinst.org; WTCA: www.sbcindustry.com; ICC: www.iccsafe.org

TC LL	20.0 PSF	REF	R487-- 85759
TC DL	7.0 PSF	DATE	03/18/13
BC DL	10.0 PSF	DRW	HCUSR487 13077005
BC LL	0.0 PSF	HC-ENG	WHK/WHK
TOT.LD.	37.0 PSF	SEQN-	69202
DUR.FAC.	1.25		
SPACING	24.0"	JREF-	1UUK487_Z01

THIS DWG PREPARED FROM COMPUTER INPUT (LOADS & DIMENSIONS) SUBMITTED BY TRUSS MFR.

(13-046B--Fill in later Taylor Model -- Mayfair Sub-Div - AV5 31'8" Common)

Top chord 2x4 SP_#1_12A
Bot chord 2x4 SP_#1_12A
Webs 2x4 SP_#3__12A

Lumber grades designated with "12A" use design values approved 1/5/2012 by ALSC.

Right cantilever is exposed to wind

Bottom chord checked for 10.00 psf non-concurrent live load.

MWFRS loads based on trusses located at least 15.00 ft. from roof edge.

120 mph wind, 15.00 ft mean hgt, ASCE 7-10, CLOSED bldg, not located within 9.00 ft from roof edge, RISK CAT II, EXP C, wind TC DL=3.5 psf, wind BC DL=5.0 psf. GCpi(+/-)=0.18

Wind loads and reactions based on MWFRS with additional C&C member design.

Right end vertical not exposed to wind pressure.

Deflection meets L/240 live and L/180 total load. Creep increase factor for dead load is 1.50.

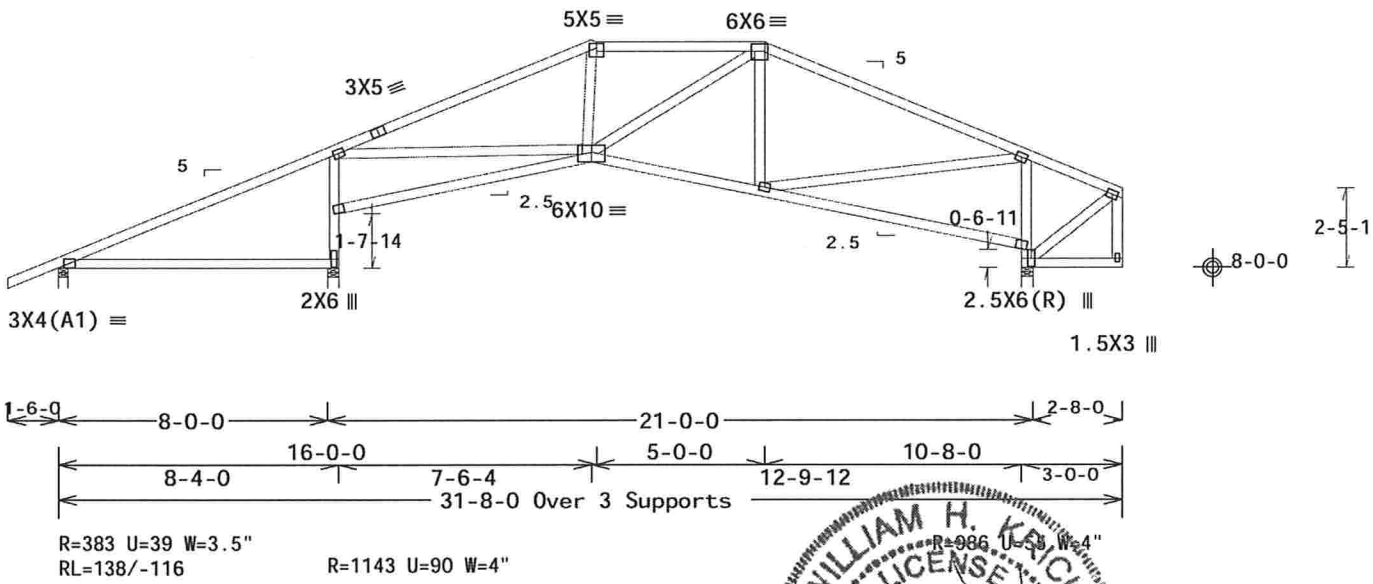

Note: All Plates Are 3X4 Except As Shown.

Design Crit: FBC2010Res/TPI-2007(STD)

PLT TYP. Wave FT/RT=20%(0%)/10(0) 10.03.11.0209.20 QTY:1 FL/-/4/-/-/R/- Scale =.1875"/Ft.

ALPINE
ITW Building Components Group Inc.
Haines City, FL 33844
FL COA #0 278

WARNING READ AND FOLLOW ALL NOTES ON THIS SHEET!
IMPORTANT FURNISH THIS DESIGN TO ALL CONTRACTORS INCLUDING INSTALLERS.

Trusses require extreme care in fabricating, handling, shipping, installing and bracing. Refer to and follow the latest edition of BCSI (Building Component Safety Information, by TPI and WTCA) for safety practices prior to performing these functions. Installers shall provide temporary bracing per BCSI. Unless noted otherwise, top chord shall have properly attached structural sheathing and bottom chord shall have a properly attached rigid ceiling. Locations shown for permanent lateral restraint of webs shall have bracing installed per BCSI sections B3, B7 or B10, as applicable.

ITW Building Components Group Inc. (ITWBCG) shall not be responsible for any deviation from this design, any failure to build the truss in conformance with ANSI/TPI 1, or for handling, shipping, installation and bracing of trusses. Apply plates to each face of truss and position as shown above and on the Joint Details, unless noted otherwise. Refer to drawings 160A-Z for standard plate positions. A seal on this drawing or cover page listing this drawing, indicates acceptance of professional engineering responsibility solely for the design shown. The suitability and use of this design for any structure is the responsibility of the Building Designer per ANSI/TPI 1 Sec.2. For more information see: This job's general notes page; ITW-BCG: www.itwbcg.com; TPI: www.tpinst.org; WTCA: www.sbcindustry.com; ICC: www.iccsafe.org

WILLIAM H. KERICK LICENSE No. 70861 STATE OF FLORIDA PROFESSIONAL ENGINEER
03/18/2013

TC LL	20.0 PSF	REF	R487-- 85760
TC DL	7.0 PSF	DATE	03/18/13
BC DL	10.0 PSF	DRW	HCUSR487 13077006
BC LL	0.0 PSF	HC-ENG	WHK/WHK
TOT.LD.	37.0 PSF	SEQN-	69217
DUR.FAC.	1.25		
SPACING	24.0"	JREF-	1UUK487_Z01

THIS DWG PREPARED FROM COMPUTER INPUT (LOADS & DIMENSIONS) SUBMITTED BY TRUSS MFR.

(13-046B--Fill in later Taylor Model -- Mayfair Sub-Div - AV6 31'8" Common)

Top chord 2x4 SP_#1_12A
Bot chord 2x4 SP_#1_12A
Webs 2x4 SP_#3__12A :W9 2x4 SP_#1_12A:

Lumber grades designated with "12A" use design values approved 1/5/2012 by ALSC.

Right cantilever is exposed to wind

(a) Continuous lateral bracing equally spaced on member.

Deflection meets L/240 live and L/180 total load. Creep increase factor for dead load is 1.50.

120 mph wind, 15.00 ft mean hgt, ASCE 7-10, CLOSED bldg, not located within 9.00 ft from roof edge, RISK CAT II, EXP C, wind TC DL=3.5 psf, wind BC DL=5.0 psf. GCpi(+/-)=0.18

Wind loads and reactions based on MWFRS with additional C&C member design.

Right end vertical not exposed to wind pressure.

Bottom chord checked for 10.00 psf non-concurrent live load.

MWFRS loads based on trusses located at least 15.00 ft. from roof edge.

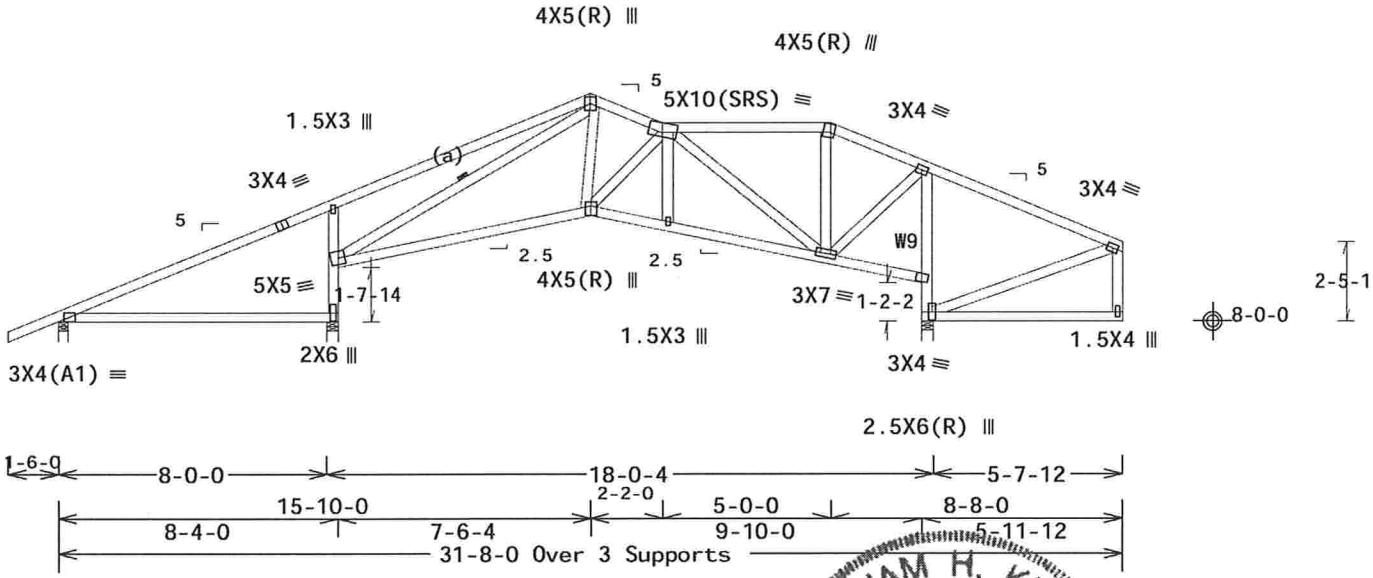

Design Crit: FBC2010Res/TPI-2007(STD)

PLT TYP. Wave FT/RT=20%(0%)/10(0) 10.03.11.0209.20 QTY 1 FL/-/4/-/-/R/- Scale =.1875"/Ft.

ALPINE
ITW Building Components Group Inc.
Haines City, FL 33844
FL COA #0 278

WARNING READ AND FOLLOW ALL NOTES ON THIS SHEET!
IMPORTANT FURNISH THIS DESIGN TO ALL CONTRACTORS INCLUDING INSTALLERS.

Trusses require extreme care in fabricating, handling, shipping, installing and bracing. Refer to and follow the latest edition of BCSI (Building Component Safety Information, by TPI and WTCA) for safety practices prior to performing these functions. Installers shall provide temporary bracing per BCSI. Unless noted otherwise, top chord shall have properly attached structural sheathing and bottom chord shall have a properly attached rigid ceiling. Locations shown for permanent lateral restraint of webs shall have bracing installed per BCSI sections B3, B7 or B10, as applicable.

ITW Building Components Group Inc. (ITWBCG) shall not be responsible for any deviation from this design, any failure to build the truss in conformance with ANSI/TPI 1, or for handling, shipping, installation and bracing of trusses. Apply plates to each face of truss and position as shown above and on the Joint Details, unless noted otherwise. Refer to drawings 160A-Z for standard plate positions. A seal on this drawing or cover page listing this drawing, indicates acceptance of professional engineering responsibility solely for the design shown. The suitability and use of this design for any structure is the responsibility of the Building Designer per ANSI/TPI 1 Sec.2. For more information see: This job's general notes page; ITW-BCG: www.itwbcg.com; TPI: www.tpinst.org; WTCA: www.sbcindustry.com; ICC: www.iccsafe.org

WILLIAM H. KRICK LICENSE No. 70861 STATE OF FLORIDA PROFESSIONAL ENGINEER
03/18/2013

TC LL	20.0 PSF	REF	R487-- 85761
TC DL	7.0 PSF	DATE	03/18/13
BC DL	10.0 PSF	DRW	HCUSR487 13077007
BC LL	0.0 PSF	HC-ENG	WHK/WHK
TOT.LD.	37.0 PSF	SEQN-	69269
DUR.FAC.	1.25		
SPACING	24.0"	JREF-	1UUK487_Z01

THIS DWG PREPARED FROM COMPUTER INPUT (LOADS & DIMENSIONS) SUBMITTED BY TRUSS MFR.

(13-046B--Fill in later Taylor Model -- Mayfair Sub-Div - AV7 31'8" Common)

Top chord 2x4 SP_#1_12A
Bot chord 2x4 SP_#1_12A
Webs 2x4 SP_#3__12A :W8 2x4 SP_#1_12A:

Lumber grades designated with "12A" use design values approved 1/5/2012 by ALSC.

Right cantilever is exposed to wind

(a) Continuous lateral bracing equally spaced on member.

Deflection meets L/240 live and L/180 total load. Creep increase factor for dead load is 1.50.

120 mph wind, 15.00 ft mean hgt, ASCE 7-10, CLOSED bldg, not located within 9.00 ft from roof edge, RISK CAT II, EXP C, wind TC DL=3.5 psf, wind BC DL=5.0 psf. GCpi(+/-)=0.18

Wind loads and reactions based on MWFRS with additional C&C member design.

Right end vertical not exposed to wind pressure.

Bottom chord checked for 10.00 psf non-concurrent live load.

MWFRS loads based on trusses located at least 15.00 ft. from roof edge.

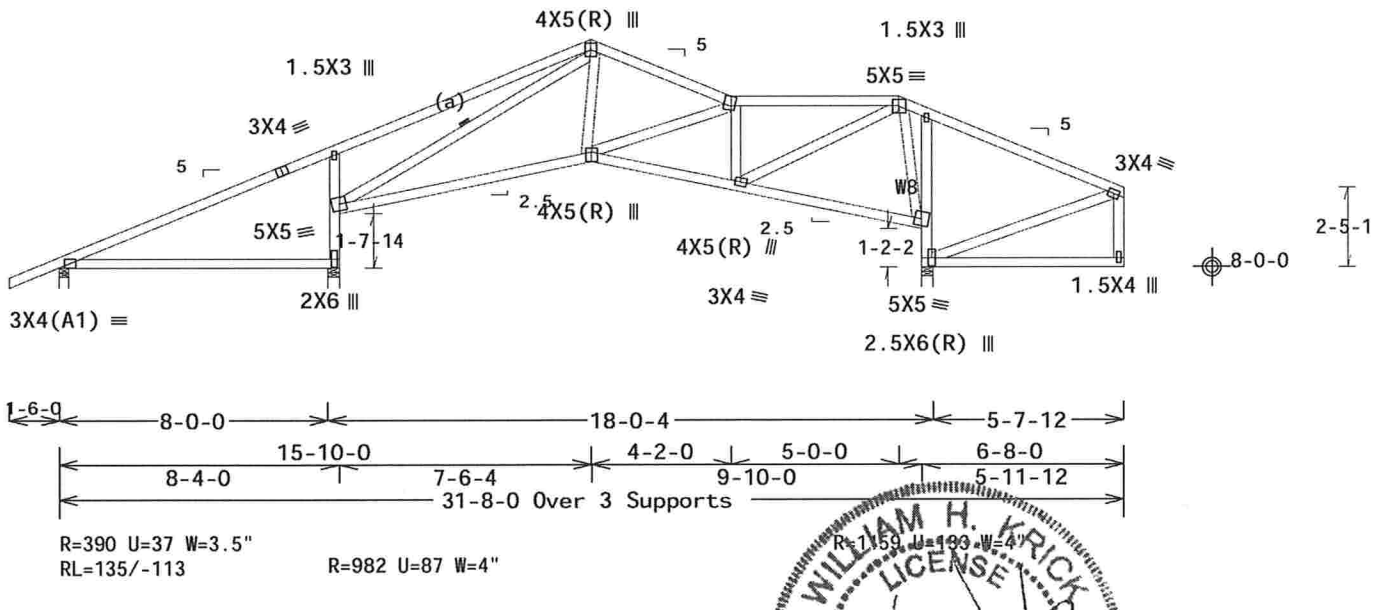

Design Crit: FBC2010Res/TPI-2007(STD)

PLT TYP. Wave FT/RT=20%(0%)/10(0) 10.03.11.0209.20 QTY:1 FL/-/4/-/-/R/- Scale =.1875"/Ft.

WILLIAM H. KRICK LICENSE No. 70861 STATE OF FLORIDA PROFESSIONAL ENGINEER

03/18/2013

ALPINE
ITW Building Components Group Inc.
Haines City, FL 33844
FL COA #0 278

WARNING READ AND FOLLOW ALL NOTES ON THIS SHEET!
IMPORTANT FURNISH THIS DESIGN TO ALL CONTRACTORS INCLUDING INSTALLERS.

Trusses require extreme care in fabricating, handling, shipping, installing and bracing. Refer to and follow the latest edition of BCSI (Building Component Safety Information, by TPI and WTCA) for safety practices prior to performing these functions. Installers shall provide temporary bracing per BCSI. Unless noted otherwise, top chord shall have properly attached structural sheathing and bottom chord shall have a properly attached rigid ceiling. Locations shown for permanent lateral restraint of webs shall have bracing installed per BCSI sections B3, B7 or B10, as applicable.

ITW Building Components Group Inc. (ITWBCG) shall not be responsible for any deviation from this design, nor any failure to build the truss in conformance with ANSI/TPI 1, or for handling, shipping, installation and bracing of trusses. Apply plates to each face of truss and position as shown above and on the Joint Details, unless noted otherwise. Refer to drawings 160A-Z for standard plate positions. A seal on this drawing or cover page listing this drawing, indicates acceptance of professional engineering responsibility solely for the design shown. The suitability and use of this design for any structure is the responsibility of the Building Designer per ANSI/TPI 1 Sec.2. For more information see: This job's general notes page; ITW-BCG: www.itwbcg.com; TPI: www.tpinst.org; WTCA: www.sbcindustry.com; ICC: www.iccsafe.org

TC LL	20.0 PSF	REF	R487-- 85762
TC DL	7.0 PSF	DATE	03/18/13
BC DL	10.0 PSF	DRW	HCUSR487 13077008
BC LL	0.0 PSF	HC-ENG	WHK/WHK
TOT.LD.	37.0 PSF	SEQN-	69273
DUR.FAC.	1.25		
SPACING	24.0"	JREF-	1UUK487_Z01

THIS DWG PREPARED FROM COMPUTER INPUT (LOADS & DIMENSIONS) SUBMITTED BY TRUSS MFR.

(13-046B--Fill in later Taylor Model -- Mayfair Sub-Div - B 20'8" Common)

Top chord 2x4 SP_#1_12A
Bot chord 2x4 SP_#1_12A
Webs 2x4 SP_#3__12A

Lumber grades designated with "12A" use design values approved 1/5/2012 by ALSC.

Bottom chord checked for 10.00 psf non-concurrent live load.

120 mph wind, 15.00 ft mean hgt, ASCE 7-10, CLOSED bldg, Located anywhere in roof, RISK CAT II, EXP C, wind TC DL=3.5 psf, wind BC DL=5.0 psf. GCpi(+/-)=0.18

Wind loads and reactions based on MWFRS with additional C&C member design.

Deflection meets L/240 live and L/180 total load. Creep increase factor for dead load is 1.50.

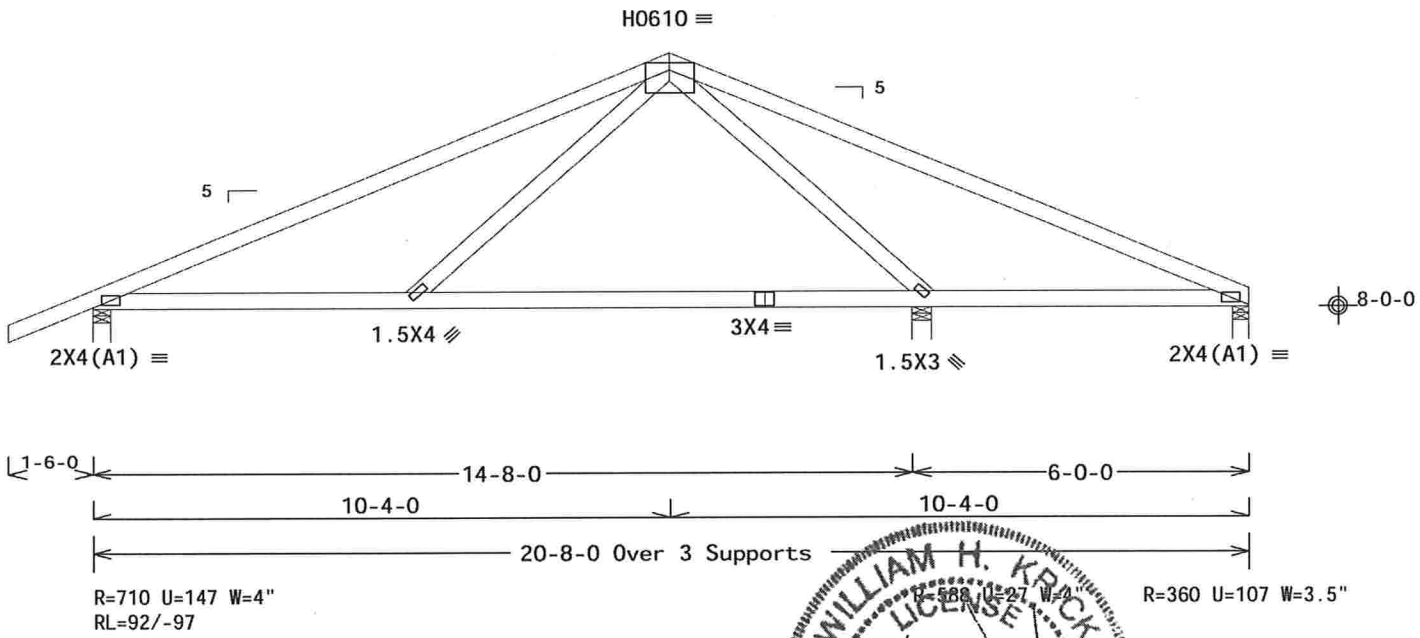

Design Crit: FBC2010Res/TPI-2007(STD)

PLT TYP. 20 Gauge HS,Wave FT/RT=20%(0%)/10(0) 10.03.11.0209.20 QTY 1 FL/-/4/-/-/R/- Scale =.3125"/Ft.

ALPINE
ITW Building Components Group Inc.
Haines City, FL 33844
FL COA #0 278

WARNING READ AND FOLLOW ALL NOTES ON THIS SHEET!
IMPORTANT FURNISH THIS DESIGN TO ALL CONTRACTORS INCLUDING INSTALLERS.

Trusses require extreme care in fabricating, handling, shipping, installing and bracing. Refer to and follow the latest edition of BCSI (Building Component Safety Information, by TPI and WTCA) for safety practices prior to performing these functions. Installers shall provide temporary bracing per BCSI. Unless noted otherwise, top chord shall have properly attached structural sheathing and bottom chord shall have a properly attached rigid ceiling. Locations shown for permanent lateral restraint of webs shall have bracing installed per BCSI sections B3, B7 or B10, as applicable.

ITW Building Components Group Inc. (ITWBCG) shall not be responsible for any deviation from this design, any failure to build the truss in conformance with ANSI/TPI 1, or for handling, shipping, installation & bracing of trusses. Apply plates to each face of truss and position as shown above and on the Joint Details, unless noted otherwise. Refer to drawings 160A-Z for standard plate positions. A seal on this drawing or cover page listing this drawing, indicates acceptance of professional engineering responsibility solely for the design shown. The suitability and use of this design for any structure is the responsibility of the Building Designer per ANSI/TPI 1 Sec.2. For more information see: This job's general notes page; ITW-BCG: www.itwbcg.com; TPI: www.tpinst.org; WTCA: www.sbcindustry.com; ICC: www.iccsafe.org

WILLIAM H. KRUCK
LICENSE
No. 70861
STATE OF FLORIDA
PROFESSIONAL ENGINEER
03/18/2013

TC LL	20.0 PSF	REF	R487-- 85763
TC DL	7.0 PSF	DATE	03/18/13
BC DL	10.0 PSF	DRW	HCUSR487 13077009
BC LL	0.0 PSF	HC-ENG	WHK/WHK
TOT.LD.	37.0 PSF	SEQN-	69310
DUR.FAC.	1.25		
SPACING	24.0"	JREF-	1UUK487_Z01

THIS DWG PREPARED FROM COMPUTER INPUT (LOADS & DIMENSIONS) SUBMITTED BY TRUSS MFR.

(13-046B--Fill in later Taylor Model -- Mayfair Sub-Div - B1 20'8" Common)

Top chord 2x4 SP_#1_12A
Bot chord 2x4 SP_#1_12A
Webs 2x4 SP_#3__12A

Lumber grades designated with "12A" use design values approved 1/5/2012 by ALSC.

Bottom chord checked for 10.00 psf non-concurrent live load.

120 mph wind, 15.00 ft mean hgt, ASCE 7-10, CLOSED bldg, not located within 4.50 ft from roof edge, RISK CAT II, EXP C, wind TC DL=3.5 psf, wind BC DL=5.0 psf. GCpi(+/-)=0.18

Wind loads and reactions based on MWFRS with additional C&C member design.

Deflection meets L/240 live and L/180 total load. Creep increase factor for dead load is 1.50.

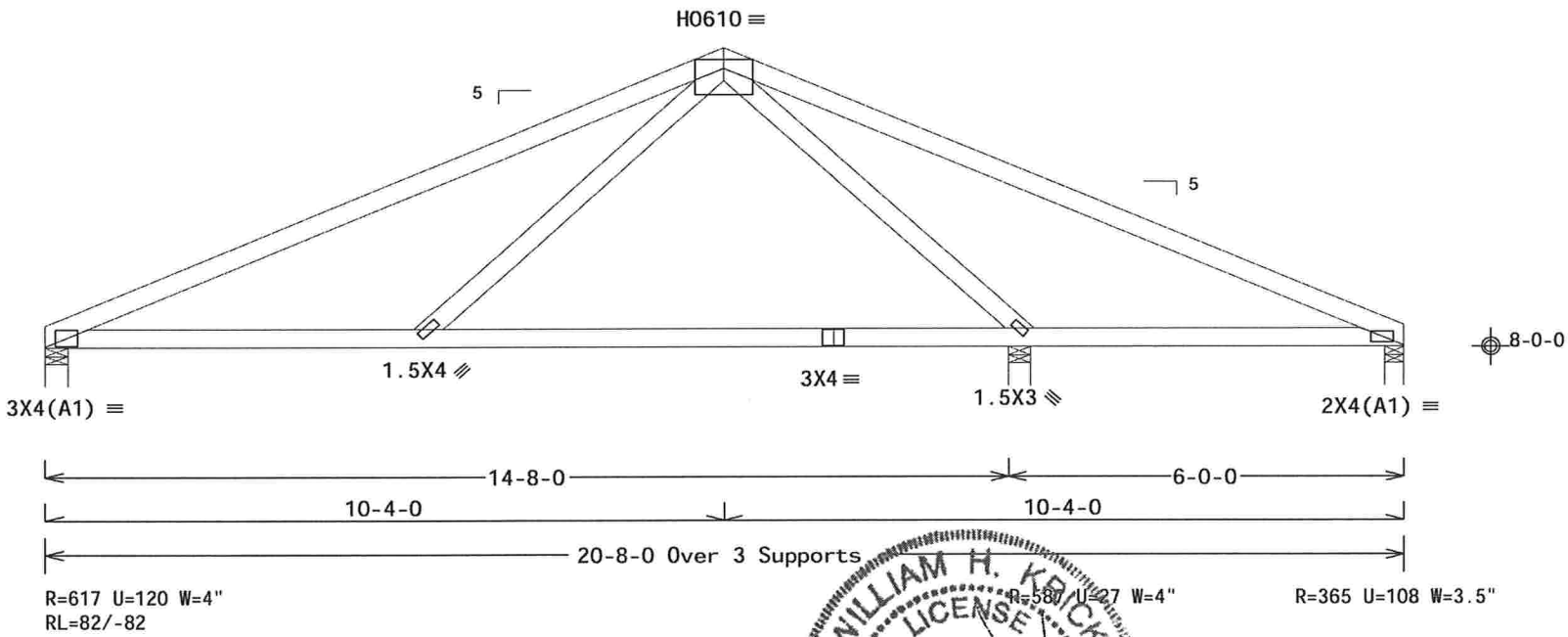

Design Crit: FBC2010Res/TPI-2007(STD)

PLT TYP. 20 Gauge HS,Wave | FT/RT=20%(0%)/10(0) | 10.03.11.0209.20 | QTY:1 | FL/-/4/-/-/R/- | Scale =.375"/Ft.

ALPINE
ITW Building Components Group Inc.
Haines City, FL 33844
FL COA #0 278

WARNING READ AND FOLLOW ALL NOTES ON THIS SHEET!
IMPORTANT FURNISH THIS DESIGN TO ALL CONTRACTORS INCLUDING INSTALLERS.

Trusses require extreme care in fabricating, handling, shipping, installing and bracing. Refer to and follow the latest edition of BCSI (Building Component Safety Information, by TPI and WTCA) for safety practices prior to performing these functions. Installers shall provide temporary bracing per BCSI. Unless noted otherwise, top chord shall have properly attached structural sheathing and bottom chord shall have a properly attached rigid ceiling. Locations shown for permanent lateral restraint of webs shall have bracing installed per BCSI sections B3, B7 or B10, as applicable.

ITW Building Components Group Inc. (ITWBCG) shall not be responsible for any deviation from this design, any failure to build the truss in conformance with ANSI/TPI 1, or for handling, shipping, installation and bracing of trusses. Apply plates to each face of truss and position as shown above and on the Joint Details, unless noted otherwise. Refer to drawings 160A-Z for standard plate positions. A seal on this drawing or cover page listing this drawing, indicates acceptance of professional engineering responsibility solely for the design shown. The suitability and use of this design for any structure is the responsibility of the Building Designer per ANSI/TPI 1 Sec.2. For more information see: This job's general notes page; ITW-BCG: www.itwbcg.com; TPI: www.tpinst.org; WTCA: www.sbcindustry.com; ICC: www.iccsafe.org

WILLIAM H. KRUCK LICENSED No. 70861 STATE OF FLORIDA PROFESSIONAL ENGINEER
03/18/2013

TC LL	20.0 PSF	REF	R487-- 85764
TC DL	7.0 PSF	DATE	03/18/13
BC DL	10.0 PSF	DRW	HCUSR487 13077010
BC LL	0.0 PSF	HC-ENG	WHK/WHK
TOT.LD.	37.0 PSF	SEQN-	69306
DUR.FAC.	1.25		
SPACING	24.0"	JREF-	1UUK487_Z01

THIS DWG PREPARED FROM COMPUTER INPUT (LOADS & DIMENSIONS) SUBMITTED BY TRUSS MFR.

(13-046B--Fill in later Taylor Model -- Mayfair Sub-Div - BDG 20'8" Gable)

Top chord 2x4 SP M-30 :T2 2x4 SP_#1_12A:
Bot chord 2x4 SP M-30
Webs 2x4 SP_#3__12A
:Stack Chord SC1 2x4 SP_#1_12A::Stack Chord SC2 2x4 SP_#1_12A:

Lumber grades designated with "12A" use design values approved 1/5/2012 by ALSC.

See DWGS A12015ENC100212, GBLLETIN0212, & GABRST100212 for more requirements.

Bottom chord checked for 10.00 psf non-concurrent live load.

Deflection meets L/240 live and L/180 total load. Creep increase factor for dead load is 1.50.

+ MEMBER TO BE LATERALLY BRACED FOR HORIZONTAL WIND LOADS. BRACING SYSTEM TO BE DESIGNED AND FURNISHED BY OTHERS.

120 mph wind, 15.00 ft mean hgt, ASCE 7-10, CLOSED bldg, Located anywhere in roof, RISK CAT II, EXP C, wind TC DL=3.5 psf, wind BC DL=5.0 psf. GCpi(+/-)=0.18

Wind loads and reactions based on MWFRS with additional C&C member design.

Gable end supports 8" max rake overhang.

Stacked top chord must NOT be notched or cut in area (NNL). Dropped top chord braced at 24" o.c. intervals. Attach stacked top chord (SC) to dropped top chord in notchable area using 3x4 tie-plates 24" o.c. Center plate on stacked/dropped chord interface, plate length perpendicular to chord length. Splice top chord in notchable area using 3x6.

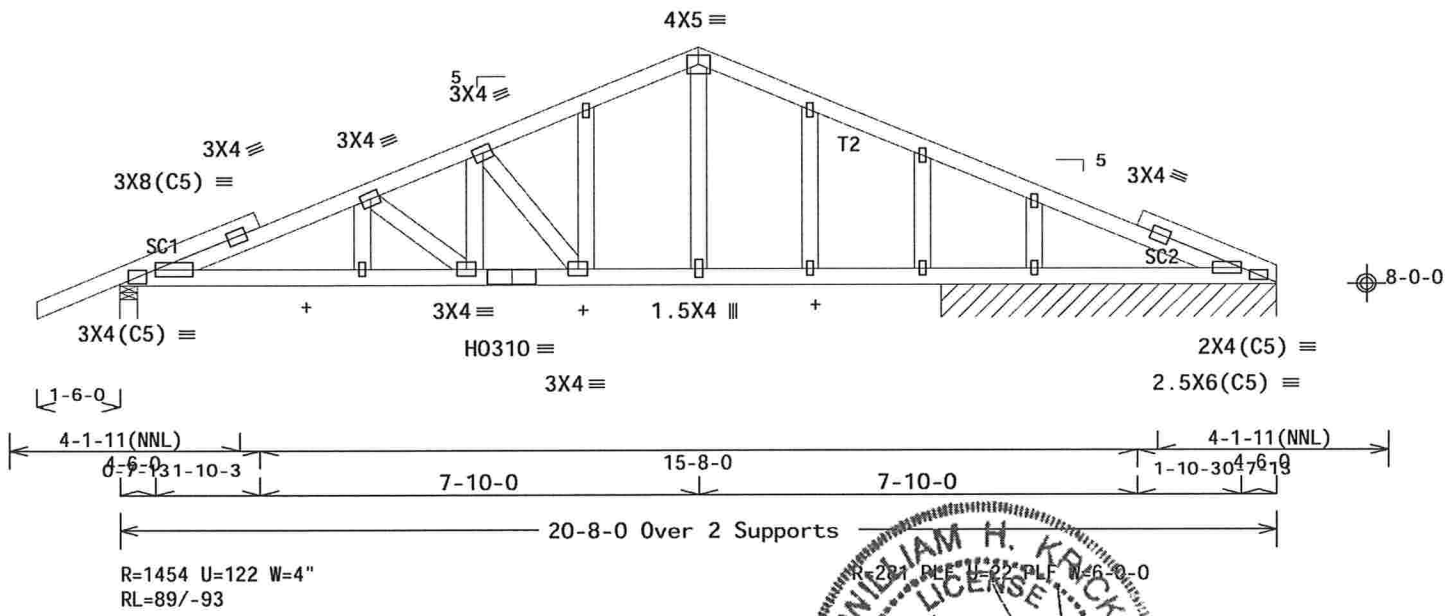

Note: All Plates Are 1.5X3 Except As Shown.

Design Crit: FBC2010Res/TPI-2007(STD)

PLT TYP. 20 Gauge HS,Wave FT/RT=20%(0%)/10(0) 10.03.11.0209.19 QTY 1 FL/-/4/-/-/R/- Scale =.3125"/Ft.

ALPINE
ITW Building Components Group Inc.
Haines City, FL 33844
FL COA #0 278

WARNING READ AND FOLLOW ALL NOTES ON THIS SHEET!
IMPORTANT FURNISH THIS DESIGN TO ALL CONTRACTORS INCLUDING INSTALLERS.

Trusses require extreme care in fabricating, handling, shipping, installing and bracing. Refer to and follow the latest edition of BCSI (Building Component Safety Information, by TPI and WTCA) for general practices prior to performing these functions. Installers shall provide temporary bracing per BCSI. Unless noted otherwise, top chord shall have properly attached structural sheathing and bottom chord shall have a properly attached rigid ceiling. Locations shown for permanent lateral restraint of webs shall have bracing installed per BCSI sections B3, B7 or B10, as applicable.

ITW Building Components Group Inc. (ITWBCG) shall not be responsible for any deviation from this design, any failure to build the truss in conformance with ANSI/TPI 1, or for handling, shipping, installation and bracing of trusses. Apply plates to each face of truss and position as shown above and on the Joint Details, unless noted otherwise. Refer to drawings 160A-Z for standard plate positions. A seal on this drawing or cover page listing this drawing, indicates acceptance of professional engineering responsibility solely for the design shown. The suitability and use of this design for any structure is the responsibility of the Building Designer per ANSI/TPI 1 Sec.2. For more information see: This job's general notes page; ITW-BCG: www.itwbcg.com; TPI: www.tpinst.org; WTCA: www.sbcindustry.com; ICC: www.iccsafe.org

WILLIAM H. KRICK LICENSE No. 70861 STATE OF FLORIDA PROFESSIONAL ENGINEER
03/18/2013

TC LL	20.0 PSF	REF	R487-- 85765
TC DL	7.0 PSF	DATE	03/18/13
BC DL	10.0 PSF	DRW	HCUSR487 13077011
BC LL	0.0 PSF	HC-ENG	WHK/WHK
TOT.LD.	37.0 PSF	SEQN-	52594
DUR.FAC.	1.25		
SPACING	24.0"	JREF-	1UUK487_Z01

THIS DWG PREPARED FROM COMPUTER INPUT (LOADS & DIMENSIONS) SUBMITTED BY TRUSS MFR.

(13-046B--Fill in later Taylor Model -- Mayfair Sub-Div - BG 20'8" Common Girder)

Top chord 2x4 SP_#1_12A
Bot chord 2x6 SP M-26 :B2 2x6 SP_#2_12A:
Webs 2x4 SP_#3__12A

Lumber grades designated with "12A" use design values approved 1/5/2012 by ALSC.

Negative reaction(s) of -284# MAX. (See below) from a non-wind load case requires uplift connection.

Wind loads and reactions based on MWFRS.

(a) Continuous lateral bracing equally spaced on member.

Deflection meets L/240 live and L/180 total load. Creep increase factor for dead load is 1.50.

Special loads
------(Lumber Dur.Fac.=1.25 / Plate Dur.Fac.=1.25)
TC- From 55 plf at 0.00 to 55 plf at 10.33
TC- From 55 plf at 10.33 to 55 plf at 20.67
BC- From 20 plf at 0.00 to 20 plf at 20.67
BC- 1627.00 lb Conc. Load at 1.73
BC- 812.20 lb Conc. Load at 3.73
BC- 824.81 lb Conc. Load at 5.73

120 mph wind, 15.00 ft mean hgt, ASCE 7-10, CLOSED bldg, not located within 9.00 ft from roof edge, RISK CAT II, EXP C, wind TC DL=3.5 psf, wind BC DL=5.0 psf. GCpi(+/-)=0.18

Bottom chord checked for 10.00 psf non-concurrent live load.

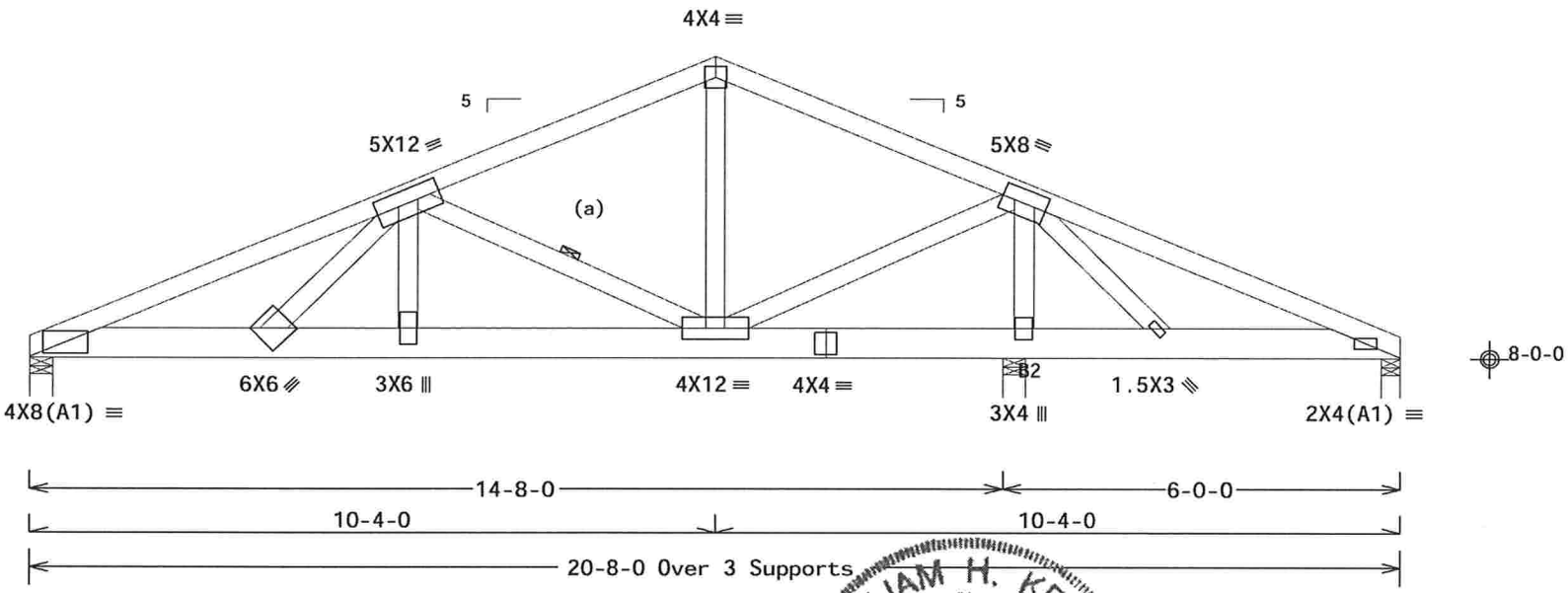

Design Crit: FBC2010Res/TPI-2007(STD)
PLT TYP. Wave FT/RT=20%(0%)/10(0) 10.03.11.0209.20 QTY 1 FL/-/4/-/-/R/- Scale =.375"/Ft.

WILLIAM H. KRICK LICENSED No. 70861 STATE OF FLORIDA PROFESSIONAL ENGINEER
03/18/2013

ALPINE
ITW Building Components Group Inc.
Haines City, FL 33844
FL COA #0 278

WARNING READ AND FOLLOW ALL NOTES ON THIS SHEET!
IMPORTANT FURNISH THIS DESIGN TO ALL CONTRACTORS INCLUDING INSTALLERS.

Trusses require extreme care in fabricating, handling, shipping, installing and bracing. Refer to and follow the latest edition of BCSI (Building Component Safety Information, by TPI and WTCA) for safety practices prior to performing these functions. Installers shall provide temporary bracing per BCSI. Unless noted otherwise, top chord shall have properly attached structural sheathing and bottom chord shall have a properly attached rigid ceiling. Locations shown for permanent lateral restraint of webs shall have bracing installed per BCSI sections B3, B7 or B10, as applicable.

ITW Building Components Group Inc. (ITWBCG) shall not be responsible for any deviation from this design, any failure to build the truss in conformance with ANSI/TPI 1, or for handling, shipping, installation & bracing of trusses. Apply plates to each face of truss and position as shown above and on the Joint Details, unless noted otherwise. Refer to drawings 160A-Z for standard plate positions. A seal on this drawing or cover page listing this drawing, indicates acceptance of professional engineering responsibility solely for the design shown. The suitability and use of this design for any structure is the responsibility of the Building Designer per ANSI/TPI 1 Sec.2. For more information see: This job's general notes page; ITW-BCG: www.itwbcg.com; TPI: www.tpinst.org; WTCA: www.sbcindustry.com; ICC: www.iccsafe.org

TC LL	20.0 PSF	REF	R487-- 85766
TC DL	7.0 PSF	DATE	03/18/13
BC DL	10.0 PSF	DRW	HCUSR487 13077012
BC LL	0.0 PSF	HC-ENG	WHK/WHK
TOT.LD.	37.0 PSF	SEQN-	69352
DUR.FAC.	1.25		
SPACING	24.0"	JREF-	1UUK487_Z01

THIS DWG PREPARED FROM COMPUTER INPUT (LOADS & DIMENSIONS) SUBMITTED BY TRUSS MFR.

(13-046B--Fill in later Taylor Model -- Mayfair Sub-Div - C 20' Common)

Top chord 2x4 SP_#1_12A
Bot chord 2x4 SP_#1_12A
Webs 2x4 SP_#3__12A

Lumber grades designated with "12A" use design values approved 1/5/2012 by ALSC.

Bottom chord checked for 10.00 psf non-concurrent live load.

120 mph wind, 15.00 ft mean hgt, ASCE 7-10, CLOSED bldg, Located anywhere in roof, RISK CAT II, EXP C, wind TC DL=3.5 psf, wind BC DL=5.0 psf. GCpi(+/-)=0.18

Wind loads and reactions based on MWFRS with additional C&C member design.

Deflection meets L/240 live and L/180 total load. Creep increase factor for dead load is 1.50.

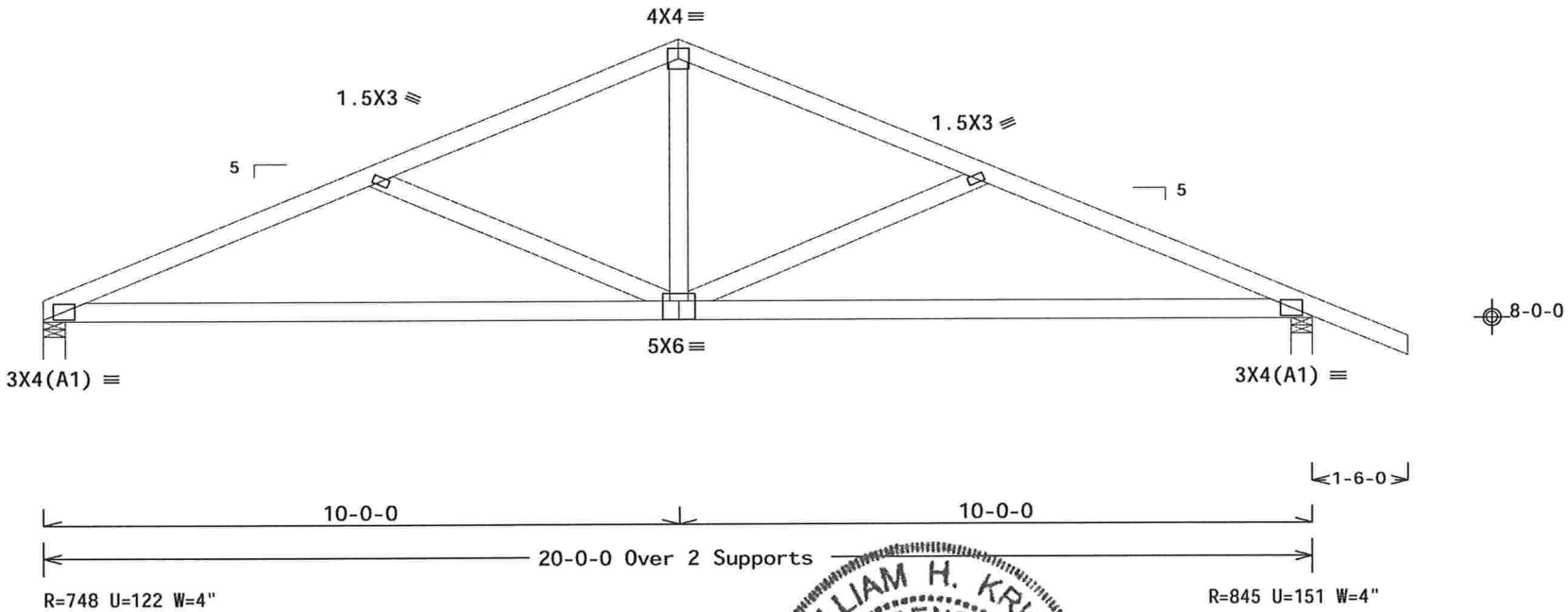

Design Crit: FBC2010Res/TPI-2007(STD)

PLT TYP. Wave | FT/RT=20%(0%)/10(0) | 10.03.11.0209.19 | QTY:8 | FL/-/4/-/-/R/- | Scale =.375"/Ft.

WILLIAM H. KRICK LICENSE No 70861 STATE OF FLORIDA PROFESSIONAL ENGINEER 03/18/2013

ALPINE
ITW Building Components Group Inc.
Haines City, FL 33844
FL COA #0 278

WARNING READ AND FOLLOW ALL NOTES ON THIS SHEET!
IMPORTANT FURNISH THIS DESIGN TO ALL CONTRACTORS INCLUDING INSTALLERS.

Trusses require extreme care in fabricating, handling, shipping, installing and bracing. Refer to and follow the latest edition of BCSI (Building Component Safety Information, by TPI and WTCA) for safety practices prior to performing these functions. Installers shall provide temporary bracing per BCSI. Unless noted otherwise, top chord shall have properly attached structural sheathing and bottom chord shall have a properly attached rigid ceiling. Locations shown for permanent lateral restraint of webs shall have bracing installed per BCSI sections B3, B7 or B10, as applicable.

ITW Building Components Group Inc. (ITWBCG) shall not be responsible for any deviation from this design, any failure to build the truss in conformance with ANSI/TPI 1, or for handling, shipping, installation and bracing of trusses. Apply plates to each face of truss and position as shown above and on the Joint Details, unless noted otherwise. Refer to drawings 160A-Z for standard plate positions. A seal on this drawing or cover page listing this drawing, indicates acceptance of professional engineering responsibility solely for the design shown. The suitability and use of this design for any structure is the responsibility of the Building Designer per ANSI/TPI 1 Sec.2. For more information see: This job's general notes page; ITW-BCG: www.itwbcg.com; TPI: www.tpinst.org; WTCA: www.sbcindustry.com; ICC: www.iccsafe.org

TC LL	20.0 PSF	REF	R487-- 85767
TC DL	7.0 PSF	DATE	03/18/13
BC DL	10.0 PSF	DRW	HCUSR487 13077013
BC LL	0.0 PSF	HC-ENG	WHK/WHK
TOT.LD.	37.0 PSF	SEQN-	52473
DUR.FAC.	1.25		
SPACING	24.0"	JREF-	1UUK487_Z01

(13-046B--Fill in later Taylor Model -- Mayfair Sub-Div - CDG 20' Gable)

Top chord 2x4 SP_#1_12A
Bot chord 2x4 SP_#1_12A
Webs 2x4 SP_#3__12A
:Stack Chord SC1 2x4 SP_#1_12A::Stack Chord SC2 2x4 SP_#1_12A:

Lumber grades designated with "12A" use design values approved 1/5/2012 by ALSC.

See DWGS A12015ENC100212, GBLLETIN0212, & GABRST100212 for more requirements.

In lieu of structural panels use purlins to brace TC @ 24" OC.

Bottom chord checked for 10.00 psf non-concurrent live load.

Deflection meets L/240 live and L/180 total load. Creep increase factor for dead load is 1.50.

120 mph wind, 15.00 ft mean hgt, ASCE 7-10, CLOSED bldg, Located anywhere in roof, RISK CAT II, EXP C, wind TC DL=3.5 psf, wind BC DL=5.0 psf. GCpi(+/-)=0.18

Wind loads and reactions based on MWFRS with additional C&C member design.

Gable end supports 8" max rake overhang.

Stacked top chord must NOT be notched or cut in area (NNL). Dropped top chord braced at 24" o.c. intervals. Attach stacked top chord (SC) to dropped top chord in notchable area using 3x4 tie-plates 24" o.c. Center plate on stacked/dropped chord interface, plate length perpendicular to chord length. Splice top chord in notchable area using 3x6.

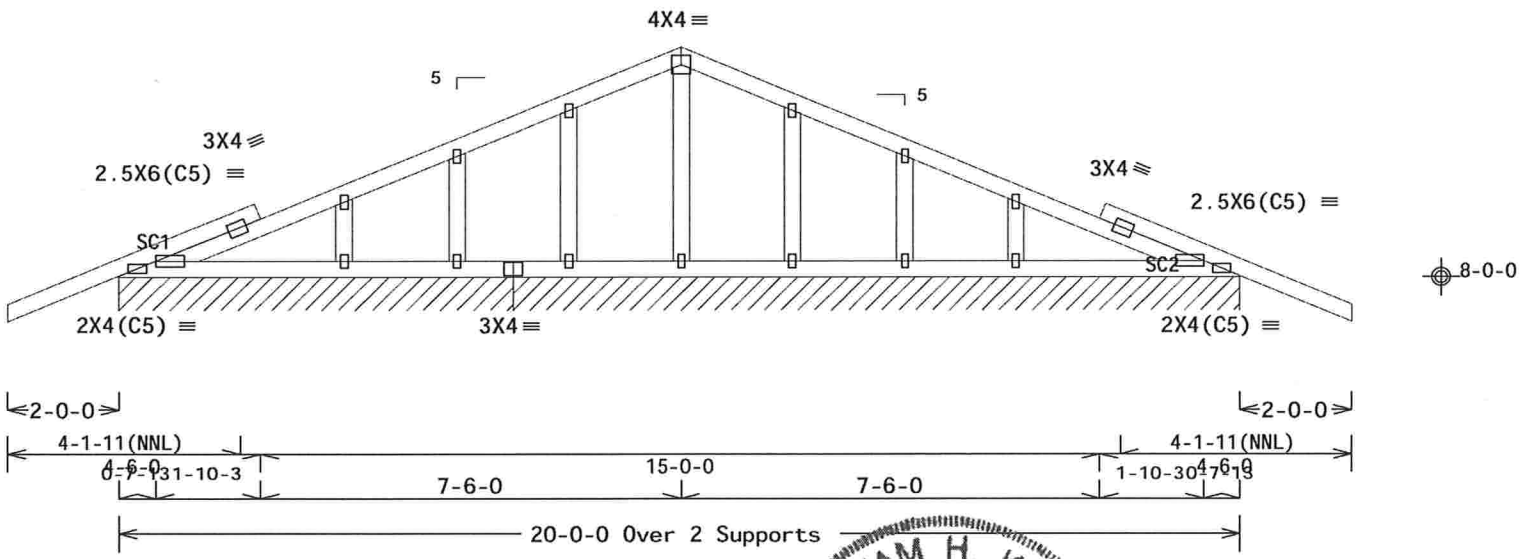

R=168 PLF U=18 PLF W=7-0-0
RL=16/-16 PLF R=165 PLF U=13 PLF W=13-0-0

Note: All Plates Are 1.5X3 Except As Shown.

Design Crit: FBC2010Res/TPI-2007(STD)

PLT TYP. Wave FT/RT=20%(0%)/10(0) 10.03.11.0209.19 QTY:1 FL/-/4/-/-/R/- Scale =.3125"/Ft.

ALPINE
ITW Building Components Group Inc.
Haines City, FL 33844
FL COA #0 278

WARNING READ AND FOLLOW ALL NOTES ON THIS SHEET!
IMPORTANT FURNISH THIS DESIGN TO ALL CONTRACTORS INCLUDING INSTALLERS.

Trusses require extreme care in fabricating, handling, shipping, installing and bracing. Refer to and follow the latest edition of BCSI (Building Component Safety Information, by TPI and WTCA) for safety practices prior to performing these functions. Installers shall provide temporary bracing per BCSI. Unless noted otherwise, top chord shall have properly attached structural sheathing and bottom chord shall have a properly attached rigid ceiling. Locations shown for permanent lateral restraint of webs shall have bracing installed per BCSI sections B3, B7 or B10, as applicable.

ITW Building Components Group Inc. (ITWBCG) shall not be responsible for any deviation from this design, any failure to build the truss in conformance with ANSI/TPI 1, or for handling, shipping, installation and bracing of trusses. Apply plates to each face of truss and position as shown above and on the Joint Details, unless noted otherwise. Refer to drawings 160A-Z for standard plate positions. A seal on this drawing or cover page listing this drawing, indicates acceptance of professional engineering responsibility solely for the design shown. The suitability and use of this design for any structure is the responsibility of the Building Designer per ANSI/TPI 1 Sec.2. For more information see: This job's general notes page; ITW-BCG: www.itwbcg.com; TPI: www.tpinst.org; WTCA: www.sbcindustry.com; ICC: www.iccsafe.org

WILLIAM H. KRICK LICENSE No. 70861 STATE OF FLORIDA PROFESSIONAL ENGINEER
03/18/2013

TC LL	20.0 PSF	REF	R487-- 85768
TC DL	7.0 PSF	DATE	03/18/13
BC DL	10.0 PSF	DRW	HCUSR487 13077014
BC LL	0.0 PSF	HC-ENG	WHK/WHK
TOT.LD.	37.0 PSF	SEQN-	52570
DUR.FAC.	1.25		
SPACING	24.0"	JREF-	1UUK487_Z01

THIS DWG PREPARED FROM COMPUTER INPUT (LOADS & DIMENSIONS) SUBMITTED BY TRUSS MFR.

(13-046B--Fill in later Taylor Model -- Mayfair Sub-Div - CG 20' Common Girder)

Top chord 2x4 SP_#1_12A
Bot chord 2x6 SP_#2_12A
Webs 2x4 SP_#3__12A :W3 2x4 SP_#1_12A:

Lumber grades designated with "12A" use design values approved 1/5/2012 by ALSC.

120 mph wind, 15.00 ft mean hgt, ASCE 7-10, CLOSED bldg, not located within 9.00 ft from roof edge, RISK CAT II, EXP C, wind TC DL=3.5 psf, wind BC DL=5.0 psf. GCpi(+/-)=0.18

Wind loads and reactions based on MWFRS.

Bottom chord checked for 10.00 psf non-concurrent live load.

Deflection meets L/240 live and L/180 total load. Creep increase factor for dead load is 1.50.

Special loads
------(Lumber Dur.Fac.=1.25 / Plate Dur.Fac.=1.25)
TC- From 55 plf at 0.00 to 55 plf at 10.00
TC- From 55 plf at 10.00 to 55 plf at 21.50
BC- From 10 plf at 0.00 to 10 plf at 12.94
BC- From 20 plf at 12.94 to 20 plf at 20.00
BC- From 4 plf at 20.00 to 4 plf at 21.50
BC- 122.70 lb Conc. Load at 0.94
BC- 151.34 lb Conc. Load at 2.94
BC- 41.37 lb Conc. Load at 4.94
BC- 159.10 lb Conc. Load at 6.94
BC- 206.51 lb Conc. Load at 8.94
BC- 213.78 lb Conc. Load at 10.94
BC- 2259.33 lb Conc. Load at 12.94

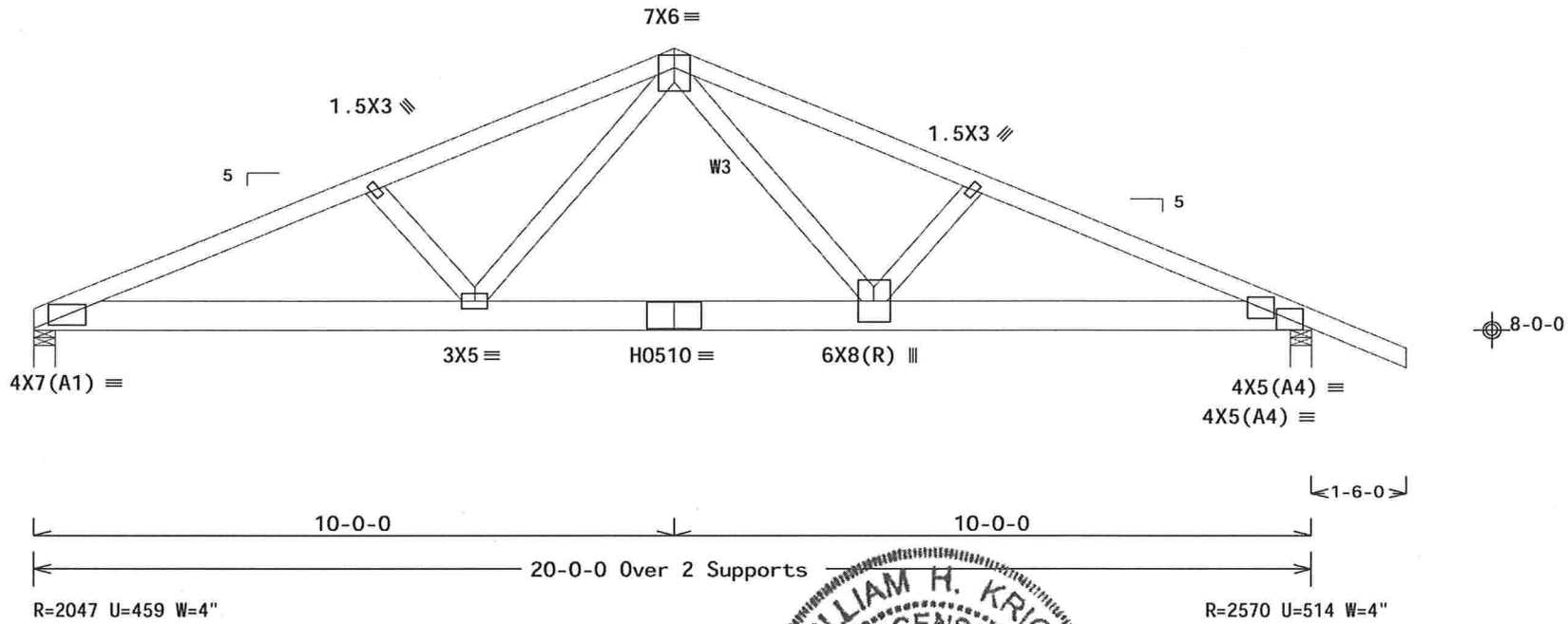

Design Crit: FBC2010Res/TPI-2007(STD)

PLT TYP. 20 Gauge HS,Wave FT/RT=20%(0%)/10(0) 10.03.11.0209.20 QTY:1 FL/-/4/-/-/R/- Scale =.375"/Ft.

ALPINE
ITW Building Components Group Inc.
Haines City, FL 33844
FL COA #0 278

WARNING READ AND FOLLOW ALL NOTES ON THIS SHEET!
IMPORTANT FURNISH THIS DESIGN TO ALL CONTRACTORS INCLUDING INSTALLERS.

Trusses require extreme care in fabricating, handling, shipping, installing and bracing. Refer to and follow the latest edition of BCSI (Building Component Safety Information, by TPI and WTCA) for safety practices prior to performing these functions. Installers shall provide temporary bracing per BCSI. Unless noted otherwise, top chord shall have properly attached structural sheathing and bottom chord shall have a properly attached rigid ceiling. Locations shown for permanent lateral restraint of webs shall have bracing installed per BCSI sections B3, B7 or B10, as applicable.

ITW Building Components Group Inc. (ITWBCG) shall not be responsible for any deviation from this design, any failure to build the truss in conformance with ANSI/TPI 1, or for handling, shipping, installation and bracing of trusses. Apply plates to each face of truss and position as shown above and on the Joint Details, unless noted otherwise. Refer to drawings 160A-Z for standard plate positions. A seal on this drawing or cover page listing this drawing, indicates acceptance of professional engineering responsibility solely for the design shown. The suitability and use of this design for any structure is the responsibility of the Building Designer per ANSI/TPI 1 Sec.2. For more information see: This job's general notes page; ITW-BCG: www.itwbcg.com; TPI: www.tpinst.org; WTCA: www.sbcindustry.com; ICC: www.iccsafe.org

WILLIAM H. KRICK LICENSE No. 70861 STATE OF FLORIDA PROFESSIONAL ENGINEER
03/18/2013

TC LL	20.0 PSF	REF	R487-- 85769
TC DL	7.0 PSF	DATE	03/18/13
BC DL	10.0 PSF	DRW	HCUSR487 13077015
BC LL	0.0 PSF	HC-ENG	WHK/WHK
TOT.LD.	37.0 PSF	SEQN-	69312
DUR.FAC.	1.25		
SPACING	24.0"	JREF-	1UUK487_Z01

(13-046B--Fill in later Taylor Model -- Mayfair Sub-Div - CJ1 1' Jack)

Top chord 2x4 SP_#1_12A
Bot chord 2x4 SP_#1_12A

Lumber grades designated with "12A" use design values approved 1/5/2012 by ALSC.

Bottom chord checked for 10.00 psf non-concurrent live load.

Provide (2) 16d common nails(0.162"x3.5"), toe nailed at Top chord.
Provide (2) 16d common nails(0.162"x3.5"), toe nailed at Bot chord.

120 mph wind, 15.00 ft mean hgt, ASCE 7-10, CLOSED bldg, Located anywhere in roof, RISK CAT II, EXP C, wind TC DL=3.5 psf, wind BC DL=5.0 psf. GCpi(+/-)=0.18

Wind loads and reactions based on MWFRS with additional C&C member design.

Deflection meets L/240 live and L/180 total load. Creep increase factor for dead load is 1.50.

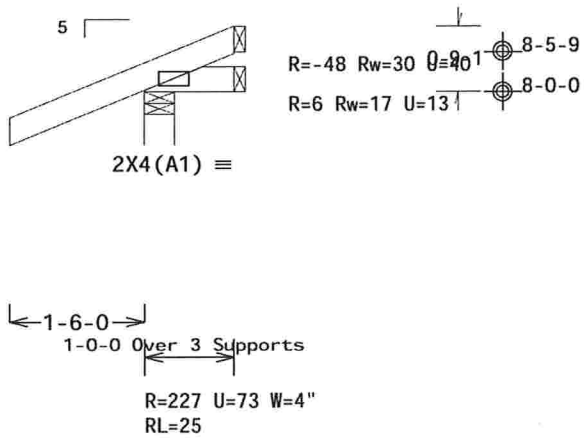

Design Crit: FBC2010Res/TPI-2007(STD)

PLT TYP. Wave | FT/RT=20%(0%)/10(0) | 10.03.11.0209.19 | QTY 6 | FL/-/4/-/-/R/- | Scale =.5"/Ft.

WILLIAM H. KRICK LICENSE No. 70861 STATE OF FLORIDA PROFESSIONAL ENGINEER
03/18/2013

ALPINE
ITW Building Components Group Inc.
Haines City, FL 33844
FL COA #0 278

WARNING READ AND FOLLOW ALL NOTES ON THIS SHEET!
IMPORTANT FURNISH THIS DESIGN TO ALL CONTRACTORS INCLUDING INSTALLERS.

Trusses require extreme care in fabricating, handling, shipping, installing and bracing. Refer to and follow the latest edition of BCSI (Building Component Safety Information, by TPI and WTCA) for safety practices prior to performing these functions. Installers shall provide temporary bracing per BCSI. Unless noted otherwise, top chord shall have properly attached structural sheathing and bottom chord shall have a properly attached rigid ceiling. Locations shown for permanent lateral restraint of web shall have bracing installed per BCSI sections B3, B7 or B10, as applicable.

ITW Building Components Group Inc. (ITWBCG) shall not be responsible for any deviation from this design, any failure to build the truss in conformance with ANSI/TPI 1, or for handling, shipping, installation and bracing of trusses. Apply plates to each face of truss and position as shown above and on the Joint Details, unless noted otherwise. Refer to drawings 160A-Z for standard plate positions. A seal on this drawing or cover page listing this drawing, indicates acceptance of professional engineering responsibility solely for the design shown. The suitability and use of this design for any structure is the responsibility of the Building Designer per ANSI/TPI 1 Sec.2. For more information see: This job's general notes page; ITW-BCG: www.itwbcg.com; TPI: www.tpinst.org; WTCA: www.sbcindustry.com; ICC: www.iccsafe.org

TC LL	20.0 PSF	REF	R487-- 85770
TC DL	7.0 PSF	DATE	03/18/13
BC DL	10.0 PSF	DRW	HCUSR487 13077016
BC LL	0.0 PSF	HC-ENG	WHK/WHK
TOT.LD.	37.0 PSF	SEQN-	52517
DUR.FAC.	1.25		
SPACING	24.0"	JREF-	1UUK487_Z01

(13-046B--Fill in later Taylor Model -- Mayfair Sub-Div - CJ3 3' Jack)

Top chord 2x4 SP_#1_12A
Bot chord 2x4 SP_#1_12A

Lumber grades designated with "12A" use design values approved 1/5/2012 by ALSC.

Bottom chord checked for 10.00 psf non-concurrent live load.

Provide (2) 16d common nails(0.162"x3.5"), toe nailed at Top chord.
Provide (2) 16d common nails(0.162"x3.5"), toe nailed at Bot chord.

120 mph wind, 15.00 ft mean hgt, ASCE 7-10, CLOSED bldg, Located anywhere in roof, RISK CAT II, EXP C, wind TC DL=3.5 psf, wind BC DL=5.0 psf. GCpi(+/-)=0.18

Wind loads and reactions based on MWFRS with additional C&C member design.

Deflection meets L/240 live and L/180 total load. Creep increase factor for dead load is 1.50.

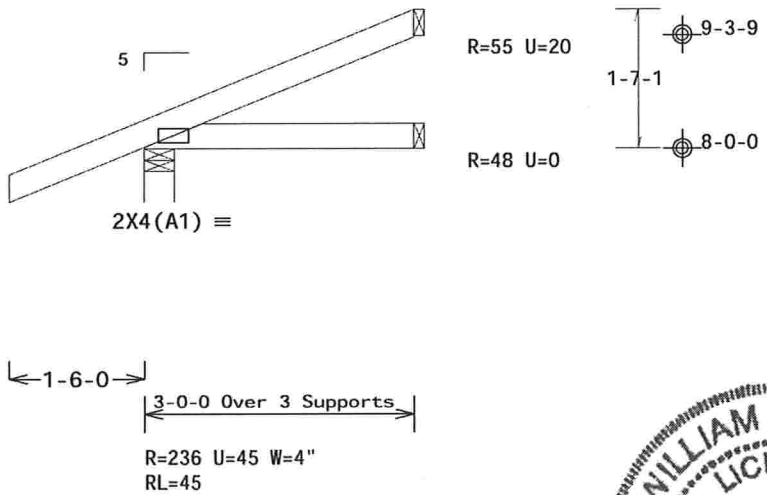

Design Crit: FBC2010Res/TPI-2007(STD)

PLT TYP. Wave FT/RT=20%(0%)/10(0) 10.03.11.0209.19 QTY 6 FL/-/4/-/-/R/- Scale =.5"/Ft.

ALPINE
ITW Building Components Group Inc.
Haines City, FL 33844
FL COA #0 278

WARNING READ AND FOLLOW ALL NOTES ON THIS SHEET!
IMPORTANT FURNISH THIS DESIGN TO ALL CONTRACTORS INCLUDING INSTALLERS.

Trusses require extreme care in fabricating, handling, shipping, installing and bracing. Refer to and follow the latest edition of BCSI (Building Component Safety Information, by TPI and WTCA) for safety practices prior to performing these functions. Installers shall provide temporary bracing per BCSI. Unless noted otherwise, top chord shall have properly attached structural sheathing and bottom chord shall have a properly attached rigid ceiling. Locations shown for permanent lateral restraint of webs shall have bracing installed per BCSI sections B3, B7 or B10, as applicable.

ITW Building Components Group Inc. (ITWBCG) shall not be responsible for any deviation from this design, any failure to build the truss in conformance with ANSI/TPI 1, or for handling, shipping, installation & bracing of trusses. Apply plates to each face of truss and position as shown above and on the Joint Details, unless noted otherwise. Refer to drawings 160A-Z for standard plate positions. A seal on this drawing or cover page listing this drawing, indicates acceptance of professional engineering responsibility solely for the design shown. The suitability and use of this design for any structure is the responsibility of the Building Designer per ANSI/TPI 1 Sec.2. For more information see: This job's general notes page; ITW-BCG: www.itwbcg.com; TPI: www.tpinst.org; WTCA: www.sbcindustry.com; ICC: www.iccsafe.org

WILLIAM H. KRICK LICENSE No. 70861 STATE OF FLORIDA PROFESSIONAL ENGINEER
03/18/2013

TC LL	20.0 PSF	REF	R487-- 85771
TC DL	7.0 PSF	DATE	03/18/13
BC DL	10.0 PSF	DRW	HCUSR487 13077017
BC LL	0.0 PSF	HC-ENG	WHK/WHK
TOT.LD.	37.0 PSF	SEQN-	52518
DUR.FAC.	1.25		
SPACING	24.0"	JREF-	1UUK487_Z01

THIS DWG PREPARED FROM COMPUTER INPUT (LOADS & DIMENSIONS) SUBMITTED BY TRUSS MFR.

(13-046B--Fill in later Taylor Model -- Mayfair Sub-Div - CJ5 5' Jack)

Top chord 2x4 SP_#1_12A
Bot chord 2x4 SP_#1_12A

Lumber grades designated with "12A" use design values approved 1/5/2012 by ALSC.

Bottom chord checked for 10.00 psf non-concurrent live load.

Provide (2) 16d common nails(0.162"x3.5"), toe nailed at Top chord.
Provide (2) 16d common nails(0.162"x3.5"), toe nailed at Bot chord.

120 mph wind, 15.00 ft mean hgt, ASCE 7-10, CLOSED bldg, not located within 4.50 ft from roof edge, RISK CAT II, EXP C, wind TC DL=3.5 psf, wind BC DL=5.0 psf. GCpi(+/-)=0.18

Wind loads and reactions based on MWFRS with additional C&C member design.

Deflection meets L/240 live and L/180 total load. Creep increase factor for dead load is 1.50.

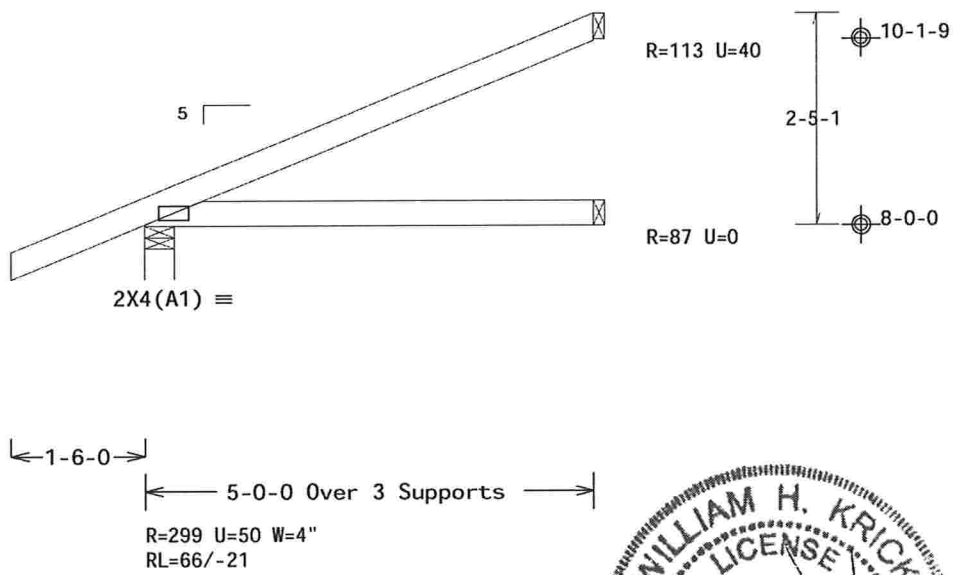

Design Crit: FBC2010Res/TPI-2007(STD)
FT/RT=20%(0%)/10(0) 10.03.11.0209.19 QTY:6 FL/-/4/-/-/R/-

PLT TYP. Wave

Scale =.5"/Ft.

ALPINE
ITW Building Components Group Inc.
Haines City, FL 33844
FL COA #0 278

WARNING READ AND FOLLOW ALL NOTES ON THIS SHEET!
IMPORTANT FURNISH THIS DESIGN TO ALL CONTRACTORS INCLUDING INSTALLERS.

Trusses require extreme care in fabricating, handling, shipping, installing and bracing. Refer to and follow the latest edition of BCSI (Building Component Safety Information, by TPI and WTCA) for safety practices prior to performing these functions. Installers shall provide temporary bracing per BCSI. Unless noted otherwise, top chord shall have properly attached structural sheathing and bottom chord shall have a properly attached rigid ceiling. Locations shown for permanent lateral restraint of web shall have bracing installed per BCSI sections B3, B7 or B10, as applicable.

ITW Building Components Group Inc. (ITWBCG) shall not be responsible for any deviation from this design, any failure to build the truss in conformance with ANSI/TPI 1, or for handling, shipping, installation and bracing of trusses. Apply plates to each face of truss and position as shown above and on the Joint Details, unless noted otherwise. Refer to drawings 160A-Z for standard plate positions. A seal on this drawing or cover page listing this drawing, indicates acceptance of professional engineering responsibility solely for the design shown. The suitability and use of this design for any structure is the responsibility of the Building Designer per ANSI/TPI 1 Sec.2. For more information see: This job's general notes page; ITW-BCG: www.itwbcg.com; TPI: www.tpinst.org; WTCA: www.sbcindustry.com; ICC: www.iccsafe.org

WILLIAM H. KRICK
LICENSE
No. 70861
STATE OF FLORIDA
PROFESSIONAL ENGINEER
03/18/2013

TC LL	20.0 PSF	REF	R487-- 85772
TC DL	7.0 PSF	DATE	03/18/13
BC DL	10.0 PSF	DRW	HCUSR487 13077018
BC LL	0.0 PSF	HC-ENG	WHK/WHK
TOT.LD.	37.0 PSF	SEQN-	52519
DUR.FAC.	1.25		
SPACING	24.0"	JREF-	1UUK487_Z01

THIS DWG PREPARED FROM COMPUTER INPUT (LOADS & DIMENSIONS) SUBMITTED BY TRUSS MFR.

(13-046B--Fill in later Taylor Model -- Mayfair Sub-Div - DDG 15' Gable)

Top chord 2x4 SP_#1_12A
Bot chord 2x4 SP_#1_12A
Webs 2x4 SP_#3__12A
:Stack Chord SC1 2x4 SP_#1_12A::Stack Chord SC2 2x4 SP_#1_12A:

Lumber grades designated with "12A" use design values approved 1/5/2012 by ALSC.

Stacked top chord must NOT be notched or cut in area (NNL). Dropped top chord braced at 24" o.c. intervals. Attach stacked top chord (SC) to dropped top chord in notchable area using 3x4 tie-plates 24" o.c. Center plate on stacked/dropped chord interface, plate length perpendicular to chord length. Splice top chord in notchable area using 3x6.

120 mph wind, 15.00 ft mean hgt, ASCE 7-10, CLOSED bldg, Located anywhere in roof, RISK CAT II, EXP C, wind TC DL=3.5 psf, wind BC DL=5.0 psf. GCpi(+/-)=0.18

Wind loads and reactions based on MWFRS with additional C&C member design.

See DWGS A12015ENC100212, GBLLETIN0212, & GABRST100212 for more requirements.

In lieu of structural panels use purlins to brace TC @ 24" OC.

Bottom chord checked for 10.00 psf non-concurrent live load.

Deflection meets L/240 live and L/180 total load. Creep increase factor for dead load is 1.50.

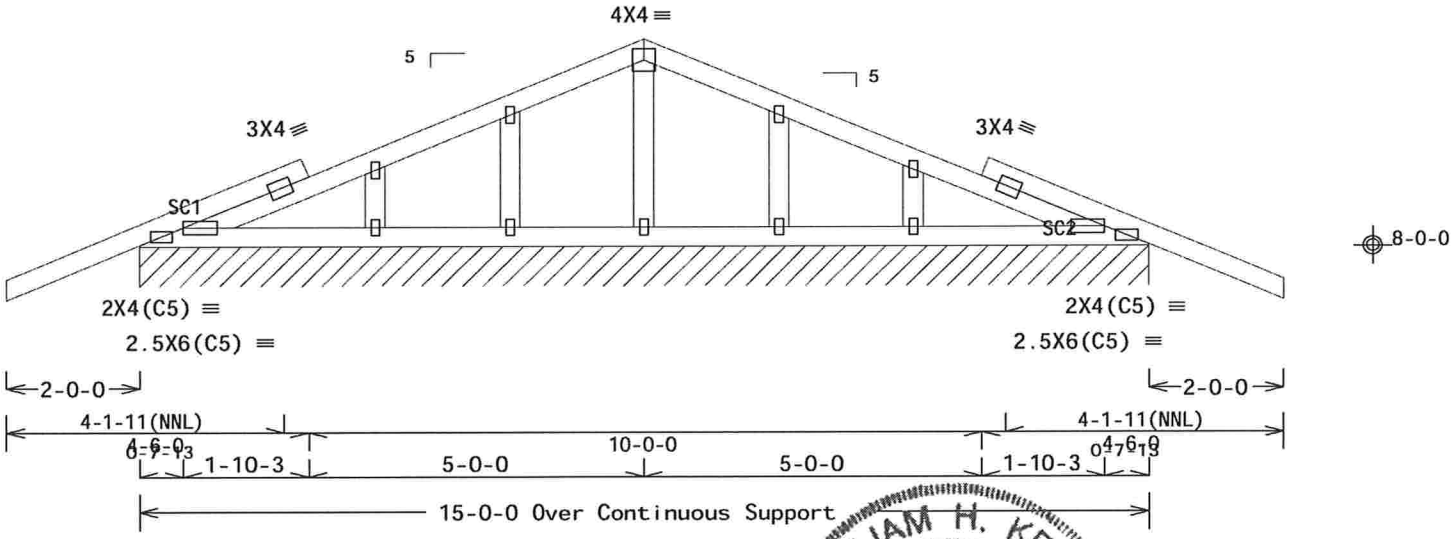

R=168 PLF U=15 PLF W=15-0-0
RL=6/-6 PLF

Note: All Plates Are 1.5X3 Except As Shown.

Design Crit: FBC2010Res/TPI-2007(STD)

PLT TYP. Wave | FT/RT=20%(0%)/10(0) | 10.03.11.0209.19 | QTY 1 | FL/-/4/-/-/R/- | Scale =.375"/Ft.

WILLIAM H. KRICK LICENSE No. 70861 STATE OF FLORIDA PROFESSIONAL ENGINEER

03/18/2013

ALPINE
ITW Building Components Group Inc.
Haines City, FL 33844
FL COA #0 278

WARNING READ AND FOLLOW ALL NOTES ON THIS SHEET!
IMPORTANT FURNISH THIS DESIGN TO ALL CONTRACTORS INCLUDING INSTALLERS.

Trusses require extreme care in fabricating, handling, shipping, installing and bracing. Refer to and follow the latest edition of BCSI (Building Component Safety Information, by TPI and WTCA) for general practices prior to performing these functions. Installers shall provide temporary bracing per BCSI. Unless noted otherwise, top chord shall have properly attached structural sheathing and bottom chord shall have a properly attached rigid ceiling. Locations shown for permanent lateral restraint of webs shall have bracing installed per BCSI sections B3, B7 or B10, as applicable.

ITW Building Components Group Inc. (ITWBCG) shall not be responsible for any deviation from this design, any failure to build the truss in conformance with ANSI/TPI 1, or for handling, shipping, installation and bracing of trusses. Apply plates to each face of truss and position as shown above and on the Joint Details, unless noted otherwise. Refer to drawings 160A-Z for standard plate positions. A seal on this drawing or cover page listing this drawing, indicates acceptance of professional engineering responsibility solely for the design shown. The suitability and use of this design for any structure is the responsibility of the Building Designer per ANSI/TPI 1 Sec.2. For more information see: This job's general notes page; ITW-BCG: www.itwbcg.com; TPI: www.tpinst.org; WTCA: www.sbcindustry.com; ICC: www.iccsafe.org

TC LL	20.0 PSF	REF	R487-- 85773
TC DL	7.0 PSF	DATE	03/18/13
BC DL	10.0 PSF	DRW	HCUSR487 13077019
BC LL	0.0 PSF	HC-ENG	WHK/WHK
TOT.LD.	37.0 PSF	SEQN-	52574
DUR.FAC.	1.25		
SPACING	24.0"	JREF-	1UUK487_Z01

THIS DWG PREPARED FROM COMPUTER INPUT (LOADS & DIMENSIONS) SUBMITTED BY TRUSS MFR.

(13-046B--Fill in later Taylor Model -- Mayfair Sub-Div - EJ7 7' End Jack)

Top chord 2x4 SP_#1_12A
Bot chord 2x4 SP_#1_12A

Lumber grades designated with "12A" use design values approved 1/5/2012 by ALSC.

(T1) = (J) Tie not calculated Unavailable
(T2) = (J) Tie not calculated Unavailable

Deflection meets L/240 live and L/180 total load. Creep increase factor for dead load is 1.50.

120 mph wind, 15.00 ft mean hgt, ASCE 7-10, CLOSED bldg, not located within 4.50 ft from roof edge, RISK CAT II, EXP C, wind TC DL=3.5 psf, wind BC DL=5.0 psf. GCpi(+/-)=0.18

Wind loads and reactions based on MWFRS with additional C&C member design.

Bottom chord checked for 10.00 psf non-concurrent live load.

Provide (2) 16d common nails(0.162"x3.5"), toe nailed at Top chord.
Provide (2) 16d common nails(0.162"x3.5"), toe nailed at Bot chord.

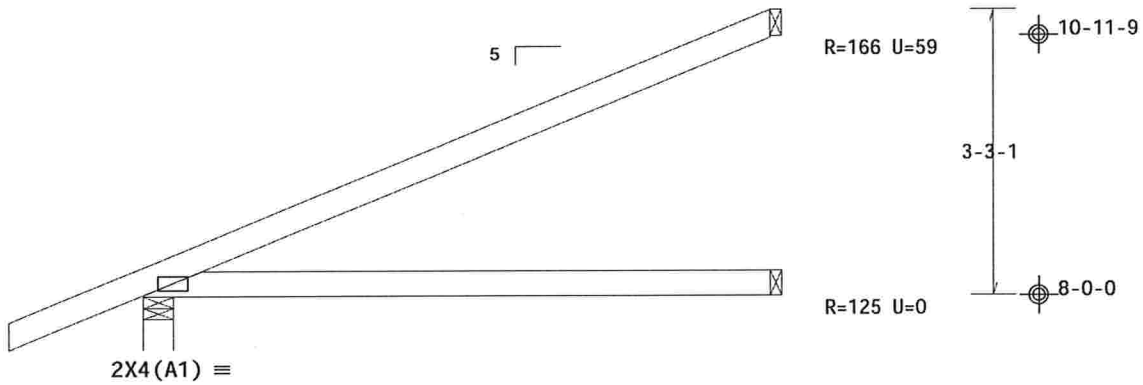

1-6-0

7-0-0 Over 3 Supports

R=370 U=57 W=4"
RL=86/-24

Design Crit: FBC2010Res/TPI-2007(STD)
FT/RT=20%(0%)/10(0)

PLT TYP. Wave

10.03.11.02.09.19 QTY=19 FL/-/4/-/-/R/- Scale =.5"/Ft.

WILLIAM H. KRICK LICENSE No. 70861 STATE OF FLORIDA PROFESSIONAL ENGINEER
03/18/2013

ALPINE
ITW Building Components Group Inc.
Haines City, FL 33844
FL COA #0 278

WARNING READ AND FOLLOW ALL NOTES ON THIS SHEET!
IMPORTANT FURNISH THIS DESIGN TO ALL CONTRACTORS INCLUDING INSTALLERS.

Trusses require extreme care in fabricating, handling, shipping, installing and bracing. Refer to and follow the latest edition of BCSI (Building Component Safety Information, by TPI and WTCA) for safety practices prior to performing these functions. Installers shall provide temporary bracing per BCSI. Unless noted otherwise, top chord shall have properly attached structural sheathing and bottom chord shall have a properly attached rigid ceiling. Locations shown for permanent lateral restraint of webs shall have bracing installed per BCSI sections B3, B7 or B10, as applicable.

ITW Building Components Group Inc. (ITWBCG) shall not be responsible for any deviation from this design, any failure to build the truss in conformance with ANSI/TPI 1, or for handling, shipping, installation & bracing of trusses. Apply plates to each face of truss and position as shown above and on the Joint Details, unless noted otherwise. Refer to drawings 160A-Z for standard plate positions. A seal on this drawing or cover page listing this drawing, indicates acceptance of professional engineering responsibility solely for the design shown. The suitability and use of this design for any structure is the responsibility of the Building Designer per ANSI/TPI 1 Sec.2. For more information see: This job's general notes page; ITW-BCG: www.itwbcg.com; TPI: www.tpinst.org; WTCA: www.sbcindustry.com; ICC: www.iccsafe.org

TC LL	20.0 PSF	REF	R487-- 85774
TC DL	7.0 PSF	DATE	03/18/13
BC DL	10.0 PSF	DRW	HCUSR487 13077020
BC LL	0.0 PSF	HC-ENG	WHK/WHK
TOT.LD.	37.0 PSF	SEQN-	52492
DUR.FAC.	1.25		
SPACING	24.0"	JREF-	1UUK487_Z01

THIS DWG PREPARED FROM COMPUTER INPUT (LOADS & DIMENSIONS) SUBMITTED BY TRUSS MFR.

(13-046B--Fill in later Taylor Model -- Mayfair Sub-Div - H11A 31'8" Stepdown Hip)

Top chord 2x4 SP_#1_12A
Bot chord 2x4 SP_#1_12A
Webs 2x4 SP_#3__12A

Lumber grades designated with "12A" use design values approved 1/5/2012 by ALSC.

H = recommended connection based on manufacturer tested capacities and calculations. Conditions may exist that require different connections than indicated. Refer to manufacturer publication for additional information.

These support conditions used at bearings indicated
(H1) = Simpson LUS26 w/ (1)2x6 SP M-26 supporting member.
(4) 0.148"x3" nails into supporting member,
(3) 0.148"x3" nails into supported member.

MWFRS loads based on trusses located at least 7.50 ft. from roof edge.

120 mph wind, 15.00 ft mean hgt, ASCE 7-10, CLOSED bldg, not located within 9.00 ft from roof edge, RISK CAT II, EXP C, wind TC DL=3.5 psf, wind BC DL=5.0 psf. GCpi(+/-)=0.18

Wind loads and reactions based on MWFRS with additional C&C member design.

Hanger specified assumes connection to supporting chord is located a minimum of five times the depth of the supporting chord from any unsupported end, unless unsupported chord end has 85% plating coverage.

Bottom chord checked for 10.00 psf non-concurrent live load.

Deflection meets L/240 live and L/180 total load. Creep increase factor for dead load is 1.50.

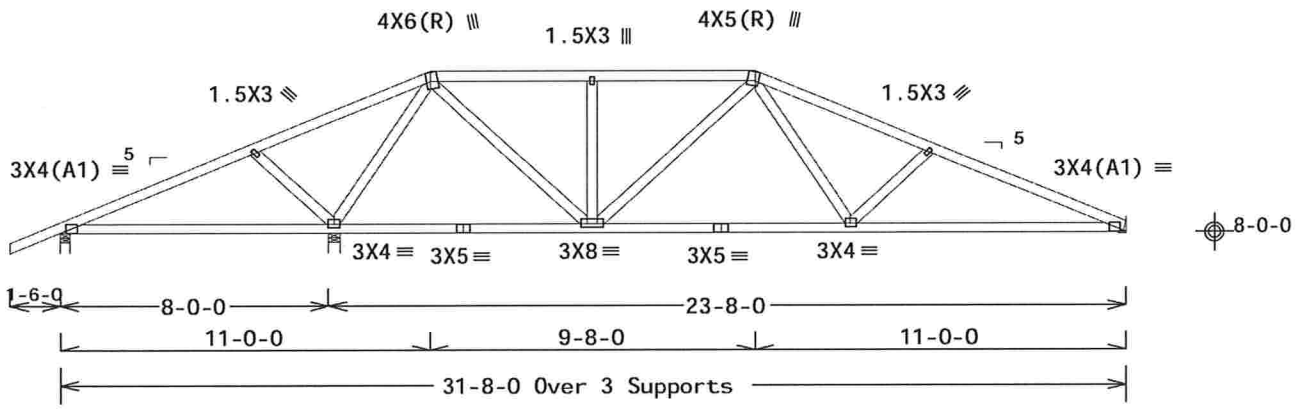

R=308 U=41 W=3.5"
RL=99/-105

R=1439 U=250 W=4"

R=825 U=135 H=Simpson LUS26
Supported Member Face: (3) 0.148"x3" nails
Supporting Member Face: (4) 0.148"x3" nails
Supporting Member : (1) 2x6 SP M-26

Design Crit: FBC2010Res/TPI-2007(STD)
FT/RT=20%(0%)/10(0)

PLT TYP. Wave

10.03.11.0209.20 QTY:1 FL/-/4/-/-/R/- Scale =.1875"/Ft.

WILLIAM H. KADY LICENSED No. 70861 STATE OF FLORIDA PROFESSIONAL ENGINEER
03/18/2013

ALPINE
ITW Building Components Group Inc.
Haines City, FL 33844
FL COA #0 278

WARNING READ AND FOLLOW ALL NOTES ON THIS SHEET!
IMPORTANT FURNISH THIS DESIGN TO ALL CONTRACTORS INCLUDING INSTALLERS.

Trusses require extreme care in fabricating, handling, shipping, installing and bracing. Refer to and follow the latest edition of BCSI (Building Component Safety Information, by TPI and WTCA) for safety practices prior to performing these functions. Installers shall provide temporary bracing per BCSI. Unless noted otherwise, top chord shall have properly attached structural sheathing and bottom chord shall have a properly attached rigid ceiling. Locations shown for permanent lateral restraint of webs shall have bracing installed per BCSI sections B3, B7 or B10, as applicable.

ITW Building Components Group Inc. (ITWBCG) shall not be responsible for any deviation from this design, any failure to build the truss in conformance with ANSI/TPI 1, or for handling, shipping, installation and bracing of trusses. Apply plates to each face of truss and position as shown above and on the Joint Details, unless noted otherwise. Refer to drawings 160A-Z for standard plate positions. A seal on this drawing or cover page listing this drawing, indicates acceptance of professional engineering responsibility solely for the design shown. The suitability and use of this design for any structure is the responsibility of the Building Designer per ANSI/TPI 1 Sec.2. For more information see: This job's general notes page; ITW-BCG: www.itwbcg.com; TPI: www.tpinst.org; WTCA: www.sbcindustry.com; ICC: www.iccsafe.org

TC LL	20.0 PSF	REF	R487-- 85775
TC DL	7.0 PSF	DATE	03/18/13
BC DL	10.0 PSF	DRW	HCUSR487 13077021
BC LL	0.0 PSF	HC-ENG	WHK/WHK
TOT.LD.	37.0 PSF	SEQN-	69290
DUR.FAC.	1.25		
SPACING	24.0"	JREF-	1UUK487_Z01

THIS DWG PREPARED FROM COMPUTER INPUT (LOADS & DIMENSIONS) SUBMITTED BY TRUSS MFR.

(13-046B--Fill in later Taylor Model -- Mayfair Sub-Div - H11AM 23'6"8 Stepdown Hip)

Top chord 2x4 SP_#1_12A
Bot chord 2x4 SP_#1_12A
Webs 2x4 SP_#3__12A

Lumber grades designated with "12A" use design values approved 1/5/2012 by ALSC.

H = recommended connection based on manufacturer tested capacities and calculations. Conditions may exist that require different connections than indicated. Refer to manufacturer publication for additional information.

(H1) = (J) Hanger not calculated (1)2x6 SP_#2_12A supporting member.

Bottom chord checked for 10.00 psf non-concurrent live load.

MWFRS loads based on trusses located at least 7.50 ft. from roof edge.

120 mph wind, 15.00 ft mean hgt, ASCE 7-10, CLOSED bldg, not located within 9.00 ft from roof edge, RISK CAT II, EXP C, wind TC DL=3.5 psf, wind BC DL=5.0 psf. GCpi(+/-)=0.18

Wind loads and reactions based on MWFRS with additional C&C member design.

Right end vertical not exposed to wind pressure.

Hanger specified assumes connection to supporting chord is located a minimum of five times the depth of the supporting chord from any unsupported end, unless unsupported chord end has 85% plating coverage.

(a) Continuous lateral bracing equally spaced on member.

Deflection meets L/240 live and L/180 total load. Creep increase factor for dead load is 1.50.

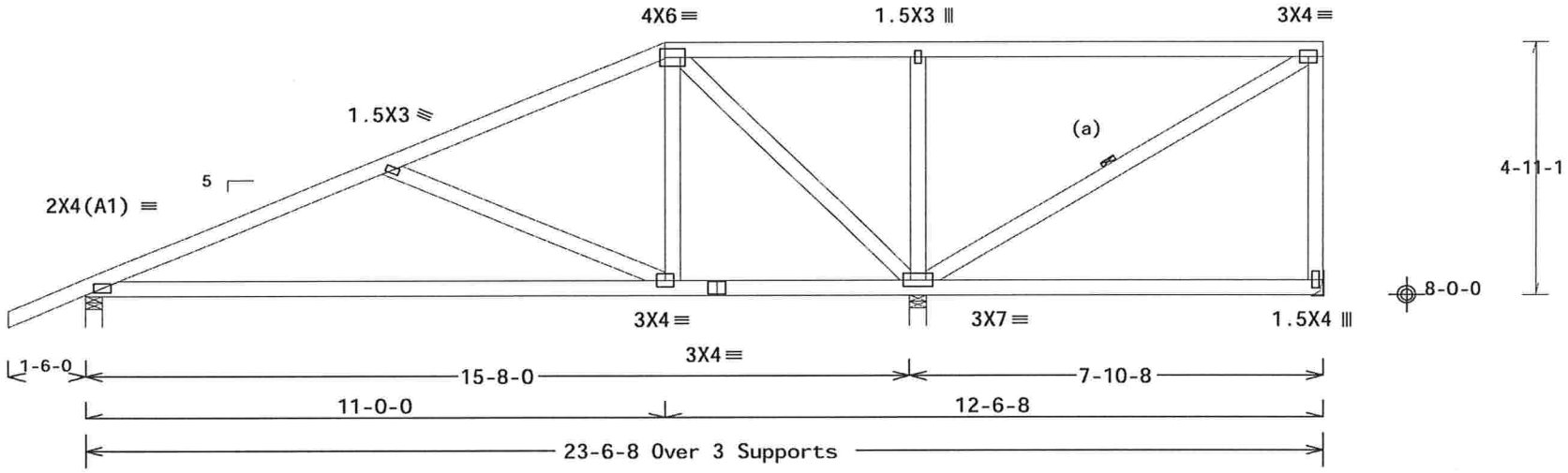

R=1122 U=231 W=4"

R=207 U=31 H=Simpson LUS24
Supported Member Face: (2) 0.148"x3" nails
Supporting Member Face: (4) 0.148"x3" nails
Supporting Member : (1) 2x6 SP_#2_12A

R=626 U=89 W=4"
RL=127/-28

Design Crit: FBC2010Res/TPI-2007(STD)
FT/RT=20%(0%)/10(0) 10.03.11.0209.20 QTY:1 FL/-/4/-/-/R/-

PLT TYP. Wave

Scale =.3125"/Ft.

WILLIAM H. KRICK LICENSE No. 70861 STATE OF FLORIDA PROFESSIONAL ENGINEER
03/18/2013

ALPINE
ITW Building Components Group Inc.
Haines City, FL 33844
FL COA #0 278

WARNING READ AND FOLLOW ALL NOTES ON THIS SHEET!
IMPORTANT FURNISH THIS DESIGN TO ALL CONTRACTORS INCLUDING INSTALLERS.

Trusses require extreme care in fabricating, handling, shipping, installing and bracing. Refer to and follow the latest edition of BCSI (Building Component Safety Information, by TPI and WTCA) for safety practices prior to performing these functions. Installers shall provide temporary bracing per BCSI. Unless noted otherwise, top chord shall have properly attached structural sheathing and bottom chord shall have a properly attached rigid ceiling. Locations shown for permanent lateral restraint shall have bracing installed per BCSI sections B3, B7 or B10, as applicable.

ITW Building Components Group Inc. (ITWBCG) shall not be responsible for any deviation from this design, any failure to build the truss in conformance with ANSI/TPI 1, or for handling, shipping, installation and bracing of trusses. Apply plates to each face of truss and position as shown above and on the Joint Details, unless noted otherwise. Refer to drawings 160A-Z for standard plate positions. A seal on this drawing or cover page listing this drawing, indicates acceptance of professional engineering responsibility solely for the design shown. The suitability and use of this design for any structure is the responsibility of the Building Designer per ANSI/TPI 1 Sec.2. For more information see: This job's general notes page; ITW-BCG: www.itwbcg.com; TPI: www.tpinst.org; WTCA: www.sbcindustry.com; ICC: www.iccsafe.org

TC LL	20.0 PSF	REF	R487-- 85776
TC DL	7.0 PSF	DATE	03/18/13
BC DL	10.0 PSF	DRW	HCUSR487 13077022
BC LL	0.0 PSF	HC-ENG	WHK/WHK
TOT.LD.	37.0 PSF	SEQN-	69135
DUR.FAC.	1.25		
SPACING	24.0"	JREF-	1UUK487_Z01

THIS DWG PREPARED FROM COMPUTER INPUT (LOADS & DIMENSIONS) SUBMITTED BY TRUSS MFR.

(13-046B--Fill in later Taylor Model -- Mayfair Sub-Div - H13AM 23'6"8 Stepdown Hip)

Top chord 2x4 SP_#1_12A
Bot chord 2x4 SP_#1_12A
Webs 2x4 SP_#3__12A

Lumber grades designated with "12A" use design values approved 1/5/2012 by ALSC.

H = recommended connection based on manufacturer tested capacities and calculations. Conditions may exist that require different connections than indicated. Refer to manufacturer publication for additional information.

Bottom chord checked for 10.00 psf non-concurrent live load.

MWFRS loads based on trusses located at least 7.50 ft. from roof edge.

120 mph wind, 15.00 ft mean hgt, ASCE 7-10, CLOSED bldg, not located within 9.00 ft from roof edge, RISK CAT II, EXP C, wind TC DL=3.5 psf, wind BC DL=5.0 psf. GCpi(+/-)=0.18

Wind loads and reactions based on MWFRS with additional C&C member design.

Right end vertical not exposed to wind pressure.

Hanger specified assumes connection to supporting chord is located a minimum of five times the depth of the supporting chord from any unsupported end, unless unsupported chord end has 85% plating coverage.

(a) Continuous lateral bracing equally spaced on member.

Deflection meets L/240 live and L/180 total load. Creep increase factor for dead load is 1.50.

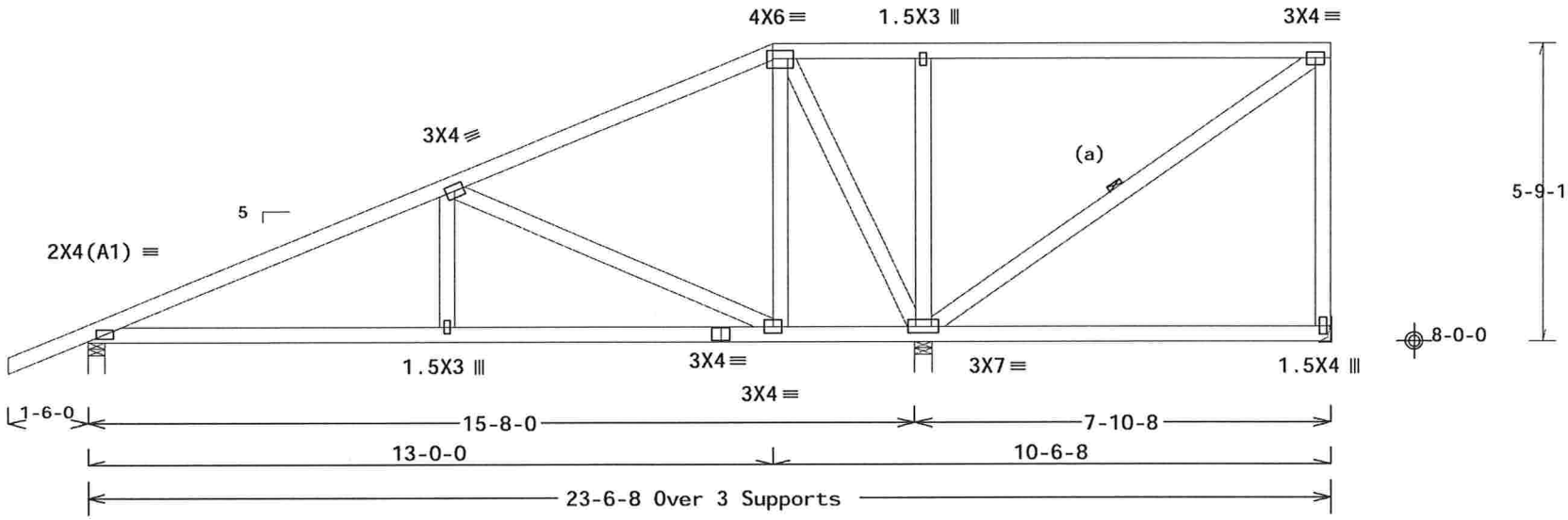

R=1206 U=228 W=4"

R=159 U=42 H=Simpson LUS24
Supported Member Face: (2) 0.148"x3" nails
Supporting Member Face: (4) 0.148"x3" nails
Supporting Member : (1) 2x6 SP_#2_12A

R=600 U=84 W=4"
RL=147/-31

Design Crit: FBC2010Res/TPI-2007(STD)

PLT TYP. Wave | FT/RT=20%(0%)/10(0) | 10.03.11.0209 20 | QTY:1 | FL/-/4/-/-/R/- | Scale =.3125"/Ft.

ALPINE
ITW Building Components Group Inc.
Haines City, FL 33844
FL COA #0 278

WARNING READ AND FOLLOW ALL NOTES ON THIS SHEET!
IMPORTANT FURNISH THIS DESIGN TO ALL CONTRACTORS INCLUDING INSTALLERS.

Trusses require extreme care in fabricating, handling, shipping, installing and bracing. Refer to and follow the latest edition of BCSI (Building Component Safety Information, by TPI and WTCA) for safety practices prior to performing these functions. Installers shall provide temporary bracing per BCSI. Unless noted otherwise, top chord shall have properly attached structural sheathing and bottom chord shall have a properly attached rigid ceiling. Locations shown for permanent lateral restraint of webs shall have bracing installed per BCSI sections B3, B7 or B10, as applicable.

ITW Building Components Group Inc. (ITWBCG) shall not be responsible for any deviation from this design, any failure to build the truss in conformance with ANSI/TPI 1, or for handling, shipping, installation & bracing of trusses. Apply plates to each face of truss and position as shown above and on the Joint Details, unless noted otherwise. Refer to drawings 160A-Z for standard plate positions. A seal on this drawing or cover page listing this drawing, indicates acceptance of professional engineering responsibility solely for the design shown. The suitability and use of this design for any structure is the responsibility of the Building Designer per ANSI/TPI 1 Sec.2. For more information see: This job's general notes page; ITW-BCG: www.itwbcg.com; TPI: www.tpinst.org; WTCA: www.sbcindustry.com; ICC: www.iccsafe.org

WILLIAM H. KRICK LICENSE No. 70861 STATE OF FLORIDA PROFESSIONAL ENGINEER
03/18/2013

TC LL	20.0 PSF	REF	R487-- 85777
TC DL	7.0 PSF	DATE	03/18/13
BC DL	10.0 PSF	DRW	HCUSR487 13077023
BC LL	0.0 PSF	HC-ENG	WHK/WHK
TOT.LD.	37.0 PSF	SEQN-	69139
DUR.FAC.	1.25		
SPACING	24.0"	JREF-	1UUK487_Z01

THIS DWG PREPARED FROM COMPUTER INPUT (LOADS & DIMENSIONS) SUBMITTED BY TRUSS MFR.

(13-046B--Fill in later Taylor Model -- Mayfair Sub-Div - H13AV 31'8" Stepdown Hip)

Top chord 2x4 SP_#1_12A
Bot chord 2x4 SP_#1_12A
Webs 2x4 SP_#3__12A :W8 2x4 SP_#1_12A:

Lumber grades designated with "12A" use design values approved 1/5/2012 by ALSC.

Right cantilever is exposed to wind

Deflection meets L/240 live and L/180 total load. Creep increase factor for dead load is 1.50.

120 mph wind, 15.00 ft mean hgt, ASCE 7-10, CLOSED bldg, not located within 9.00 ft from roof edge, RISK CAT II, EXP C, wind TC DL=3.5 psf, wind BC DL=5.0 psf. GCpi(+/-)=0.18

Wind loads and reactions based on MWFRS with additional C&C member design.

Bottom chord checked for 10.00 psf non-concurrent live load.

MWFRS loads based on trusses located at least 7.50 ft. from roof edge.

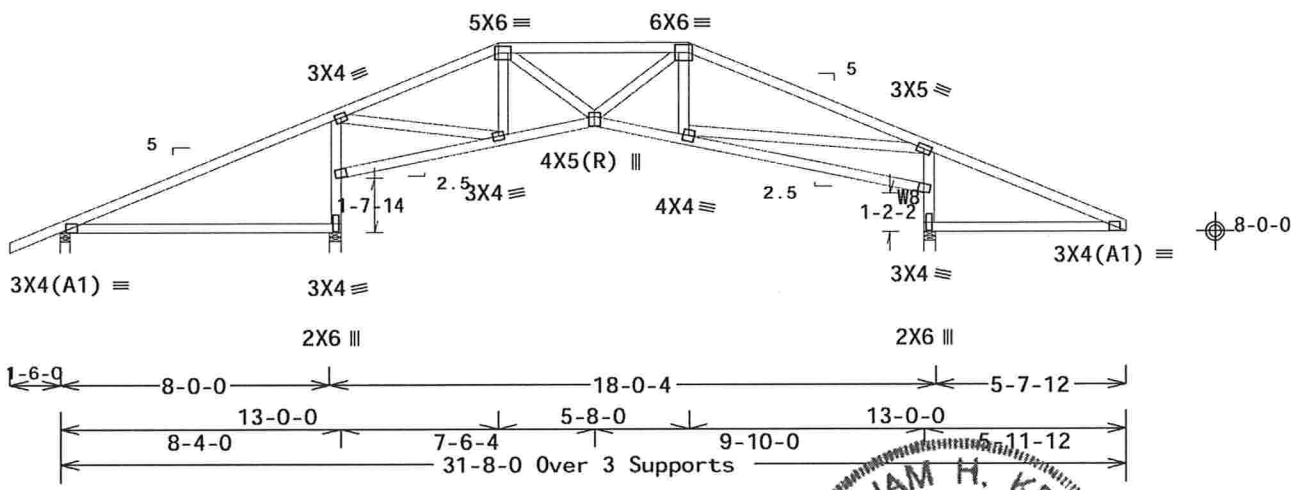

Design Crit: FBC2010Res/TPI-2007(STD)
FT/RT=20%(0%)/10(0)

PLT TYP. Wave

10.03.11.0209.20 QTY 1 FL/-/4/-/-/R/- Scale =.1875"/Ft.

WILLIAM H. KRICK LICENSE No. 70861 STATE OF FLORIDA PROFESSIONAL ENGINEER
03/18/2013

ALPINE
ITW Building Components Group Inc.
Haines City, FL 33844
FL COA #0 278

WARNING READ AND FOLLOW ALL NOTES ON THIS SHEET!
IMPORTANT FURNISH THIS DESIGN TO ALL CONTRACTORS INCLUDING INSTALLERS.

Trusses require extreme care in fabricating, handling, shipping, installing and bracing. Refer to and follow the latest edition of BCSI (Building Component Safety Information, by TPI and WTCA) for safety practices prior to performing these functions. Installers shall provide temporary bracing per BCSI. Unless noted otherwise, top chord shall have properly attached structural sheathing and bottom chord shall have a properly attached rigid ceiling. Locations shown for permanent lateral restraint of webs shall have bracing installed per BCSI sections B3, B7 or B10, as applicable.

ITW Building Components Group Inc. (ITWBCG) shall not be responsible for any deviation from this design, any failure to build the truss in conformance with ANSI/TPI 1, or for handling, shipping, installation and bracing of trusses. Apply plates to each face of truss and position as shown above and on the Joint Details, unless noted otherwise. Refer to drawings 160A-Z for standard plate positions. A seal on this drawing or cover page listing this drawing, indicates acceptance of professional engineering responsibility solely for the design shown. The suitability and use of this design for any structure is the responsibility of the Building Designer per ANSI/TPI 1 Sec.2. For more information see: This job's general notes page; ITW-BCG: www.itwbcg.com; TPI: www.tpinst.org; WTCA: www.sbcindustry.com; ICC: www.iccsafe.org

TC LL	20.0 PSF	REF	R487-- 85778
TC DL	7.0 PSF	DATE	03/18/13
BC DL	10.0 PSF	DRW	HCUSR487 13077024
BC LL	0.0 PSF	HC-ENG	WHK/WHK
TOT.LD.	37.0 PSF	SEQN-	69286
DUR.FAC.	1.25		
SPACING	24.0"	JREF-	1UUK487_Z01

THIS DWG PREPARED FROM COMPUTER INPUT (LOADS & DIMENSIONS) SUBMITTED BY TRUSS MFR.

(13-046B--Fill in later Taylor Model -- Mayfair Sub-Div - H15AM 23'6"8 Stepdown Hip)

Top chord 2x4 SP_#1_12A
Bot chord 2x4 SP_#1_12A
Webs 2x4 SP_#3__12A

Lumber grades designated with "12A" use design values approved 1/5/2012 by ALSC.

H = recommended connection based on manufacturer tested capacities and calculations. Conditions may exist that require different connections than indicated. Refer to manufacturer publication for additional information.

Bottom chord checked for 10.00 psf non-concurrent live load.

MWFRS loads based on trusses located at least 15.00 ft. from roof edge.

120 mph wind, 15.00 ft mean hgt, ASCE 7-10, CLOSED bldg, not located within 9.00 ft from roof edge, RISK CAT II, EXP C, wind TC DL=3.5 psf, wind BC DL=5.0 psf. GCpi(+/-)=0.18

Wind loads and reactions based on MWFRS with additional C&C member design.

Right end vertical not exposed to wind pressure.

Hanger specified assumes connection to supporting chord is located a minimum of five times the depth of the supporting chord from any unsupported end, unless unsupported chord end has 85% plating coverage.

(a) Continuous lateral bracing equally spaced on member.

Deflection meets L/240 live and L/180 total load. Creep increase factor for dead load is 1.50.

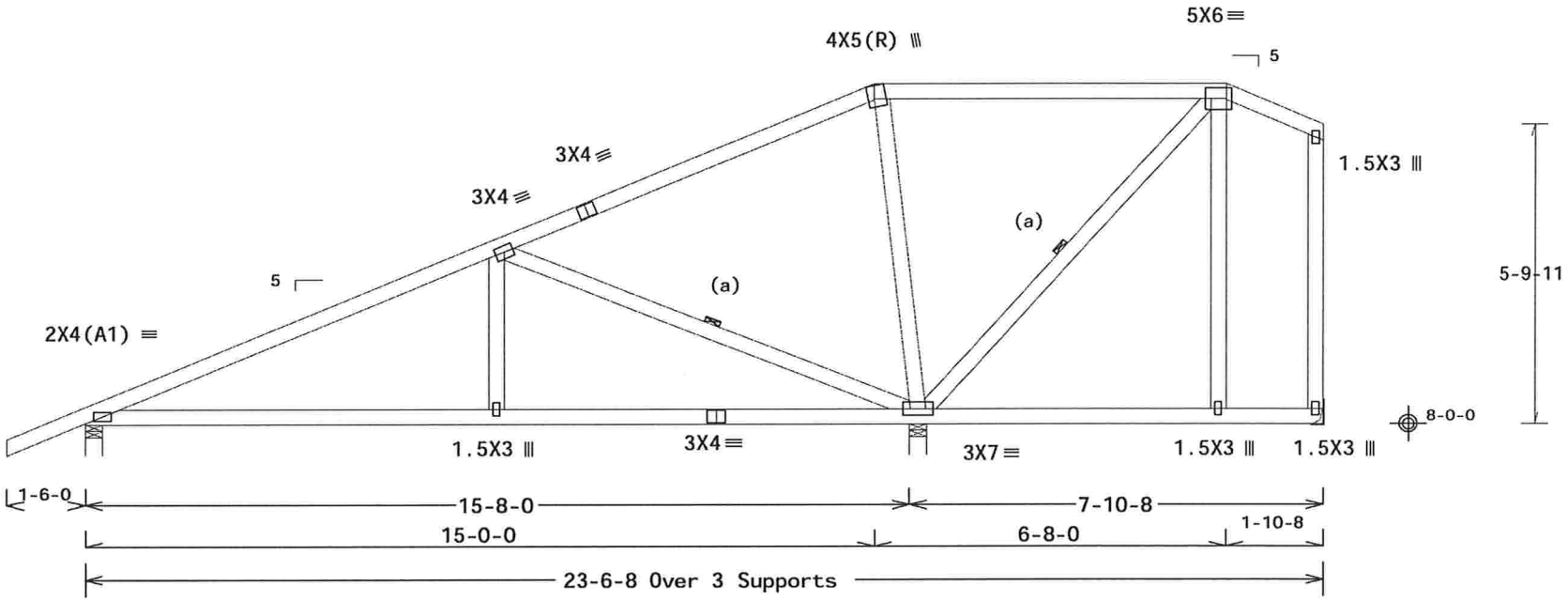

R=1307 U=168 W=4"

R=629 U=41 W=4"
RL=114/-46

R=41 U=10 H=Simpson LUS24
Supported Member Face: (2) 0.148"x3" nails
Supporting Member Face: (4) 0.148"x3" nails
Supporting Member : (1) 2x6 SP_#2_12A

Design Crit: FBC2010Res/TPI-2007(STD)

PLT TYP. Wave FT/RT=20%(0%)/10(0) 10.03.11.0209.20 QTY:1 FL/-/4/-/-/R/- Scale =.3125"/Ft.

WILLIAM H. KRICK LICENSE No. 70861 STATE OF FLORIDA PROFESSIONAL ENGINEER
03/18/2013

ALPINE
ITW Building Components Group Inc.
Haines City, FL 33844
FL COA #0 278

WARNING READ AND FOLLOW ALL NOTES ON THIS SHEET!
IMPORTANT FURNISH THIS DESIGN TO ALL CONTRACTORS INCLUDING INSTALLERS.

Trusses require extreme care in fabricating, handling, shipping, installing and bracing. Refer to and follow the latest edition of BCSI (Building Component Safety Information, by TPI and WTCA) for safety practices prior to performing these functions. Installers shall provide temporary bracing per BCSI. Unless noted otherwise, top chord shall have properly attached structural sheathing and bottom chord shall have a properly attached rigid ceiling. Locations shown for permanent lateral restraint of webs shall have bracing installed per BCSI sections B3, B7 or B10, as applicable.

ITW Building Components Group Inc. (ITWBCG) shall not be responsible for any deviation from this design, any failure to build the truss in conformance with ANSI/TPI 1, or for handling, shipping, installation and bracing of trusses. Apply plates to each face of truss and position as shown above and on the Joint Details, unless noted otherwise. Refer to drawings 160A-Z for standard plate positions. A seal on this drawing or cover page listing this drawing, indicates acceptance of professional engineering responsibility solely for the design shown. The suitability and use of this design for any structure is the responsibility of the Building Designer per ANSI/TPI 1 Sec.2. For more information see: This job's general notes page; ITW-BCG: www.itwbcg.com; TPI: www.tpinst.org; WTCA: www.sbcindustry.com; ICC: www.iccsafe.org

TC LL	20.0 PSF	REF	R487-- 85779
TC DL	7.0 PSF	DATE	03/18/13
BC DL	10.0 PSF	DRW	HCUSR487 13077025
BC LL	0.0 PSF	HC-ENG	WHK/WHK
TOT.LD.	37.0 PSF	SEQN-	69143
DUR.FAC.	1.25		
SPACING	24.0"	JREF-	1UUK487_Z01

THIS DWG PREPARED FROM COMPUTER INPUT (LOADS & DIMENSIONS) SUBMITTED BY TRUSS MFR.

(13-046B--Fill in later Taylor Model -- Mayfair Sub-Div - H15AV 31'8" Stepdown Hip)

Top chord 2x4 SP_#1_12A :T3 2x4 SP M-30:
Bot chord 2x4 SP_#1_12A
Webs 2x4 SP_#3__12A :W6 2x4 SP_#1_12A:

Lumber grades designated with "12A" use design values approved 1/5/2012 by ALSC.

Right cantilever is exposed to wind

Bottom chord checked for 10.00 psf non-concurrent live load.

MWFRS loads based on trusses located at least 15.00 ft. from roof edge.

120 mph wind, 15.00 ft mean hgt, ASCE 7-10, CLOSED bldg, not located within 9.00 ft from roof edge, RISK CAT II, EXP C, wind TC DL=3.5 psf, wind BC DL=5.0 psf. GCpi(+/-)=0.18

Wind loads and reactions based on MWFRS with additional C&C member design.

(a) Continuous lateral bracing equally spaced on member.

Deflection meets L/240 live and L/180 total load. Creep increase factor for dead load is 1.50.

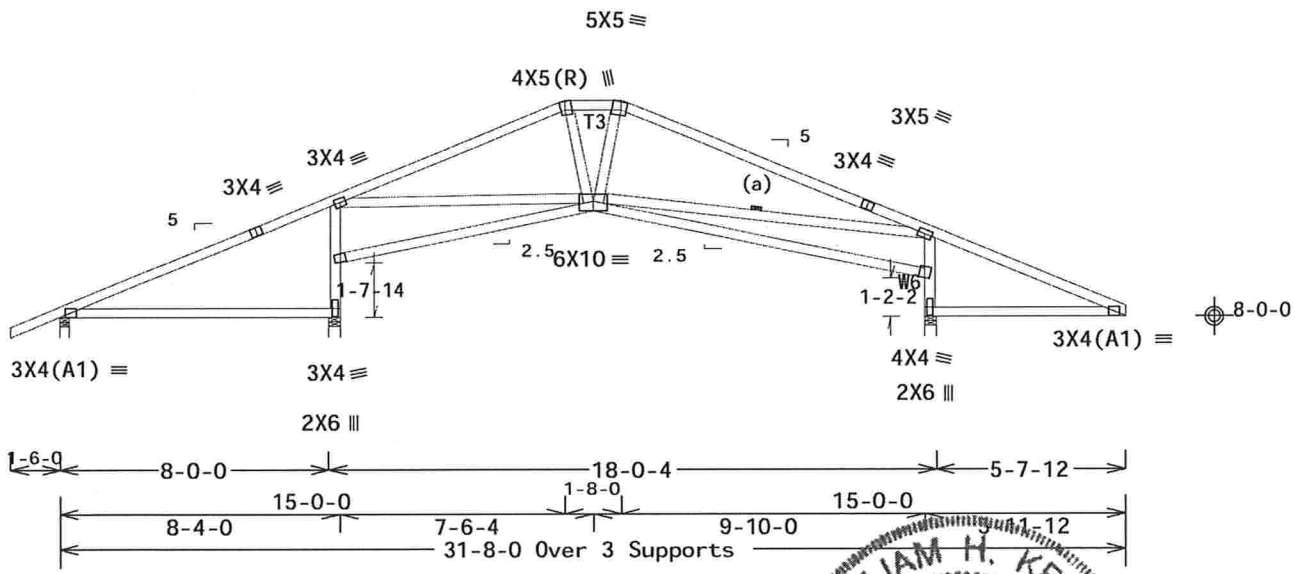

Design Crit: FBC2010Res/TPI-2007(STD)

PLT TYP. Wave

FT/RT=20%(0%)/10(0) 10.03.11.02.09.20 QTY 1 FL/-/4/-/-/R/- Scale =.1875"/Ft.

ALPINE
ITW Building Components Group Inc.
Haines City, FL 33844
FL COA #0 278

WARNING READ AND FOLLOW ALL NOTES ON THIS SHEET!
IMPORTANT FURNISH THIS DESIGN TO ALL CONTRACTORS INCLUDING INSTALLERS.

Trusses require extreme care in fabricating, handling, shipping, installing and bracing. Refer to and follow the latest edition of BCSI (Building Component Safety Information, by TPI and WTCA) for safety practices prior to performing these functions. Installers shall provide temporary bracing per BCSI. Unless noted otherwise, top chord shall have properly attached structural sheathing and bottom chord shall have a properly attached rigid ceiling. Locations shown for permanent lateral restraint of webs shall have bracing installed per BCSI sections B3, B7 or B10, as applicable.

ITW Building Components Group Inc. (ITWBCG) shall not be responsible for any deviation from this design, any failure to build the truss in conformance with ANSI/TPI 1, or for handling, shipping, installation & bracing of trusses. Apply plates to each face of truss and position as shown above and on the Joint Details, unless noted otherwise. Refer to drawings 160A-Z for standard plate positions. A seal on this drawing or cover page listing this drawing, indicates acceptance of professional engineering responsibility solely for the design shown. The suitability and use of this design for any structure is the responsibility of the Building Designer per ANSI/TPI 1 Sec.2. For more information see: This job's general notes page; ITW-BCG: www.itwbcg.com; TPI: www.tpinst.org; WTCA: www.sbcindustry.com; ICC: www.iccsafe.org

WILLIAM H. KRICK
LICENSE
No. 70861
STATE OF FLORIDA
PROFESSIONAL ENGINEER
03/18/2013

TC LL	20.0 PSF	REF	R487-- 85780
TC DL	7.0 PSF	DATE	03/18/13
BC DL	10.0 PSF	DRW	HCUSR487 13077026
BC LL	0.0 PSF	HC-ENG	WHK/WHK
TOT.LD.	37.0 PSF	SEQN-	69282
DUR.FAC.	1.25		
SPACING	24.0"	JREF-	1UUK487_Z01

THIS DWG PREPARED FROM COMPUTER INPUT (LOADS & DIMENSIONS) SUBMITTED BY TRUSS MFR.

(13-046B--Fill in later Taylor Model -- Mayfair Sub-Div - H17AVM 23'6"8 Common)

Top chord 2x4 SP_#1_12A
Bot chord 2x4 SP_#1_12A
Webs 2x4 SP_#3__12A

Lumber grades designated with "12A" use design values approved 1/5/2012 by ALSC.

H = recommended connection based on manufacturer tested capacities and calculations. Conditions may exist that require different connections than indicated. Refer to manufacturer publication for additional information.

(a) Continuous lateral bracing equally spaced on member.

Bottom chord checked for 10.00 psf non-concurrent live load.

Deflection meets L/240 live and L/180 total load. Creep increase factor for dead load is 1.50.

MWFRS loads based on trusses located at least 15.00 ft. from roof edge.

120 mph wind, 15.00 ft mean hgt, ASCE 7-10, CLOSED bldg, not located within 9.00 ft from roof edge, RISK CAT II, EXP C, wind TC DL=3.5 psf, wind BC DL=5.0 psf. GCpi(+/-)=0.18

Wind loads and reactions based on MWFRS with additional C&C member design.

Right end vertical not exposed to wind pressure.

Hanger specified assumes connection to supporting chord is located a minimum of five times the depth of the supporting chord from any unsupported end, unless unsupported chord end has 85% plating coverage.

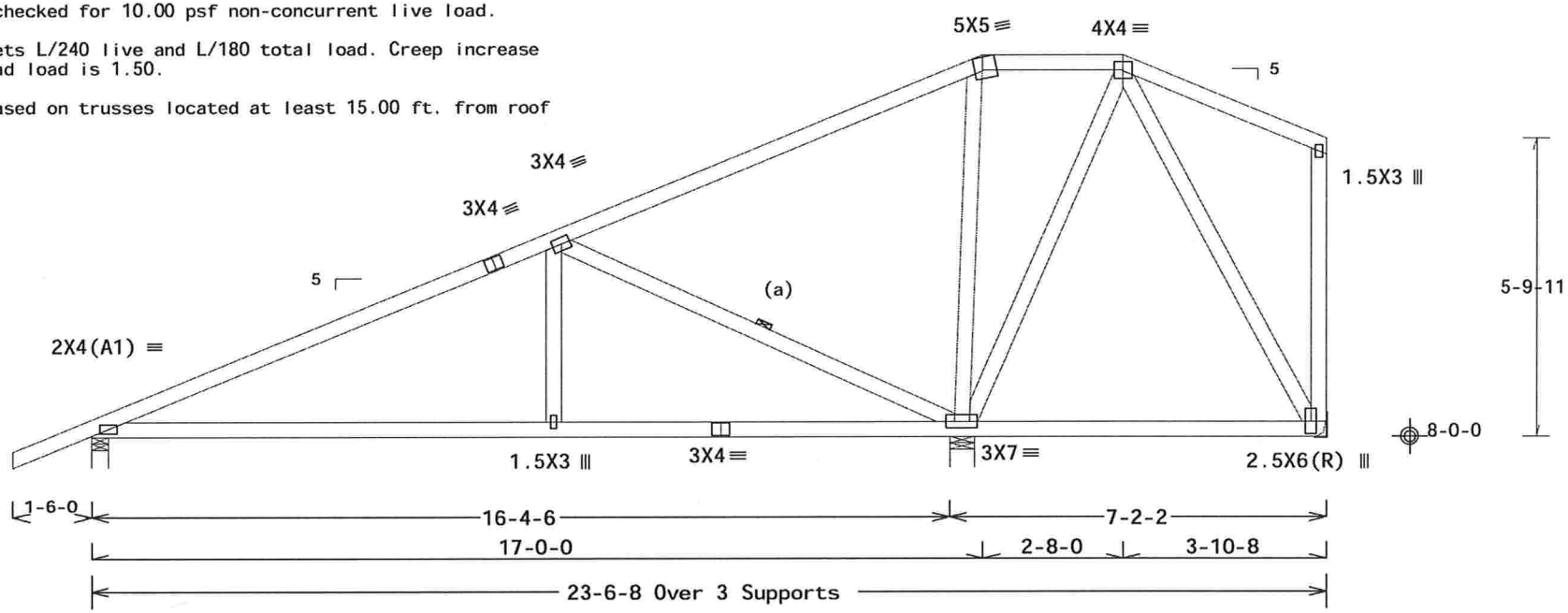

R=626 U=28 W=4"
RL=130/-61

R=1202 U=90 W=3.657"

R=151 U=48 H=Simpson LUS24
Supported Member Face: (2) 0.148"x3" nails
Supporting Member Face: (4) 0.148"x3" nails
Supporting Member : (1) 2x6 SP_#2_12A

Design Crit: FBC2010Res/TPI-2007(STD)

PLT TYP. Wave | FT/RT=20%(0%)/10(0) | 10.03.11.0209.20 | QTY 1 | FL/-/4/-/-/R/- | Scale =.3125"/Ft.

WILLIAM H. KRICK LICENSE No. 70861 STATE OF FLORIDA PROFESSIONAL ENGINEER
03/18/2013

ALPINE
ITW Building Components Group Inc.
Haines City, FL 33844
FL COA #0 278

WARNING READ AND FOLLOW ALL NOTES ON THIS SHEET!
IMPORTANT FURNISH THIS DESIGN TO ALL CONTRACTORS INCLUDING INSTALLERS.

Trusses require extreme care in fabricating, handling, shipping, installing and bracing. Refer to and follow the latest edition of BCSI (Building Component Safety Information, by TPI and WTCA) for general practices prior to performing these functions. Installers shall provide temporary bracing per BCSI. Unless noted otherwise, top chord shall have properly attached structural sheathing and bottom chord shall have a properly attached rigid ceiling. Locations shown for permanent lateral restraint of webs shall have bracing installed per BCSI sections B3, B7 or B10, as applicable.

ITW Building Components Group Inc. (ITWBCG) shall not be responsible for any deviation from this design, any failure to build the truss in conformance with ANSI/TPI 1, or for handling, shipping, installation and bracing of trusses. Apply plates to each face of truss and position as shown above and on the Joint Details, unless noted otherwise. Refer to drawings 160A-Z for standard plate positions. A seal on this drawing or cover page listing this drawing, indicates acceptance of professional engineering responsibility solely for the design shown. The suitability and use of this design for any structure is the responsibility of the Building Designer per ANSI/TPI 1 Sec.2. For more information see: This job's general notes page; ITW-BCG: www.itwbcg.com; TPI: www.tpinst.org; WTCA: www.sbcindustry.com; ICC: www.iccsafe.org

TC LL	20.0 PSF	REF	R487-- 85781
TC DL	7.0 PSF	DATE	03/18/13
BC DL	10.0 PSF	DRW	HCUSR487 13077027
BC LL	0.0 PSF	HC-ENG	WHK/WHK
TOT.LD.	37.0 PSF	SEQN-	69147
DUR.FAC.	1.25		
SPACING	24.0"	JREF-	1UUK487_Z01

THIS DWG PREPARED FROM COMPUTER INPUT (LOADS & DIMENSIONS) SUBMITTED BY TRUSS MFR.

(13-046B--Fill in later Taylor Model -- Mayfair Sub-Div - H19AVM 23'6"8 Common)

Top chord 2x4 SP_#1_12A
Bot chord 2x4 SP_#1_12A
Webs 2x4 SP_#3__12A

Lumber grades designated with "12A" use design values approved 1/5/2012 by ALSC.

H = recommended connection based on manufacturer tested capacities and calculations. Conditions may exist that require different connections than indicated. Refer to manufacturer publication for additional information.

(a) Continuous lateral bracing equally spaced on member.

Bottom chord checked for 10.00 psf non-concurrent live load.

Deflection meets L/240 live and L/180 total load. Creep increase factor for dead load is 1.50.

Shim all supports to solid bearing.

MWFRS loads based on trusses located at least 15.00 ft. from roof edge.

120 mph wind, 15.00 ft mean hgt, ASCE 7-10, CLOSED bldg, not located within 9.00 ft from roof edge, RISK CAT II, EXP C, wind TC DL=3.5 psf, wind BC DL=5.0 psf. GCpi(+/-)=0.18

Wind loads and reactions based on MWFRS with additional C&C member design.

Right end vertical not exposed to wind pressure.

Hanger specified assumes connection to supporting chord is located a minimum of five times the depth of the supporting chord from any unsupported end, unless unsupported chord end has 85% plating coverage.

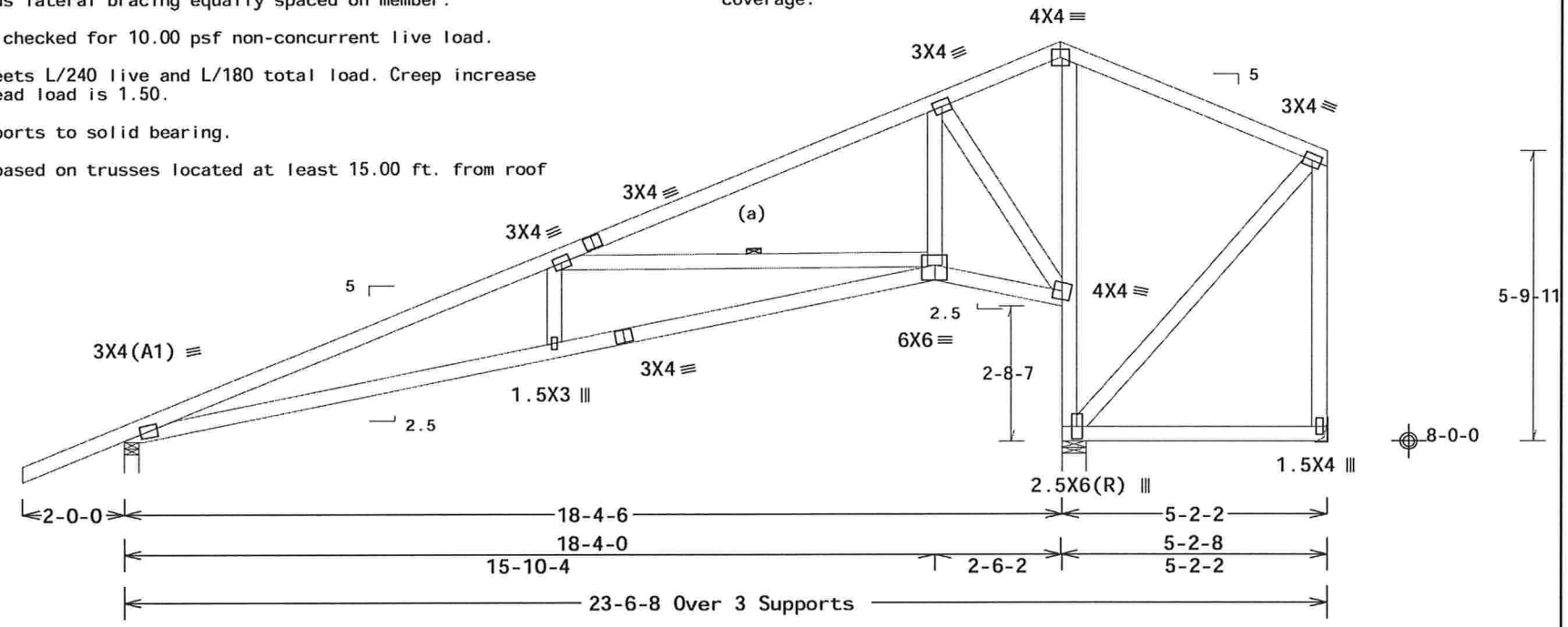

R=1015 U=54 W=5.657"

R=812 U=38 W=3.5"
RL=159/-93

R=123 U=32 H=Simpson LUS24
Supported Member Face: (2) 0.148"x3" nails
Supporting Member Face: (4) 0.148"x3" nails
Supporting Member : (1) 2x4 SP_#2_12A

Design Crit: FBC2010Res/TPI-2007(STD)
FT/RT=20%(0%)/10(0) 10.03.11.0209.20 QTY:1 FL/-/4/-/-/R/- Scale =.3125"/Ft.

PLT TYP. Wave

WILLIAM H. KRICK LICENSE No. 70861 STATE OF FLORIDA PROFESSIONAL ENGINEER
03/18/2013

ALPINE
ITW Building Components Group Inc.
Haines City, FL 33844
FL COA #0 278

WARNING READ AND FOLLOW ALL NOTES ON THIS SHEET!
IMPORTANT FURNISH THIS DESIGN TO ALL CONTRACTORS INCLUDING INSTALLERS.

Trusses require extreme care in fabricating, handling, shipping, installing and bracing. Refer to and follow the latest edition of BCSI (Building Component Safety Information, by TPI and WTCA) for safety practices prior to performing these functions. Installers shall provide temporary bracing per BCSI. Unless noted otherwise, top chord shall have properly attached structural sheathing and bottom chord shall have a properly attached rigid ceiling. Locations shown for permanent lateral restraint of webs shall have bracing installed per BCSI sections B3, B7 or B10, as applicable.

ITW Building Components Group Inc. (ITWBCG) shall not be responsible for any deviation from this design, any failure to build the truss in conformance with ANSI/TPI 1, or for handling, shipping, installation and bracing of trusses. Apply plates to each face of truss and position as shown above and on the Joint Details, unless noted otherwise. Refer to drawings 160A-Z for standard plate positions. A seal on this drawing or cover page listing this drawing, indicates acceptance of professional engineering responsibility solely for the design shown. The suitability and use of this design for any structure is the responsibility of the Building Designer per ANSI/TPI 1 Sec.2. For more information see: This job's general notes page; ITW-BCG: www.itwbcg.com; TPI: www.tpinst.org; WTCA: www.sbcindustry.com; ICC: www.iccsafe.org

TC LL	20.0 PSF	REF	R487-- 85782
TC DL	7.0 PSF	DATE	03/18/13
BC DL	10.0 PSF	DRW	HCUSR487 13077028
BC LL	0.0 PSF	HC-ENG	WHK/WHK
TOT.LD.	37.0 PSF	SEQN-	69076
DUR.FAC.	1.25		
SPACING	24.0"	JREF-	1UUK487_Z01

THIS DWG PREPARED FROM COMPUTER INPUT (LOADS & DIMENSIONS) SUBMITTED BY TRUSS MFR.

(13-046B--Fill in later Taylor Model -- Mayfair Sub-Div - H7A 31'8" Stepdown Hip Girder)

Top chord 2x4 SP_#1_12A
Bot chord 2x4 SP_#1_12A
Webs 2x4 SP_#3__12A :W1 2x6 SP_#2_12A:
:W3 2x4 SP_#1_12A:

Lumber grades designated with "12A" use design values approved 1/5/2012 by ALSC.

Brg blocks:0.128"x3", min. nails

brg	x-loc	#blocks	length/blk	#nails/blk	wall plate
2	8.000'	1	12"	4	Rigid Surface

Brg block to be same size and species as chord.
Refer to drawing CNNAILSP0109 for more information.

Negative reaction(s) of -560# MAX. (See below) from a non-wind load case requires uplift connection.

120 mph wind, 15.00 ft mean hgt, ASCE 7-10, CLOSED bldg, not located within 4.50 ft from roof edge, RISK CAT II, EXP C, wind TC DL=3.5 psf, wind BC DL=5.0 psf. GCpi(+/-)=0.18

H = recommended connection based on manufacturer tested capacities and calculations. Conditions may exist that require different connections than indicated. Refer to manufacturer publication for additional information.

These support conditions used at bearings indicated
(H1) = Simpson HUS26 w/ (1)2x6 SP M-26 supporting member.
(14) 0.148"x3" nails into supporting member,
(4) 0.148"x3" nails into supported member.

Special loads
------(Lumber Dur.Fac.=1.25 / Plate Dur.Fac.=1.25)
TC- From 55 plf at -1.50 to 55 plf at 7.00
TC- From 28 plf at 7.00 to 28 plf at 24.67
TC- From 55 plf at 24.67 to 55 plf at 31.67
BC- From 4 plf at -1.50 to 4 plf at 0.00
BC- From 20 plf at 0.00 to 20 plf at 7.05
BC- From 10 plf at 7.05 to 10 plf at 24.64
BC- From 20 plf at 24.64 to 20 plf at 31.67
TC- 232.37 lb Conc. Load at 7.03,24.64
TC- 166.13 lb Conc. Load at 9.06,11.06,13.06,15.06
16.60,18.60,20.60,22.60
BC- 445.86 lb Conc. Load at 7.03,24.64
BC- 125.22 lb Conc. Load at 9.06,11.06,13.06,15.06
16.60,18.60,20.60,22.60

(**) 1 plate(s) require special positioning. Refer to scaled plate plot details for special positioning requirements.

Wind loads and reactions based on MWFRS.

Hanger specified assumes connection to supporting chord is located a minimum of five times the depth of the supporting chord from any unsupported end, unless unsupported chord end has 85% plating coverage.

(a) Continuous lateral bracing equally spaced on member.

Bottom chord checked for 10.00 psf non-concurrent live load.

Deflection meets L/240 live and L/180 total load. Creep increase factor for dead load is 1.50.

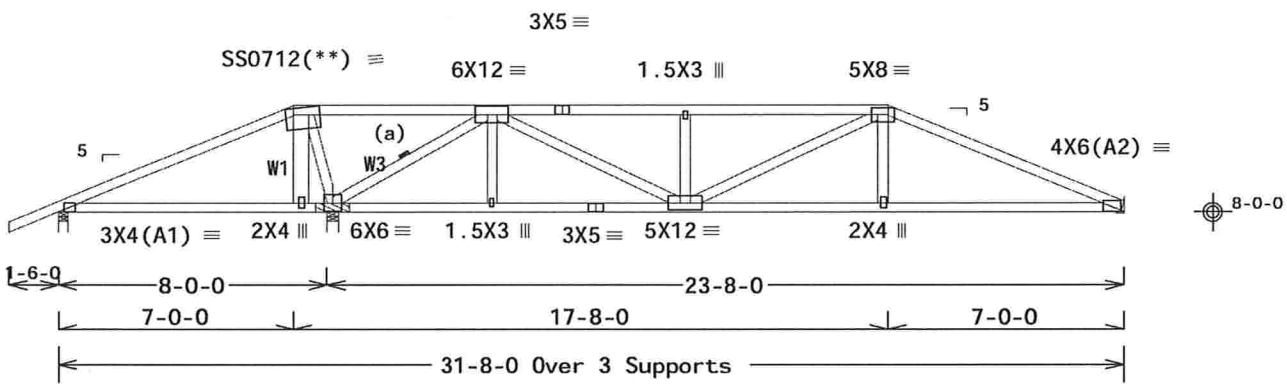

R=49/-560 U=0 W=3.5" R=4188 U=757 W=4"

R=1628 U=289 H=Simpson HUS26
Supported Member Face: (4) 0.148"x3" nails
Supporting Member Face: (14) 0.148"x3" nails
Supporting Member : (1) 2x6 SP M-26

Design Crit: FBC2010Res/TPI-2007(STD)

PLT TYP. 18 Gauge HS,Wave FT/RT=20%(0%)/10(0) 10.03.11.0209 20 QTY:1 FL/-/4/-/-/R/- Scale =.1875"/Ft.

WILLIAM H. KAPP LICENSE No. 70861 STATE OF FLORIDA PROFESSIONAL ENGINEER
03/18/2013

ALPINE
ITW Building Components Group Inc.
Haines City, FL 33844
FL COA #0 278

WARNING READ AND FOLLOW ALL NOTES ON THIS SHEET!
IMPORTANT FURNISH THIS DESIGN TO ALL CONTRACTORS INCLUDING INSTALLERS.

Trusses require extreme care in fabricating, handling, shipping, installing and bracing. Refer to and follow the latest edition of BCSI (Building Component Safety Information, by TPI and WTCA) for safety practices prior to performing these functions. Installers shall provide temporary bracing per BCSI. Unless noted otherwise, top chord shall have properly attached structural sheathing and bottom chord shall have a properly attached rigid ceiling. Locations shown for permanent lateral restraint of web members shall have bracing installed per BCSI sections B3, B7 or B10, as applicable.

ITW Building Components Group Inc. (ITWBCG) shall not be responsible for any deviation from this design, nor any failure to build the truss in conformance with ANSI/TPI 1, or for handling, shipping, installation & bracing of trusses. Apply plates to each face of truss and position as shown above and on the Joint Details, unless noted otherwise. Refer to drawings 160A-Z for standard plate positions. A seal on this drawing or cover page listing this drawing, indicates acceptance of professional engineering responsibility solely for the design shown. The suitability and use of this design for any structure is the responsibility of the Building Designer per ANSI/TPI 1 Sec.2. For more information see: This job's general notes page; ITW-BCG: www.itwbcg.com; TPI: www.tpinst.org; WTCA: www.sbcindustry.com; ICC: www.iccsafe.org

TC LL	20.0 PSF	REF	R487-- 85783
TC DL	7.0 PSF	DATE	03/18/13
BC DL	10.0 PSF	DRW	HCUSR487 13077029
BC LL	0.0 PSF	HC-ENG	WHK/WHK
TOT.LD.	37.0 PSF	SEQN-	69376
DUR.FAC.	1.25		
SPACING	24.0"	JREF-	1UUK487_Z01

THIS DWG PREPARED FROM COMPUTER INPUT (LOADS & DIMENSIONS) SUBMITTED BY TRUSS MFR.

(13-046B--Fill in later Taylor Model -- Mayfair Sub-Div - H7AM 23'6"8 Stepdown Hip Girder)

Top chord 2x4 SP_#1_12A
Bot chord 2x4 SP_#1_12A
Webs 2x4 SP_#3__12A :W6 2x4 SP_#1_12A:

Lumber grades designated with "12A" use design values approved 1/5/2012 by ALSC.

120 mph wind, 15.00 ft mean hgt, ASCE 7-10, CLOSED bldg, not located within 9.00 ft from roof edge, RISK CAT II, EXP C, wind TC DL=3.5 psf, wind BC DL=5.0 psf. GCpi(+/-)=0.18

Wind loads and reactions based on MWFRS.

H = recommended connection based on manufacturer tested capacities and calculations. Conditions may exist that require different connections than indicated. Refer to manufacturer publication for additional information.

Bottom chord checked for 10.00 psf non-concurrent live load.

Special loads
------(Lumber Dur.Fac.=1.25 / Plate Dur.Fac.=1.25)
TC- From 55 plf at -1.50 to 55 plf at 7.00
TC- From 28 plf at 7.00 to 28 plf at 23.54
BC- From 4 plf at -1.50 to 4 plf at 0.00
BC- From 20 plf at 0.00 to 20 plf at 7.03
BC- From 10 plf at 7.03 to 10 plf at 23.54
TC- 232.37 lb Conc. Load at 7.03
TC- 166.13 lb Conc. Load at 9.06,11.06,13.06,15.06 17.06,19.06,21.06,23.06
BC- 445.86 lb Conc. Load at 7.03
BC- 125.22 lb Conc. Load at 9.06,11.06,13.06,15.06 17.06,19.06,21.06,23.06

Right end vertical not exposed to wind pressure.

Hanger specified assumes connection to supporting chord is located a minimum of five times the depth of the supporting chord from any unsupported end, unless unsupported chord end has 85% plating coverage.

Deflection meets L/240 live and L/180 total load. Creep increase factor for dead load is 1.50.

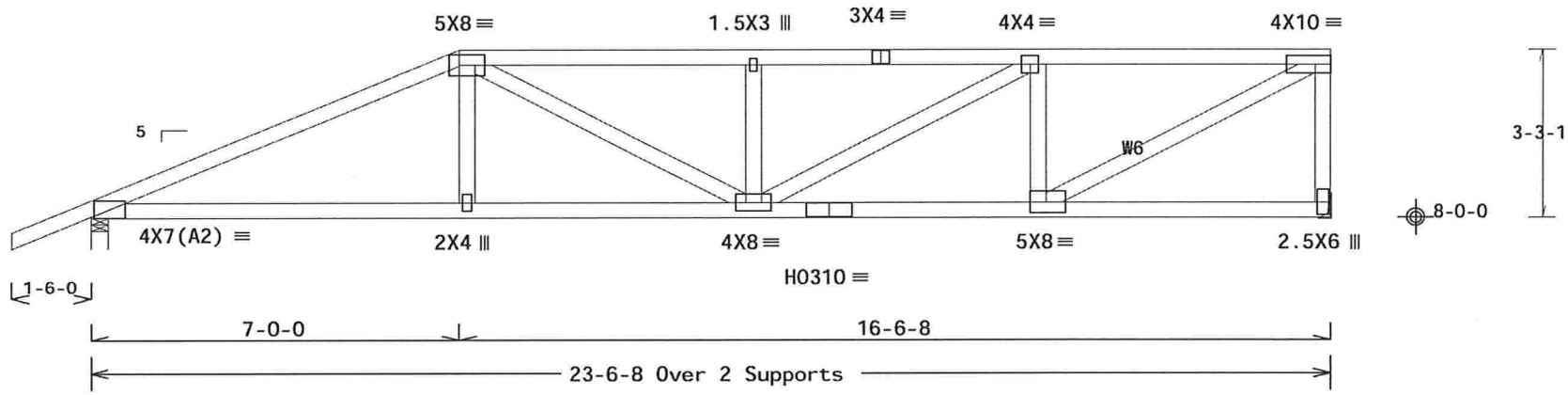

R=1987 U=375 W=4"

R=2259 U=414 H=Simpson HUS26
Supported Member Face: (6) 0.148"x3" nails
Supporting Member Face: (14) 0.148"x3" nails
Supporting Member : (1) 2x6 SP_#2_12A

Design Crit: FBC2010Res/TPI-2007(STD)

PLT TYP. 20 Gauge HS,Wave FT/RT=20%(0%)/10(0) 10.03.11.0209.20 QTY:1 FL/-/4/-/-/R/- Scale =.3125"/Ft.

ALPINE
ITW Building Components Group Inc.
Haines City, FL 33844
FL COA #0 278

WARNING READ AND FOLLOW ALL NOTES ON THIS SHEET!
IMPORTANT FURNISH THIS DESIGN TO ALL CONTRACTORS INCLUDING INSTALLERS.

Trusses require extreme care in fabricating, handling, shipping, installing and bracing. Refer to and follow the latest edition of BCSI (Building Component Safety Information, by TPI and WTCA) for safety practices prior to performing these functions. Installers shall provide temporary bracing per BCSI. Unless noted otherwise, top chord shall have properly attached structural sheathing and bottom chord shall have a properly attached rigid ceiling. Locations shown for permanent lateral restraint of webs shall have bracing installed per BCSI sections B3, B7 or B10, as applicable.

ITW Building Components Group Inc. (ITWBCG) shall not be responsible for any deviation from this design, any failure to build the truss in conformance with ANSI/TPI 1, or for handling, shipping, installation and bracing of trusses. Apply plates to each face of truss and position as shown above and on the Joint Details, unless noted otherwise. Refer to drawings 160A-Z for standard plate positions. A seal on this drawing or cover page listing this drawing, indicates acceptance of professional engineering responsibility solely for the design shown. The suitability and use of this design for any structure is the responsibility of the Building Designer per ANSI/TPI 1 Sec.2. For more information see: This job's general notes page; ITW-BCG: www.itwbcg.com; TPI: www.tpinst.org; WTCA: www.sbcindustry.com; ICC: www.iccsafe.org

WILLIAM H. KRICK LICENSE No. 70861 STATE OF FLORIDA PROFESSIONAL ENGINEER
03/18/2013

TC LL	20.0 PSF	REF	R487-- 85784
TC DL	7.0 PSF	DATE	03/18/13
BC DL	10.0 PSF	DRW	HCUSR487 13077030
BC LL	0.0 PSF	HC-ENG	WHK/WHK
TOT.LD.	37.0 PSF	SEQN-	69086
DUR.FAC.	1.25		
SPACING	24.0"	JREF-	1UUK487_Z01

THIS DWG PREPARED FROM COMPUTER INPUT (LOADS & DIMENSIONS) SUBMITTED BY TRUSS MFR.

(13-046B--Fill in later Taylor Model -- Mayfair Sub-Div - H9A 31'8" Stepdown Hip)

Top chord 2x4 SP_#1_12A
Bot chord 2x4 SP_#1_12A
Webs 2x4 SP_#3__12A

Lumber grades designated with "12A" use design values approved 1/5/2012 by ALSC.

H = recommended connection based on manufacturer tested capacities and calculations. Conditions may exist that require different connections than indicated. Refer to manufacturer publication for additional information.

These support conditions used at bearings indicated
(H1) = Simpson LUS26 w/ (1)2x6 SP M-26 supporting member.
(4) 0.148"x3" nails into supporting member,
(3) 0.148"x3" nails into supported member.

MWFRS loads based on trusses located at least 7.50 ft. from roof edge.

120 mph wind, 15.00 ft mean hgt, ASCE 7-10, CLOSED bldg, not located within 9.00 ft from roof edge, RISK CAT II, EXP C, wind TC DL=3.5 psf, wind BC DL=5.0 psf. GCpi(+/-)=0.18

Wind loads and reactions based on MWFRS with additional C&C member design.

Hanger specified assumes connection to supporting chord is located a minimum of five times the depth of the supporting chord from any unsupported end, unless unsupported chord end has 85% plating coverage.

Bottom chord checked for 10.00 psf non-concurrent live load.

Deflection meets L/240 live and L/180 total load. Creep increase factor for dead load is 1.50.

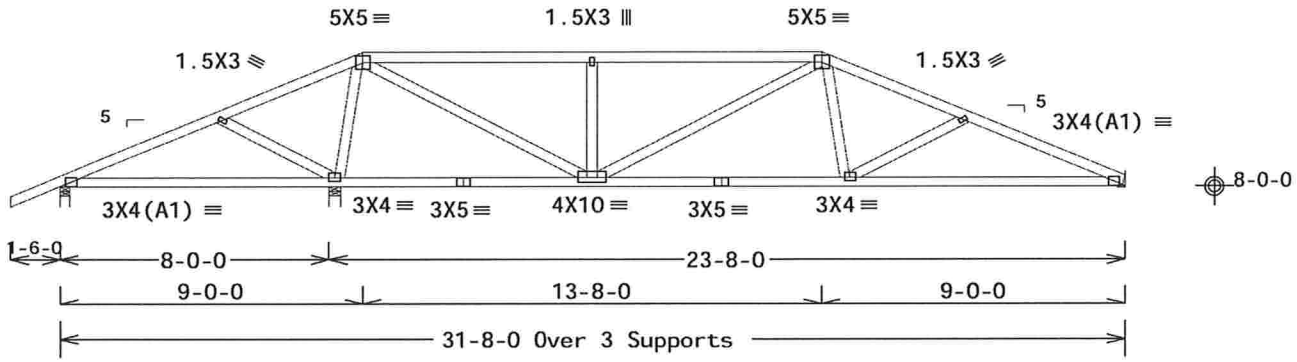

R=279 U=38 W=3.5"
RL=83/-89

R=1500 U=263 W=4"

R=812 U=133 H=Simpson LUS26
Supported Member Face: (3) 0.148"x3" nails
Supporting Member Face: (4) 0.148"x3" nails
Supporting Member : (1) 2x6 SP M-26

Design Crit: FBC2010Res/TPI-2007(STD)

PLT TYP. Wave FT/RT=20%(0%)/10(0) 10.03.11.0209.20 QTY:1 FL/-/4/-/-/R/- Scale =.1875"/Ft.

WILLIAM H. KEPPLER LICENSE No. 70861 STATE OF FLORIDA PROFESSIONAL ENGINEER

03/18/2013

ALPINE
ITW Building Components Group Inc.
Haines City, FL 33844
FL COA #0 278

WARNING READ AND FOLLOW ALL NOTES ON THIS SHEET!
IMPORTANT FURNISH THIS DESIGN TO ALL CONTRACTORS INCLUDING INSTALLERS.

Trusses require extreme care in fabricating, handling, shipping, installing and bracing. Refer to and follow the latest edition of BCSI (Building Component Safety Information, by TPI and WTCA) for safety practices prior to performing these functions. Installers shall provide temporary bracing per BCSI. Unless noted otherwise, top chord shall have properly attached structural sheathing and bottom chord shall have a properly attached rigid ceiling. Locations shown for permanent lateral restraint shall have bracing installed per BCSI sections B3, B7 or B10, as applicable.

ITW Building Components Group Inc. (ITWBCG) shall not be responsible for any deviation from this design, any failure to build the truss in conformance with ANSI/TPI 1, or for handling, shipping, installation and bracing of trusses. Apply plates to each face of truss and position as shown above and on the Joint Details, unless noted otherwise. Refer to drawings 160A-Z for standard plate positions. A seal on this drawing or cover page listing this drawing, indicates acceptance of professional engineering responsibility solely for the design shown. The suitability and use of this design for any structure is the responsibility of the Building Designer per ANSI/TPI 1 Sec.2. For more information see: This job's general notes page; ITW-BCG: www.itwbcg.com; TPI: www.tpinst.org; WTCA: www.sbcindustry.com; ICC: www.iccsafe.org

TC LL	20.0 PSF	REF	R487-- 85785
TC DL	7.0 PSF	DATE	03/18/13
BC DL	10.0 PSF	DRW	HCUSR487 13077031
BC LL	0.0 PSF	HC-ENG	WHK/WHK
TOT.LD.	37.0 PSF	SEQN-	69294
DUR.FAC.	1.25		
SPACING	24.0"	JREF-	1UUK487_Z01

(13-046B--Fill in later Taylor Model -- Mayfair Sub-Div - H9AM 23'6"8 Stepdown Hip)

Top chord 2x4 SP_#1_12A
Bot chord 2x4 SP_#1_12A
Webs 2x4 SP_#3__12A

Lumber grades designated with "12A" use design values approved 1/5/2012 by ALSC.

H = recommended connection based on manufacturer tested capacities and calculations. Conditions may exist that require different connections than indicated. Refer to manufacturer publication for additional information.

Bottom chord checked for 10.00 psf non-concurrent live load.

MWFRS loads based on trusses located at least 7.50 ft. from roof edge.

120 mph wind, 15.00 ft mean hgt, ASCE 7-10, CLOSED bldg, not located within 9.00 ft from roof edge, RISK CAT II, EXP C, wind TC DL=3.5 psf, wind BC DL=5.0 psf. GCpi(+/-)=0.18

Wind loads and reactions based on MWFRS with additional C&C member design.

Right end vertical not exposed to wind pressure.

Hanger specified assumes connection to supporting chord is located a minimum of five times the depth of the supporting chord from any unsupported end, unless unsupported chord end has 85% plating coverage.

(a) Continuous lateral bracing equally spaced on member.

Deflection meets L/240 live and L/180 total load. Creep increase factor for dead load is 1.50.

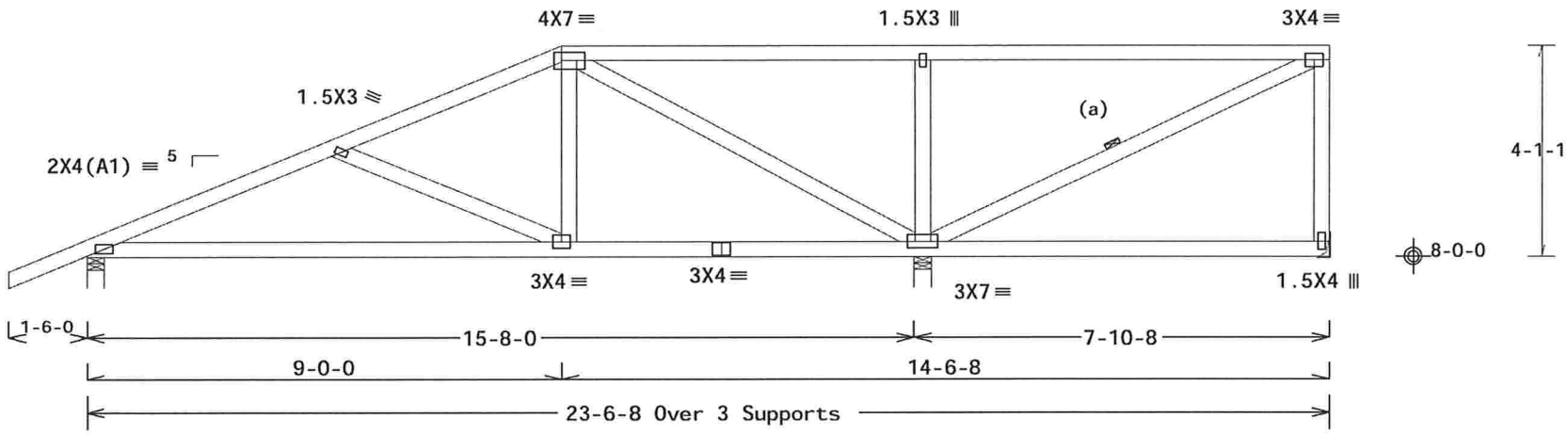

R=1079 U=209 W=4"

R=638 U=100 W=4"
RL=106/-26

R=214 U=34 H=Simpson LUS24
Supported Member Face: (2) 0.148"x3" nails
Supporting Member Face: (4) 0.148"x3" nails
Supporting Member : (1) 2x6 SP_#2_12A

WILLIAM H. KRICK LICENSE No. 70861 STATE OF FLORIDA PROFESSIONAL ENGINEER
03/18/2013

Design Crit: FBC2010Res/TPI-2007(STD)

PLT TYP. Wave | FT/RT=20%(0%)/10(0) | 10.03.11.02.09.20 | QTY:1 | FL/-/4/-/-/R/- | Scale =.3125"/Ft.

ALPINE
ITW Building Components Group Inc.
Haines City, FL 33844
FL COA #0 278

WARNING READ AND FOLLOW ALL NOTES ON THIS SHEET!
IMPORTANT FURNISH THIS DESIGN TO ALL CONTRACTORS INCLUDING INSTALLERS.

Trusses require extreme care in fabricating, handling, shipping, installing and bracing. Refer to and follow the latest edition of BCSI (Building Component Safety Information, by TPI and WTCA) for safety practices prior to performing these functions. Installers shall provide temporary bracing per BCSI. Unless noted otherwise, top chord shall have properly attached structural sheathing and bottom chord shall have a properly attached rigid ceiling. Locations shown for permanent lateral restraint of webs shall have bracing installed per BCSI sections B3, B7 or B10, as applicable.

ITW Building Components Group Inc. (ITWBCG) shall not be responsible for any deviation from this design, any failure to build the truss in conformance with ANSI/TPI 1, or for handling, shipping, installation and bracing of trusses. Apply plates to each face of truss and position as shown above and on the Joint Details, unless noted otherwise. Refer to drawings 160A-Z for standard plate positions. A seal on this drawing or cover page listing this drawing, indicates acceptance of professional engineering responsibility solely for the design shown. The suitability and use of this design for any structure is the responsibility of the Building Designer per ANSI/TPI 1 Sec.2. For more information see: This job's general notes page; ITW-BCG: www.itwbcg.com; TPI: www.tpinst.org; WTCA: www.sbcindustry.com; ICC: www.iccsafe.org

TC LL	20.0 PSF	REF	R487-- 85786
TC DL	7.0 PSF	DATE	03/18/13
BC DL	10.0 PSF	DRW	HCUSR487 13077032
BC LL	0.0 PSF	HC-ENG	WHK/WHK
TOT.LD.	37.0 PSF	SEQN-	69083
DUR.FAC.	1.25		
SPACING	24.0"	JREF-	1UUK487_Z01

THIS DWG PREPARED FROM COMPUTER INPUT (LOADS & DIMENSIONS) SUBMITTED BY TRUSS MFR.

(13-046B--Fill in later Taylor Model -- Mayfair Sub-Div - HJ7 9'10"13 Hip Jack Girder)

Top chord 2x4 SP_#1_12A
Bot chord 2x4 SP_#1_12A
Webs 2x4 SP_#3__12A

Lumber grades designated with "12A" use design values approved 1/5/2012 by ALSC.

120 mph wind, 15.00 ft mean hgt, ASCE 7-10, CLOSED bldg, not located within 9.00 ft from roof edge, RISK CAT II, EXP C, wind TC DL=3.5 psf, wind BC DL=5.0 psf. GCpi(+/-)=0.18

Wind loads and reactions based on MWFRS.

Provide (2) 16d common nails(0.162"x3.5"), toe nailed at Top chord.
Provide (3) 16d common nails(0.162"x3.5"), toe nailed at Bot chord.

Special loads
------(Lumber Dur.Fac.=1.25 / Plate Dur.Fac.=1.25)
TC- From 0 plf at -2.12 to 55 plf at 0.00
TC- From 2 plf at 0.00 to 2 plf at 9.90
BC- From 0 plf at -2.12 to 4 plf at 0.00
BC- From 2 plf at 0.00 to 2 plf at 9.90
TC- -27.95 lb Conc. Load at 1.48
TC- 109.89 lb Conc. Load at 4.31
TC- 225.67 lb Conc. Load at 7.13
BC- 12.36 lb Conc. Load at 1.48
BC- 96.94 lb Conc. Load at 4.31
BC- 174.57 lb Conc. Load at 7.13

Bottom chord checked for 10.00 psf non-concurrent live load.

Deflection meets L/240 live and L/180 total load. Creep increase factor for dead load is 1.50.

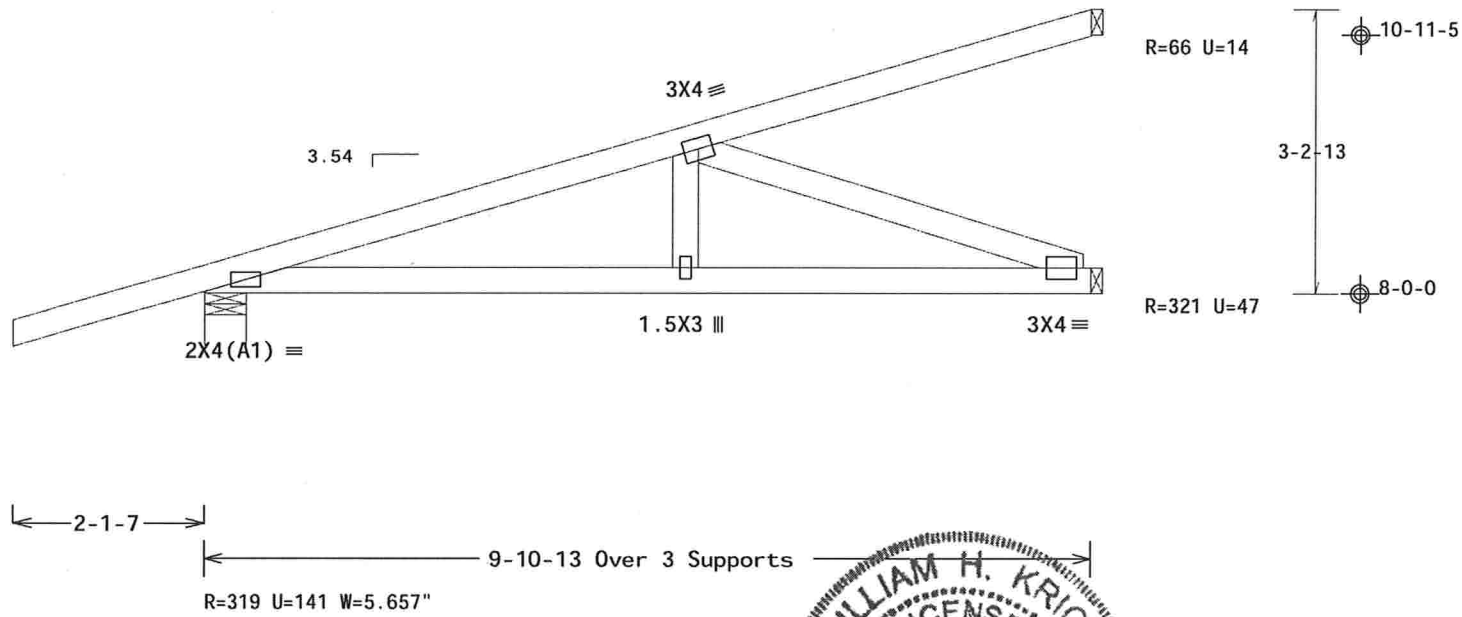

Design Crit: FBC2010Res/TPI-2007(STD)
FT/RT=20%(0%)/10(0) 10.03.11.0209.19 QTY:3 FL/-/4/-/-/R/-

PLT TYP. Wave

Scale =.5"/Ft.

WILLIAM H. KRICK LICENSE No. 70861 STATE OF FLORIDA PROFESSIONAL ENGINEER
03/18/2013

ALPINE
ITW Building Components Group Inc.
Haines City, FL 33844
FL COA #0 278

WARNING READ AND FOLLOW ALL NOTES ON THIS SHEET!
IMPORTANT FURNISH THIS DESIGN TO ALL CONTRACTORS INCLUDING INSTALLERS.

Trusses require extreme care in fabricating, handling, shipping, installing and bracing. Refer to and follow the latest edition of BCSI (Building Component Safety Information, by TPI and WTCA) for safety practices prior to performing these functions. Installers shall provide temporary bracing per BCSI. Unless noted otherwise, top chord shall have properly attached structural sheathing and bottom chord shall have a properly attached rigid ceiling. Locations shown for permanent lateral restraint of webs shall have bracing installed per BCSI sections B3, B7 or B10, as applicable.

ITW Building Components Group Inc. (ITWBCG) shall not be responsible for any deviation from this design, any failure to build the truss in conformance with ANSI/TPI 1, or for handling, shipping, installation and bracing of trusses. Apply plates to each face of truss and position as shown above and on the Joint Details, unless noted otherwise. Refer to drawings 160A-Z for standard plate positions. A seal on this drawing or cover page listing this drawing, indicates acceptance of professional engineering responsibility solely for the design shown. The suitability and use of this design for any structure is the responsibility of the Building Designer per ANSI/TPI 1 Sec.2. For more information see: This job's general notes page; ITW-BCG: www.itwbcg.com; TPI: www.tpinst.org; WTCA: www.sbcindustry.com; ICC: www.iccsafe.org

TC LL	20.0 PSF	REF	R487-- 85787
TC DL	7.0 PSF	DATE	03/18/13
BC DL	10.0 PSF	DRW	HCUSR487 13077033
BC LL	0.0 PSF	HC-ENG	WHK/WHK
TOT.LD.	37.0 PSF	SEQN-	52527
DUR.FAC.	1.25		
SPACING	24.0"	JREF-	1UUK487_Z01

CLB WEB BRACE SUBSTITUTION

THIS DETAIL IS TO BE USED WHEN CONTINUOUS LATERAL BRACING (CLB) IS SPECIFIED ON A TRUSS DESIGN BUT AN ALTERNATIVE WEB BRACING METHOD IS DESIRED.

NOTES:

THIS DETAIL IS ONLY APPLICABLE FOR CHANGING THE SPECIFIED CLB SHOWN ON SINGLE PLY SEALED DESIGNS TO T-BRACING OR SCAB BRACING.

ALTERNATIVE BRACING SPECIFIED IN CHART BELOW MAY BE CONSERVATIVE. FOR MINIMUM ALTERNATIVE BRACING, RE-RUN DESIGN WITH APPROPRIATE BRACING.

WEB MEMBER SIZE	SPECIFIED CLB BRACING	ALTERNATIVE BRACING T OR L-BRACE	ALTERNATIVE BRACING SCAB BRACE
2X3 OR 2X4	1 ROW	2X4	1-2X4
2X3 OR 2X4	2 ROWS	2X6	2-2X4
2X6	1 ROW	2X4	1-2X6
2X6	2 ROWS	2X6	2-2X4(*)
2X8	1 ROW	2X6	1-2X8
2X8	2 ROWS	2X6	2-2X6(*)

T-BRACE, L-BRACE AND SCAB BRACE TO BE SAME SPECIES AND GRADE OR BETTER THAN WEB MEMBER UNLESS SPECIFIED OTHERWISE ON ENGINEER'S SEALED DESIGN.

(*) CENTER SCAB ON WIDE FACE OF WEB. APPLY (1) SCAB TO EACH FACE OF WEB.

T-BRACING OR L-BRACING:

APPLY TO EITHER SIDE OF WEB NARROW FACE.
ATTACH WITH 10d BOX OR GUN
(0.128"x 3.",MIN) NAILS.
AT 6" O.C.
BRACE IS A
MINIMUM 80% OF WEB
MEMBER LENGTH

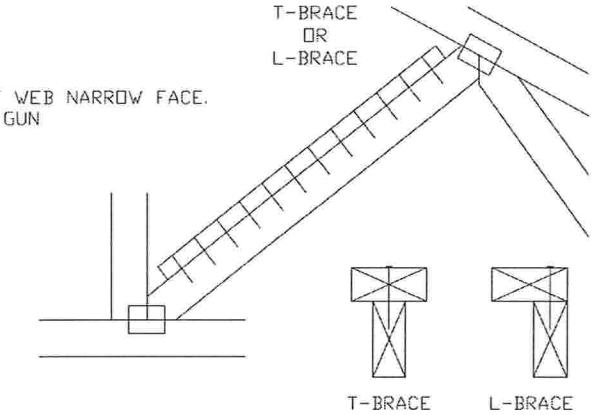

SCAB BRACING:

APPLY SCAB(S) TO WIDE FACE OF WEB.
NO MORE THAN (1) SCAB PER FACE.
ATTACH WITH 10d BOX OR GUN
(0.128"x 3.",MIN) NAILS.
AT 6" O.C.
BRACE IS A MINIMUM
80% OF WEB MEMBER LENGTH

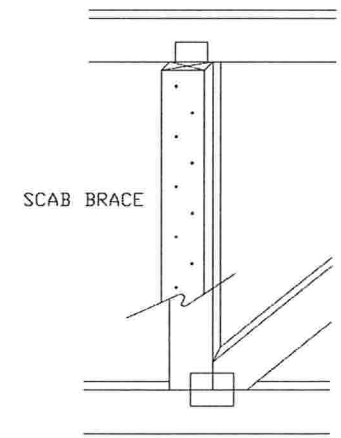

WILLIAM H. KRICK
LICENSE
No. 70861
STATE OF FLORIDA
PROFESSIONAL ENGINEER
03/18/2013
Mar 18 '13

TW
Building Components Group Inc.
Earth City, MO 63045

WARNING READ AND FOLLOW ALL NOTES ON THIS SHEET!
Trusses require extreme care in fabricating, handling, shipping, installing and bracing. Refer to and follow BCSI (Building Component Safety Information, by TPI and WTCA) for safety practices prior to performing these functions. Installers shall provide temporary bracing per BCSI. Unless noted otherwise, top chord shall have properly attached structural panels and bottom chord shall have a properly attached rigid ceiling. Locations shown for permanent lateral restraint of webs shall have bracing installed per BCSI sections B3 & B7. See this job's general notes page for more information.

IMPORTANT FURNISH COPY OF THIS DESIGN TO INSTALLATION CONTRACTOR.
ITW Building Components Group Inc. (ITWBCG) shall not be responsible for any deviation from this design, any failure to build the truss in conformance with TPI, or fabricating, handling, shipping, installing & bracing of trusses. ITWBCG connector plates are made of 20/18/16GA (W,H/S/K) ASTM A653 grade 37/40/60 (K/W/H,S) galv. steel. Apply plates to each face of truss, positioned as shown above and on Joint Details.
A seal on this drawing or cover page indicates acceptance and professional engineering responsibility solely for the truss component design shown. The suitability and use of this component for any building is the responsibility of the Building Designer per ANSI/TPI 1 Sec. 2.
ITW-BCG: www.itwbcg.com; TPI: www.tpinst.com; WTCA: www.sbcindustry.com; ICC: www.iccsafe.org

TC LL	PSF	REF CLB SUBST.
TC DL	PSF	DATE 1/1/09
BC DL	PSF	DRWG BRCLBSUB0109
BC LL	PSF	
TOT. LD.	PSF	
DUR. FAC.		
SPACING		

Gable Stud Reinforcement Detail

ASCE 7-10: 120 mph Wind Speed, 15' Mean Height, Enclosed, Exposure C, Kzt = 1.00

Or: 100 mph Wind Speed, 15' Mean Height, Partially Enclosed, Exposure C, Kzt = 1.00
Or: 100 mph Wind Speed, 15' Mean Height, Enclosed, Exposure D, Kzt = 1.00

Max Gable Vertical Length	2x4 Gable Vertical Spacing	Species	Brace Grade	No Braces	(1) 1x4 'L' Brace * Group A	(1) 1x4 'L' Brace * Group B	(1) 2x4 'L' Brace * Group A	(1) 2x4 'L' Brace * Group B	(2) 2x4 'L' Brace ** Group A	(2) 2x4 'L' Brace ** Group B	(1) 2x6 'L' Brace * Group A	(1) 2x6 'L' Brace * Group B	(2) 2x6 'L' Brace ** Group A	(2) 2x6 'L' Brace ** Group B
	24" o.c.	SPF HF	#1 / #2	4' 10"	8' 2"	8' 6"	9' 8"	10' 1"	11' 6"	12' 0"	14' 0"	14' 0"	14' 0"	14' 0"
			#3	4' 7"	7' 9"	8' 3"	9' 7"	9' 11"	11' 5"	11' 10"	14' 0"	14' 0"	14' 0"	14' 0"
			Stud	4' 7"	8' 1"	8' 4"	9' 7"	9' 11"	11' 5"	11' 10"	14' 0"	14' 0"	14' 0"	14' 0"
			Standard	4' 7"	8' 1"	8' 4"	9' 7"	9' 11"	11' 5"	11' 10"	14' 0"	14' 0"	14' 0"	14' 0"
		SP DFL	#1	4' 11"	8' 3"	8' 7"	9' 9"	10' 1"	11' 7"	12' 1"	14' 0"	14' 0"	14' 0"	14' 0"
			#2	4' 10"	8' 2"	8' 6"	9' 8"	10' 1"	11' 6"	12' 0"	14' 0"	14' 0"	14' 0"	14' 0"
			#3	4' 7"	6' 11"	7' 4"	9' 3"	9' 10"	11' 5"	11' 10"	14' 0"	14' 0"	14' 0"	14' 0"
			Stud	4' 7"	6' 11"	7' 4"	9' 3"	9' 10"	11' 5"	11' 10"	14' 0"	14' 0"	14' 0"	14' 0"
			Standard	4' 7"	6' 0"	6' 4"	8' 0"	8' 6"	10' 10"	11' 7"	12' 6"	13' 5"	14' 0"	14' 0"
	16" o.c.	SPF HF	#1 / #2	5' 6"	9' 5"	9' 9"	11' 1"	11' 6"	13' 2"	13' 9"	14' 0"	14' 0"	14' 0"	14' 0"
			#3	5' 3"	9' 3"	9' 9"	10' 11"	11' 4"	13' 0"	13' 7"	14' 0"	14' 0"	14' 0"	14' 0"
			Stud	5' 3"	9' 3"	9' 7"	10' 11"	11' 4"	13' 0"	13' 7"	14' 0"	14' 0"	14' 0"	14' 0"
			Standard	5' 3"	9' 3"	9' 7"	10' 11"	11' 4"	13' 0"	13' 7"	14' 0"	14' 0"	14' 0"	14' 0"
		SP DFL	#1	5' 8"	9' 5"	9' 10"	11' 2"	11' 7"	13' 3"	13' 10"	14' 0"	14' 0"	14' 0"	14' 0"
			#2	5' 6"	9' 5"	9' 9"	11' 1"	11' 6"	13' 2"	13' 9"	14' 0"	14' 0"	14' 0"	14' 0"
			#3	5' 3"	8' 6"	9' 0"	10' 11"	11' 4"	13' 0"	13' 7"	14' 0"	14' 0"	14' 0"	14' 0"
			Stud	5' 3"	8' 6"	9' 0"	10' 11"	11' 4"	13' 0"	13' 7"	14' 0"	14' 0"	14' 0"	14' 0"
			Standard	5' 3"	7' 4"	7' 10"	9' 9"	10' 5"	13' 0"	13' 7"	14' 0"	14' 0"	14' 0"	14' 0"
	12" o.c.	SPF HF	#1 / #2	6' 1"	10' 4"	10' 8"	12' 2"	12' 8"	13' 2"	14' 0"	14' 0"	14' 0"	14' 0"	14' 0"
			#3	5' 9"	10' 2"	10' 7"	12' 0"	12' 6"	14' 0"	14' 0"	14' 0"	14' 0"	14' 0"	14' 0"
			Stud	5' 9"	10' 2"	10' 7"	12' 0"	12' 6"	14' 0"	14' 0"	14' 0"	14' 0"	14' 0"	14' 0"
			Standard	5' 9"	10' 2"	10' 7"	12' 0"	12' 6"	14' 0"	14' 0"	14' 0"	14' 0"	14' 0"	14' 0"
		SP DFL	#1	6' 2"	10' 5"	10' 9"	12' 3"	12' 9"	14' 0"	14' 0"	14' 0"	14' 0"	14' 0"	14' 0"
			#2	6' 1"	10' 4"	10' 8"	12' 2"	12' 8"	14' 0"	14' 0"	14' 0"	14' 0"	14' 0"	14' 0"
			#3	5' 9"	9' 9"	10' 5"	12' 0"	12' 6"	14' 0"	14' 0"	14' 0"	14' 0"	14' 0"	14' 0"
			Stud	5' 9"	9' 9"	10' 5"	12' 0"	12' 6"	14' 0"	14' 0"	14' 0"	14' 0"	14' 0"	14' 0"
			Standard	5' 9"	8' 6"	9' 0"	11' 3"	12' 1"	14' 0"	14' 0"	14' 0"	14' 0"	14' 0"	14' 0"

Bracing Group Species and Grades:

Group A:

Spruce-Pine-Fir: #1 / #2 Standard; #3 Stud

Hem-Fir: #2 Stud; #3 Standard

Douglas Fir-Larch: #3; Stud; Standard

Southern Pine***: #3; Stud; Standard

Group B:

Hem-Fir: #1 & Btr; #1

Douglas Fir-Larch: #1; #2

Southern Pine***: #1; #2

1x4 Braces shall be SRB (Stress-Rated Board).

***For 1x4 So. Pine use only Industrial 55 or Industrial 45 Stress-Rated Boards. Group B values may be used with these grades.

Gable Truss Detail Notes:

Wind Load deflection criterion is L/240.

Provide uplift connections for 35 plf over continuous bearing (5 psf TC Dead Load).

Gable end supports load from 4' 0" outlookers with 2' 0" overhang, or 12" plywood overhang.

So. Pine lumber design values based on the ALSC January, 2012 ruln

Attach 'L' braces with 10d (0.128"x3.0" min) nails.

* For (1) 'L' brace: space nails at 2" o.c. in 18" end zones and 4" o.c. between zones.

** For (2) 'L' braces: space nails at 3" o.c. in 18" end zones and 6" o.c. between zones.

'L' bracing must be a minimum of 80% of web member length.

Gable Vertical Plate Sizes	
Vertical Length	No Splice
Less than 4' 0"	1X4 or 2X3
Greater than 4' 0", but less than 11' 6"	2X4
Greather than 11' 6"	2.5X4

+ Refer to common truss design for peak, splice, and heel plates.

Refer to the Building Designer for conditions not addressed by this detail.

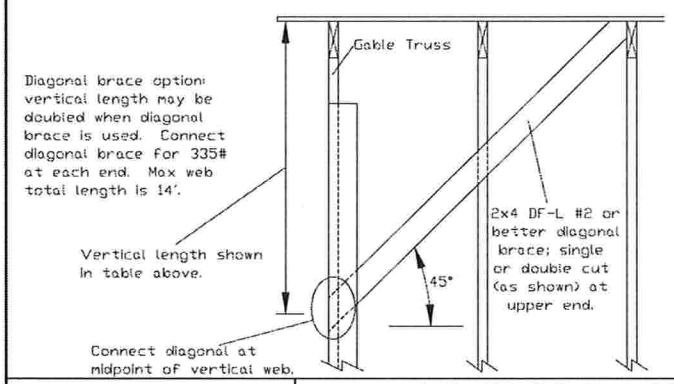

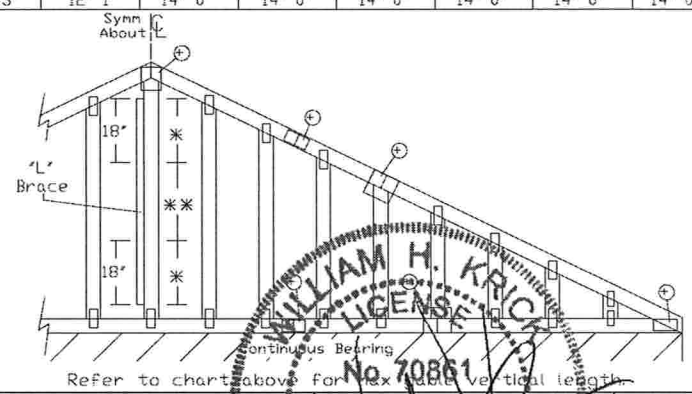

WARNING READ AND FOLLOW ALL NOTES ON THIS DRAWING!
IMPORTANT FURNISH THIS DRAWING TO ALL CONTRACTORS INCLUDING THE INSTALLERS.

Trusses require extreme care in fabricating, handling, shipping, installing and bracing. Refer to and follow the latest edition of BCSI (Building Component Safety Information, by TPI and WTCA) for safety practices prior to performing these functions. Installers shall provide temporary bracing per BCSI. Unless noted otherwise, top chord shall have properly attached structural sheathing and bottom chord shall have a properly attached rigid ceiling. Locations shown for permanent lateral restraint of webs shall have bracing installed per BCSI sections B3, B7 or B10, as applicable. Apply plates to each face of truss and position as shown above and on the Joint Details, unless noted otherwise. Refer to drawings 160A-Z for standard plate positions.

ITW Building Components Group Inc. shall not be responsible for any deviation from this drawing, any failure to build the truss in conformance with ANSI/TPI 1, or for handling, shipping, installation & bracing of trusses. A seal on this drawing or cover page listing this drawing, indicates acceptance of professional engineering responsibility solely for the design shown. The suitability and use of this drawing for any structure is the responsibility of the Building Designer per ANSI/TPI 1 Sec.2. For more information see this job's general notes page and these web sites: ITWBCG: www.itwbcg.com; TPI: www.tpinst.org; WTCA: www.sbcindustry.org; ICC: www.iccsafe.org

ITW Building Components Group Inc.
Earth City, MO 63045

WILLIAM H. KRICK LICENSE No. 70861 STATE OF FLORIDA PROFESSIONAL ENGINEER
03/18/2013
Mar 18 '13

MAX. TOT. LD. 60 PSF
MAX. SPACING 24.0"

REF ASCE7-10-GAB12015
DATE 2/14/12
DRWG A12015ENC100212

Gable Detail

For Let-in Verticals

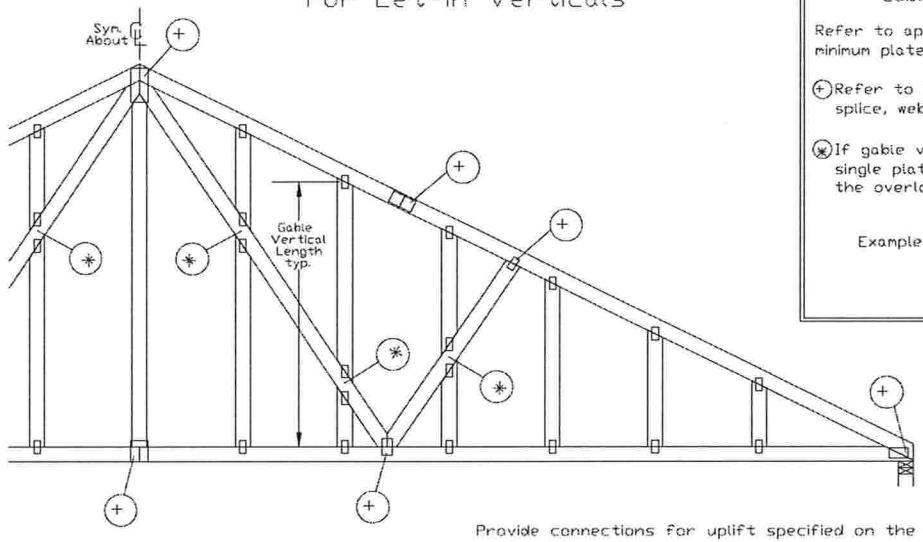

Gable Truss Plate Sizes

Refer to appropriate ITW gable detail for minimum plate sizes for vertical studs.

(+) Refer to Engineered truss design for peak, splice, web, and heel plates.

(*) If gable vertical plates overlap, use a single plate that covers the total area of the overlapped plates to span the web.

Example:

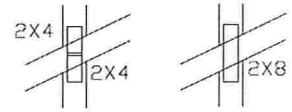

'T' Reinforcement Attachment Detail

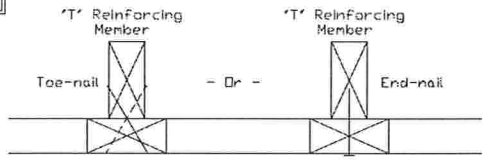

Provide connections for uplift specified on the engineered truss design.

Attach each 'T' reinforcing member with

End Driven Nails:
10d Common (0.148"x 3.",min) Nails at 4" o.c. plus
(4) nails in the top and bottom chords.

Toenailed Nails:
10d Common (0.148"x3",min) Toenails at 4" o.c. plus
(4) toenails in the top and bottom chords.

This detail to be used with the appropriate ITW gable detail for ASCE wind load.

ASCE 7-98 Gable Detail Drawings
A13015980109, A12015980109, A11015980109, A10015980109,
A13030980109, A12030980109, A11030980109, A10030980109

ASCE 7-02 Gable Detail Drawings
A13015020109, A12015020109, A11015020109, A10015020109, A14015020109,
A13030020109, A12030020109, A11030020109, A10030020109, A14030020109

ASCE 7-05 Gable Detail Drawings
A13015050109, A12015050109, A11015050109, A10015050109, A14015050109,
A13030050109, A12030050109, A11030050109, A10030050109, A14030050109

ASCE 7-10 Gable Detail Drawings
A11515ENC100212, A12015ENC100212, A14015ENC100212, A16015ENC100212,
A18015ENC100212, A20015ENC100212, A20015ENC100212, A20015ED100212,
A11530ENC100212, A12030ENC100212, A14030ENC100212, A16030ENC100212,
A18030ENC100212, A20030ENC100212, A20030ENC100212, A20030ED100212

See appropriate ITW gable detail for maximum unreinforced gable vertical length.

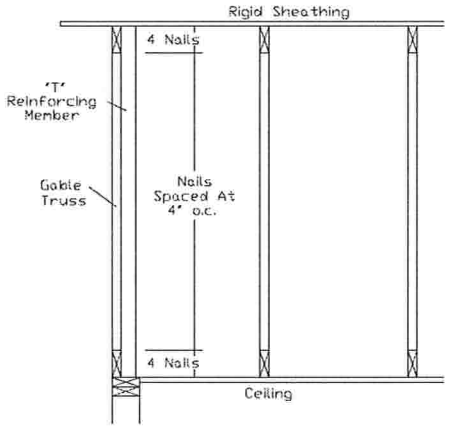

To convert from 'L' to 'T' reinforcing members, multiply 'T' increase by length (based on appropriate ITW gable detail).

Maximum allowable 'T' reinforced gable vertical length is 14' from top to bottom chord.

'T' reinforcing member material must match size, specie, and grade of the 'L' reinforcing member.

Web Length Increase w/ "T" Brace

'T' Reinf. Mbr. Size	'T' Increase
2x4	30 %
2x6	20 %

Example:
ASCE 7-10 Wind Speed = 120 mph
Mean Roof Height = 30 ft, Kzt = 1.00
Gable Vertical = 24"o.c. SP #3
'T' Reinforcing Member Size = 2x4
'T' Brace Increase (From Above) = 30% = 1.30
(1) 2x4 'L' Brace Length = 8' 7"
Maximum 'T' Reinforced Gable Vertical Length
1.30 x 8' 7" = 11' 2"

WILLIAM H. KRICK
LICENSED
No. 70861
STATE OF FLORIDA
PROFESSIONAL ENGINEER
03/18/2013

Mar 18 '13

TW
Building Components Group Inc.
Earth City, MO 63045

WARNING READ AND FOLLOW ALL NOTES ON THIS DRAWING!
IMPORTANT FURNISH THIS DRAWING TO ALL CONTRACTORS INCLUDING THE INSTALLERS.

Trusses require extreme care in fabricating, handling, shipping, installing and bracing. Refer to and follow the latest edition of BCSI (Building Component Safety Information, by TPI and WTCA) for safety practices prior to performing these functions. Installers shall provide temporary bracing per BCSI. Unless noted otherwise, top chord shall have properly attached structural sheathing and bottom chord shall have a properly attached rigid ceiling. Locations shown for permanent lateral restraint of webs shall have bracing installed per BCSI sections B3, B7 or B10, as applicable. Apply plates to each face of truss and position as shown above and on the Joint Details, unless noted otherwise. Refer to drawings 160A-Z for standard plate positions.

ITW Building Components Group Inc. shall not be responsible for any deviation from this drawing, any failure to build the truss in conformance with ANSI/TPI 1, or for handling, shipping, installation & bracing of trusses. A seal on this drawing or cover page listing this drawing, indicates acceptance of professional engineering responsibility solely for the design shown. The suitability and use of this drawing for any structure is the responsibility of the Building Designer per ANSI/TPI 1 Sec.2.
For more information see this job's general notes page and these web sites:
ITWBCG: www.itwbcg.com; TPI: www.tpinst.org; WTCA: www.sbcindustry.org; ICC: www.iccsafe.or

MAX. TOT. LD.	60 PSF
DUR. FAC.	ANY
MAX. SPACING	24.0"

REF	LET-IN VERT
DATE	2/16/12
DRWG	GBLLETIN0212

ASCE 7-10: 120 mph, 30' Mean Height, Closed, Exposure C
Common Residential Gable End Wind Bracing Requirements - Stiffeners

120 mph, 30ft. Mean Hgt, ASCE 7-10, Enclosed, Exp C, or
100 mph, 30ft. Mean Hgt, ASCE 7-10, Enclosed, Exp D, or
100 mph, 30ft. Mean Hgt, ASCE 7-10, Part. Enclosed, Exp C,
Kzt = 1.00, Wind TC DL=5.0 psf, Wind BC DL=5.0 psf.

Lateral chord bracing requirements
Top: Continuous roof sheathing
Bot: Continuous ceiling diaphragm

See Engineer's sealed design referencing this detail for lumber, plates, and other information not shown on this detail.

Nails: 10d box or gun (0.128"x3",min) nails.

H Less than 4'6" - no stud bracing required

H Greater than 4'6" to 7'6" in length provide a 2x6 stiffback at mid-height and brace stiffback to roof diaphragm every 6'0" (see detail below or refer to DRWG A12030ENC10).

H Greater than 7'6" to 12'0" max: provide a 2x6 stiffback at mid-height and brace to roof diaphragm every 4'0" (see detail below or refer to DRWG A12030ENC10).

✳ Optional 2x L-reinforcement attached to stiffback with 10d box or gun (0.128" x 3", min.) nails @ 6" o.c.

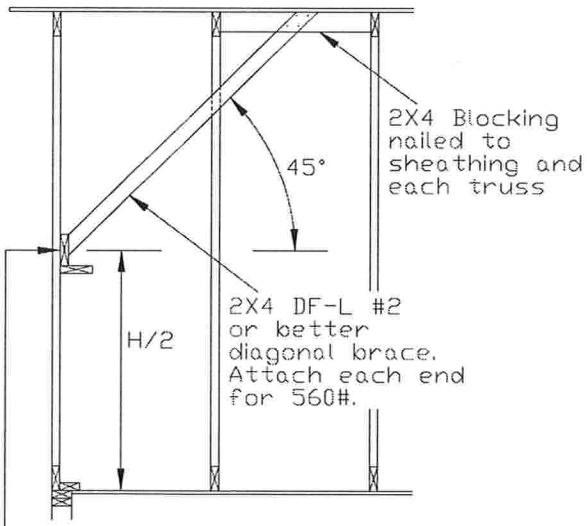

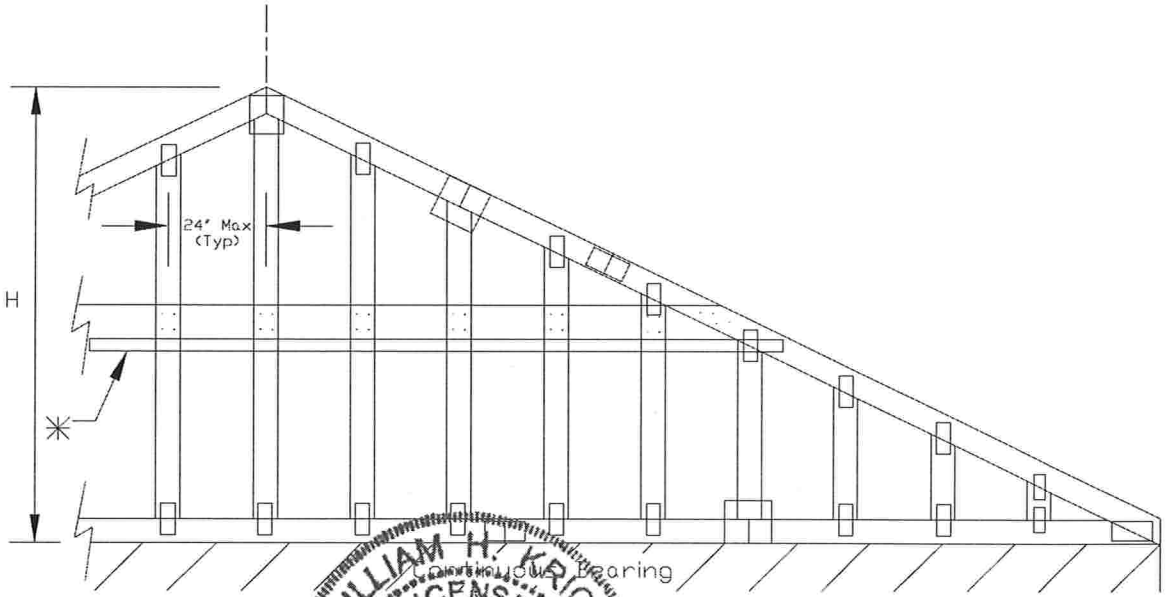

WILLIAM H. KRICK
LICENSE
No. 70861
STATE OF FLORIDA
PROFESSIONAL ENGINEER
03/18/2013

Mar 18 '13

TW
Building Components Group Inc.
Earth City, MO 63045

WARNING READ AND FOLLOW ALL NOTES ON THIS DRAWING!
IMPORTANT FURNISH THIS DRAWING TO ALL CONTRACTORS INCLUDING THE INSTALLERS.

Trusses require extreme care in fabricating, handling, shipping, installing and bracing. Refer to and follow the latest edition of BCSI (Building Component Safety Information, by TPI and WTCA) for handling practices prior to performing these functions. Installers shall provide temporary bracing per BCSI. Unless noted otherwise, top chord shall have properly attached structural sheathing and bottom chord shall have a properly attached rigid ceiling. Locations shown for permanent lateral restraint of webs shall have bracing installed per BCSI sections B3, B7 or B10, as applicable. Apply plates to each face of truss and position as shown above and on the Joint Details, unless noted otherwise. Refer to drawings 160A-Z for standard plate positions.

ITW Building Components Group Inc. shall not be responsible for any deviation from this drawing, any failure to build the truss in conformance with ANSI/TPI 1, or for handling, shipping, installation & bracing of trusses. A seal on this drawing or cover page listing this drawing, indicates acceptance of professional engineering responsibility solely for the design shown. The suitability and use of this drawing for any structure is the responsibility of the Building Designer per ANSI/TPI 1 Sec.2.
For more information see this job's general notes page and these web sites:
ITWBCG: www.itwbcg.com; TPI: www.tpinst.org; WTCA: www.sbcindustry.org; ICC: www.iccsafe.or

MAX. TOT. LD. 60 PSF

MAX. SPACING

REF	GE WHALER
DATE	2/14/12
DRWG	GABRST100212

NAIL SPACING DETAIL

MINIMUM SPACING FOR SINGLE BLOCK IS SHOWN. DOUBLE NAIL SPACINGS AND STAGGER NAILING FOR TWO BLOCKS. GREATER SPACING MAY BE REQUIRED TO AVOID SPLITTING.

BLOCK LOCATION, SIZE, LENGTH,GRADE AND TOTAL NUMBER AND TYPE OF NAILS ARE TO BE SPECIFIED ON SEALED DESIGN REFERENCING THIS DETAIL.

LOAD PERPENDICULAR TO GRAIN
A - EDGE DISTANCE AND SPACING BETWEEN STAGGERED ROWS OF NAILS (6 NAIL DIAMETERS)
B - SPACING OF NAILS IN A ROW (12 NAIL DIAMETERS)
C - END DISTANCE (15 NAIL DIAMETERS)

LOAD PARALLEL TO GRAIN
A - EDGE DISTANCE (6 NAIL DIAMETERS)
C - SPACING OF NAILS IN A ROW AND END DISTANCE (15 NAIL DIAMETERS)
D - SPACING BETWEEN STAGGERED ROWS OF NAILS (7 1/2 NAIL DIAMETERS)

IF NAIL HOLES ARE PREBORED, SOME SPACING MAY BE REDUCED BY THE AMOUNTS GIVEN BELOW:
* SPACING MAY BE REDUCED BY 50%
** SPACING MAY BE REDUCED BY 33%

MINIMUM NAIL SPACING DISTANCES

NAIL TYPE	DISTANCES A	B*	C**	D
8d BOX (0.113"X 2.5",MIN)	3/4"	1 3/8"	1 3/4"	7/8"
10d BOX (0.128"X 3.",MIN)	7/8"	1 5/8"	2"	1"
12d BOX (0.128"X 3.25",MIN)	7/8"	1 5/8"	2"	1"
16d BOX (0.135"X 3.5",MIN)	7/8"	1 5/8"	2 1/8"	1 1/8"
20d BOX (0.148"X 4.",MIN)	1"	1 7/8"	2 1/4"	1 1/8"
8d COMMON (0.131"X 2.5",MIN)	7/8"	1 5/8"	2"	1"
10d COMMON (0.148"X 3.",MIN)	1"	1 7/8"	2 1/4"	1 1/8"
12d COMMON (0.148"X 3.25",MIN)	1"	1 7/8"	2 1/4"	1 1/8"
16d COMMON (0.162"X 3.5",MIN)	1'	2"	2 1/2"	1 1/4"
GUN (0.120"X 2.5",MIN)	3/4"	1 1/2"	1 7/8"	1"
GUN (0.131"X 2.5",MIN)	7/8"	1 5/8"	2"	1"
GUN (0.120"X 3.",MIN)	3/4"	1 1/2"	1 7/8"	1"
GUN (0.131"X 3.",MIN)	7/8"	1 5/8"	2"	1"

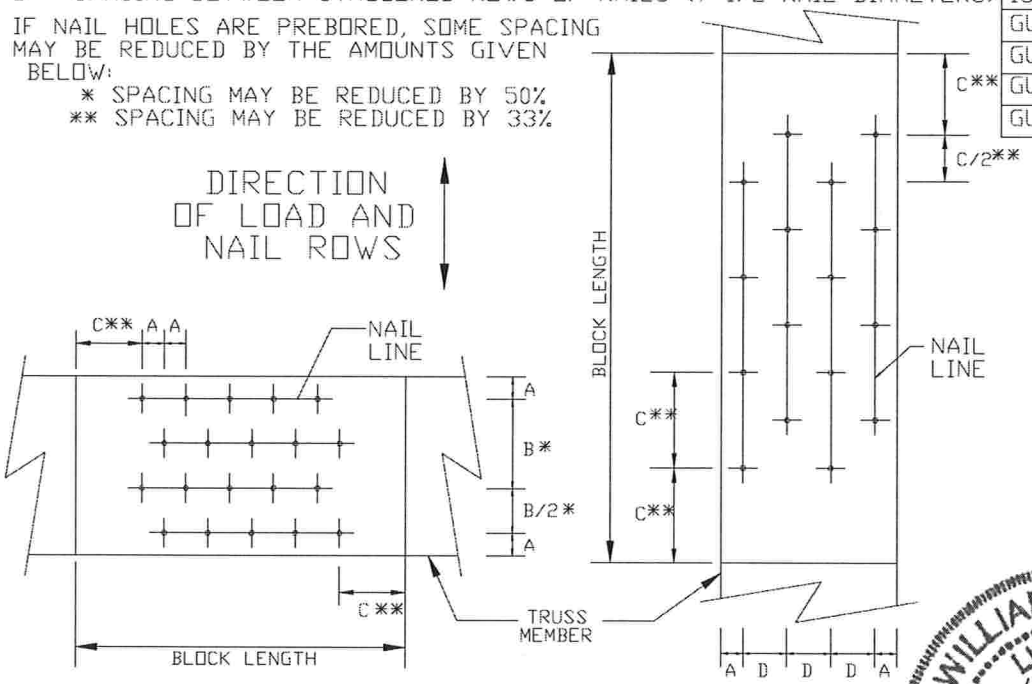

LOAD APPLIED PERPENDICULAR TO GRAIN LOAD APPLIED PARALLEL TO GRAIN

WILLIAM H. KRICK
LICENSE
No. 70861
STATE OF FLORIDA
PROFESSIONAL ENGINEER
03/18/2013
Mar 18 '13

TW
Building Components Group Inc.
Earth City, MO 63045

WARNING READ AND FOLLOW ALL NOTES ON THIS SHEET!
Trusses require extreme care in fabricating, handling, shipping, installing and bracing. Refer to and follow BCSI (Building Component Safety Information, by TPI and WTCA) for safety practices prior to performing these functions. Installers shall provide temporary bracing per BCSI. Unless noted otherwise, top chord shall have properly attached structural panels and bottom chord shall have properly attached rigid ceiling. Locations shown for permanent lateral restraint of webs shall have bracing installed per BCSI sections B3 & B7. See this job's general notes page for more information.

IMPORTANT FURNISH COPY OF THIS DESIGN TO INSTALLATION CONTRACTOR.
ITW Building Components Group Inc. (ITWBCG) shall not be responsible for any deviation from this design, any failure to build the truss in conformance with TPI, or fabricating, handling, shipping, installing & bracing of trusses. ITWBCG connector plates are made of 20/18/16GA (W,H/S/K) ASTM A653 grade 37/40/60 (K/W/H,S) galv. steel. Apply plates to each face of truss, positioned as shown above and on Joint Details.
A seal on this drawing or cover page indicates acceptance and professional engineering responsibility solely for the truss component design shown. The suitability and use of this component for any building is the responsibility of the Building Designer per ANSI/TPI 1 Sec. 2.
ITW-BCG: www.itwbcg.com; TPI: www.tpinst.com; WTCA: www.sbcindustry.com; ICC: www.iccsafe.org

REF	NAIL SPACE
DATE	1/1/09
DRWG	CNNAILSP0109