DATE 07/13/2009

Columbia County Building Permit

This Permit Must Be Prominently Posted on Premises During Construction

PERMIT
000027942

APPLICANT TED BROCK PHONE 904 296-1490

ADDRESS 6800 SOUTH POINT PARKWAY #300 JACKSONVILLE FL 32216

OWNER MARONDA HOMES PHONE 904 296-1490

ADDRESS 330 SW MULBERRY DRIVE LAKE CITY FL 32024

CONTRACTOR TED BROCK PHONE 904 296-1490

LOCATION OF PROPERTY 90W, TL ON 247S, TR ON CR 252B, TL ON TIMBER RIDGE DR., TL ON MULBERRY, 8TH LOT ON RIGHT

TYPE DEVELOPMENT SFD,UTILITY ESTIMATED COST OF CONSTRUCTION 162600.00

HEATED FLOOR AREA 2827.00 TOTAL AREA 3252.00 HEIGHT ____ STORIES 1

FOUNDATION CONC WALLS FRAMED ROOF PITCH 5/12 FLOOR SLAB

LAND USE & ZONING RSF-2 MAX. HEIGHT 26

Minimum Set Back Requirments: STREET-FRONT 25.00 REAR 15.00 SIDE 10.00

NO. EX.D.U. 0 FLOOD ZONE X DEVELOPMENT PERMIT NO. ____

PARCEL ID 10-4S-16-02856-131 SUBDIVISION TIMBERLANDS

LOT 31 BLOCK ____ PHASE ____ UNIT ____ TOTAL ACRES 0.50

Culvert Permit No.	Culvert Waiver	Contractor's License Number	Applicant/Owner/Contractor	
000001739		CBC1256382		
Driveway Connection	**Septic Tank Number**	**LU & Zoning checked by**	**Approved for Issuance**	**New Resident**
CULVERT	09-337	BK	WR	Y

COMMENTS: MFE @ 93', ELEVATION CONFIRMATION LETTER REQUIRED AT SLAB, NOC ON FILE

Check # or Cash 1001552

FOR BUILDING & ZONING DEPARTMENT ONLY

(footer/Slab)

Temporary Power ____ date/app. by Foundation ____ date/app. by Monolithic ____ date/app. by

Under slab rough-in plumbing ____ date/app. by Slab ____ date/app. by Sheathing/Nailing ____ date/app. by

Framing ____ date/app. by Insulation ____ date/app. by

Rough-in plumbing above slab and below wood floor ____ date/app. by Electrical rough-in ____ date/app. by

Heat & Air Duct ____ date/app. by Peri. beam (Lintel) ____ date/app. by Pool ____ date/app. by

Permanent power ____ date/app. by C.O. Final ____ date/app. by Culvert ____ date/app. by

Pump pole ____ date/app. by Utility Pole ____ date/app. by M/H tie downs, blocking, electricity and plumbing ____ date/app. by

Reconnection ____ date/app. by RV ____ date/app. by Re-roof ____ date/app. by

BUILDING PERMIT FEE $ 815.00 CERTIFICATION FEE $ 16.26 SURCHARGE FEE $ 16.26

MISC. FEES $ 0.00 ZONING CERT. FEE $ 50.00 FIRE FEE $ 0.00 WASTE FEE $ ____

FLOOD DEVELOPMENT FEE $ ____ FLOOD ZONE FEE $ 25.00 CULVERT FEE $ 25.00 **TOTAL FEE** 947.52

INSPECTORS OFFICE ____ CLERKS OFFICE CH

NOTICE: IN ADDITION TO THE REQUIREMENTS OF THIS PERMIT, THERE MAY BE ADDITIONAL RESTRICTIONS APPLICABLE TO THIS PROPERTY THAT MAY BE FOUND IN THE PUBLIC RECORDS OF THIS COUNTY. AND THERE MAY BE ADDITIONAL PERMITS REQUIRED FROM OTHER GOVERNMENTAL ENTITIES SUCH AS WATER MANAGEMENT DISTRICTS, STATE AGENCIES, OR FEDERAL AGENCIES.

"WARNING TO OWNER: YOUR FAILURE TO RECORD A NOTICE OF COMMENCEMENT MAY RESULT IN YOUR PAYING TWICE FOR IMPROVEMENTS TO YOUR PROPERTY. IF YOU INTEND TO OBTAIN FINANCING, CONSULT WITH YOUR LENDER OR AN ATTORNEY BEFORE RECORDING YOUR NOTICE OF COMMENCEMENT."

EVERY PERMIT ISSUED SHALL BECOME INVALID UNLESS THE WORK AUTHORIZED BY SUCH PERMIT IS COMMENCED WITHIN 180 DAYS AFTER ITS ISSUANCE, OR IF THE WORK AUTHORIZED BY SUCH PERMIT IS SUSPENDED OR ABANDONED FOR A PERIOD OF 180 DAYS AFTER THE TIME THE WORK IS COMMENCED. A VALID PERMIT RECIEVES AN APPROVED INSPECTION EVERY 180 DAYS. WORK SHALL BE CONSIDERED NOT SUSPENDED, ABANDONED OR INVALID WHEN THE PERMIT HAS RECIEVED AN APPROVED INSPECTION WITHIN 180 DAYS OT THE PREVIOUS INSPECTION.

The Issuance of this Permit Does Not Waive Compliance by Permittee with Deed Restrictions.

1001552 31/1

Columbia County Building Permit Application

For Office Use Only Application # 0906-52 Date Received _____ By _____ Permit # 1739/27942

Zoning Official BLK Date 08.07.09 Flood Zone X Land Use RES. LOW DEN Zoning RSF-2

FEMA Map # N/A Elevation N/A MFE 93' per plot River N/A Plans Examiner CWR Date 7/6/09

Comments Elevation Confirmation Letter Required at Slab

☐ NOC ☑ EH ☑ Deed or PA ☑ Site Plan ☐ State Road Info ☐ Parent Parcel # _____

☐ Dev Permit # _____ ☐ In Floodway ☑ Letter of Auth. from Contractor ☐ F W Comp. letter

IMPACT FEES: EMS _____ Fire _____ Corr _____ Road/Code _____

School _____ = TOTAL Suspended

Septic Permit No. _____ Fax (904) 332-6375

Name Authorized Person Signing Permit TED BROCK / ROGER BONIFANT Phone (904) 296-1490

Address 6800 SOUTH POINT PKWY # 300 JAX. FL 32216

Owners Name MARONDA HOMES INC. OF FL Phone 904. 296-1490

911 Address 330 SW MULBERRY DR. LAKE CITY FL 32024

Contractors Name THEODORE C. BROCK Phone 904-296-1490

Address 6800 SOUTHPOINT PKWY #300 JAX. FL 32216

Fee Simple Owner Name & Address N/A

Bonding Co. Name & Address N/A

Architect/Engineer Name & Address THOMAS PONCE 4005 MARONDA WAY, SANFORD FL, 32771

Mortgage Lenders Name & Address BANK OF AMERICA 250 PARK AVE. S #400 WINTER PARK FL 32789

Circle the correct power company – FL Power & Light – (Clay Elec.) – Suwannee Valley Elec. – Progress Energy

Property ID Number 10-45-16-02856-131 Estimated Cost of Construction $126,810

Subdivision Name TIMBERLANDS Lot 31 Block ✓ Unit ✓ Phase 1

Driving Directions HWY 90, LEFT ON 247 SOUTH, RIGHT ON 252B, LEFT ON TIMBER RIDGE DR. TURN LEFT ON TO SW MULBERRY DR. 8th LOT ON RIGHT Number of Existing Dwellings on Property Ø

Construction of RESIDENTIAL SINGLE FAMILY Total Acreage .5 Lot Size 136X160

Do you need a - Culvert Permit or Culvert Waiver or Have an Existing Drive Total Building Height 26'

Actual Distance of Structure from Property Lines - Front 26' Side 48' Side 48' Rear 85'-3"

Number of Stories 2 Heated Floor Area 2827 Total Floor Area 3252 Roof Pitch 5/12

Application is hereby made to obtain a permit to do work and installations as indicated. I certify that no work or installation has commenced prior to the issuance of a permit and that all work be performed to meet the standards of all laws regulating construction in this jurisdiction.

$947.52 Email 7/8/09

Columbia County Building Permit Application

TIME LIMITATIONS OF APPLICATION : An application for a permit for any proposed work shall be deemed to have been abandoned 180 days after the date of filing, unless such application has been pursued in good faith or a permit has been issued; except that the building official is authorized to grant one or more extensions of time for additional periods not exceeding 90 days each. The extension shall be requested in writing and justifiable cause demonstrated.

FLORIDA'S CONSTRUCTION LIEN LAW: Protect Yourself and Your Investment
According to Florida Law, those who work on your property or provide materials, and are not paid-in-full, have a right to enforce their claim for payment against your property. This claim is known as a construction lien. If your contractor fails to pay subcontractors or material suppliers or neglects to make other legally required payments, the people who are owed money may look to your property for payment, even if you have paid your contractor in full. This means if a lien is filed against your property, it could be sold against your will to pay for labor, materials or other services which your contractor may have failed to pay.

NOTICE OF RESPONSIBILITY TO BUILDING PERMITEE:
YOU ARE HEREBY NOTIFIED as the recipient of a building permit from Columbia County, Florida, you will be held responsible to the County for any damage to sidewalks and/or road curbs and gutters, concrete features and structures, together with damage to drainage facilities, removal of sod, major changes to lot grades that result in ponding of water, or other damage to roadway and other public infrastructure facilities caused by you or your contractor, subcontractors, agents or representatives in the construction and/or improvement of the building and lot for which this permit is issued. No certificate of occupancy will be issued until all corrective work to these public infrastructures and facilities has been corrected.

WARNING TO OWNER: YOUR FAILURE TO RECORD A NOTICE OF COMMENCMENT MAY RESULT IN YOU PAYING TWICE FOR IMPROVEMENTS TO YOUR PROPERTY. A NOTICE OF COMMENCEMENT MUST BE RECORDED AND POSTED ON THE JOB SITE BEFORE THE FIRST INSPECTION. IF YOU INTEND TO OBTAIN FINANCING, CONSULT WITH YOUR LENDER OR ATTORNEY BEFORE RECORDING YOUR NOTICE OF COMMENCEMENT.

OWNERS CERTIFICATION: I hereby certify that all the foregoing information is accurate and all work will be done in compliance with all applicable laws and regulating construction and zoning. I further understand the above written responsibilities in Columbia County for obtaining this Building Permit.

Owners Signature MARONDA HOMES, INC. OF FLORIDA
STEVE HOGG, V.P.

CONTRACTORS AFFIDAVIT: By my signature I understand and agree that I have informed and provided this written statement to the owner of all the above written responsibilities in Columbia County for obtaining this Building Permit.

6.25.09

Contractor's Signature (Permitee)
THEODORE BROCK

Contractor's License Number CBC1256382
Columbia County
Competency Card Number

Affirmed under penalty of perjury to by the Contractor and subscribed before me this 25th **day of** June **20**09

Personally known ✓ **or Produced Identification**

Gale Tedder

State of Florida Notary Signature (For the Contractor)

SEAL: GALE TEDDER
MY COMMISSION # DD 805686
EXPIRES: July 14, 2012
Bonded Thru Notary Public Underwriters

STATE OF FLORIDA
DEPARTMENT OF HEALTH

APPLICATION FOR ONSITE SEWAGE DISPOSAL SYSTEM CONSTRUCTION PERMIT

Permit Application Number D9-0337

PART II - SITE PLAN

Scale: Each block represents 5 feet and 1 inch = 50 feet.

SEE ATTACHED

Notes:

Site Plan submitted by: Signature 6-18-09 Title

Plan Approved X Not Approved Date 6/25/9

By APPROVED Columbia CHD County Health Department

ALL CHANGES MUST BE APPROVED BY THE COUNTY HEALTH DEPARTMENT

PROPOSED BUILDING LAYOUT

IN SECTION 10, TOWNSHIP 4 SOUTH, RANGE 16 EAST, COLUMBIA COUNTY, FLORIDA

30 0 30 60 90

1" = 30'

LEGAL DESCRIPTION:

LOT THIRTY-ONE (31) OF "TIMBERLANDS" AS PER PLAT THEREOF, AS RECORDED IN PLAT BOOK '9', PAGE 27 OF THE PUBLIC RECORDS OF COLUMBIA COUNTY, FLORIDA.

CERTIFIED TO:

1) MARONDA HOMES

BUILDING SETBACK NOTE:

BUILDING SETBACK INFORMATION FOR "TIMBERLANDS" IS AS FOLLOWS: FRONT 25', REAR 15', SIDE 10'

BENCHMARK NOTE:

ELEVATIONS SHOWN HEREON ARE BASED UPON A BENCHMARK SET IN A 6" PINE AT THE FRONT OF LOT 2, WITH AN ELEVATION OF 98.76'. THIS INFORMATION WAS PROVIDED TO THIS SURVEYOR BY BRITT SURVEYING (PLATTING SURVEYOR) DATUM UNKNOWN.

SURVEYOR NOTES:

1) TO THE BEST OF MY KNOWLEDGE, THERE ARE NO ENCROACHMENTS, BOUNDARY LINE DISPUTES, EASEMENTS, OR CLAIMS OF EASEMENTS, OTHER THAN ARE DEPICTED ON THIS DRAWING.
2) ALL UTILITIES AND OR IMPROVEMENTS, IF ANY, MAY NOT BE SHOWN ON THIS DRAWING.
3) IN THE OPINION OF THIS SURVEYOR THE BOUNDARY SHOWN HEREON BEST REPRESENTS THE LOCATION OF THE SUBJECT PROPERTY IN RELATION TO THE DESCRIPTION AND THOSE PROPERTY CORNERS FOUND TO BE ACCEPTABLE TO THIS SURVEYOR.
4) BUILDING SETBACK LINES DEPICTED HEREON ARE SHOWN AS PER THE RECORD PLAT, BUT ARE SUBJECT TO CHANGE. PRIOR TO ANY NEW CONSTRUCTION, THE APPROPRIATE GOVERNING AUTHORITY SHOULD BE CONTACTED FOR THE CURRENT SETBACK REQUIREMENTS.
5) THIS MAP OF SURVEY REFLECTS CONDITIONS LOCATED AS OF THE DATE OF FIELD WORK COMPLETION (SEE TITLE BLOCK).
6) AREAS OF ENVIRONMENTAL CONCERN HAVE NOT BEEN LOCATED BY THIS SURVEYOR, UNLESS OTHERWISE DEPICTED HEREON.

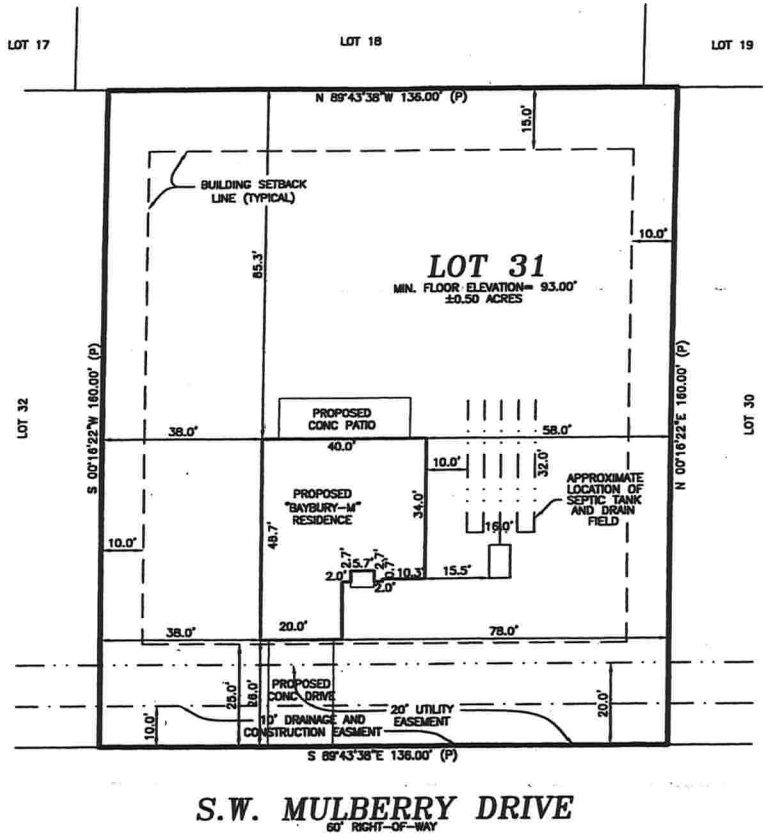

LEGEND:

- ● = FOUND 1/2" REBAR NO IDENTIFICATION
- ⊙ = FOUND 1/2" REBAR & CAP L.B. 6894
- ○ = SET 1/2" REBAR & CAP L.B. 6894
- ⊕ = FOUND 3/4" IRON PIPE
- ■ = FOUND 4" X 4" CONC. MON. NO IDENTIFICATION
- □ = SET 4" X 4" CONC. MON. P.S.M. 5582
- X = SET NAIL & DISK P.S.M. 5582
- X = FOUND NAIL & DISK
- ⊠ = FOUND 6" X 6" S.R.D. R/W MON.
- ⊟ = CATV RISER
- Ø = TELEPHONE PEDESTAL
- Ø = WOOD POWER POLE

ABBREVIATIONS:

A/C = AIR CONDITIONER
ASPH = ASPHALT
C = CALCULATED FROM MEASURED
CATV = CABLE TELEVISION
C/B = CONCRETE BLOCK
CLF = CHAIN LINK FENCE
CM = CONCRETE MONUMENT
CONC = CONCRETE
ELEC = ELECTRIC
ELEV = ELEVATION
FND = FOUND
FNC = FENCE
LB = LICENSED SURVEYOR BUSINESS
(M) = FIELD MEASURED
MH = MANHOLE
O.U. = OVERHEAD UTILITIES
P = PLAT
PB = PLAT BOOK
P.U.E. = PUBLIC UTILITIES EASEMENT
TRANS = TRANSFORMER
TYP = TYPICAL
WM = WATER METER
WV = WATER VALVE

THIS IS NOT A BOUNDARY SURVEY

CERTIFICATE OF SURVEYOR:

NOT VALID WITHOUT THE SIGNATURE AND THE ORIGINAL RAISED SEAL OF A FLORIDA LICENSED SURVEYOR AND MAPPER. ADDITIONS OR DELETIONS TO THIS MAP BY ANYONE OTHER THAN THIS SURVEYOR IS PROHIBITED.

I HEREBY CERTIFY THAT THE SURVEY DATA SHOWN HEREON, IS A TRUE AND CORRECT REPRESENTATION OF A SURVEY PERFORMED UNDER MY SUPERVISION OF THE HEREON DESCRIBED PROPERTY, AND IT MEETS THE MINIMUM TECHNICAL STANDARDS AS SET FORTH BY THE FLORIDA BOARD OF LAND SURVEYORS, PURSUANT TO SECTION 472.027, FLORIDA STATUTES, AND CHAPTER 61G17-6, FLORIDA ADMINISTRATIVE CODE.

BY: _____
JAMES E. BRINKMAN, PSM - FLA. CERT# 5582
DATE: 6/23/09

FLOOD NOTE:

IN THE OPINION OF THIS SURVEYOR, ACCORDING TO THE NATIONAL FLOOD INSURANCE PROGRAM, FLOOD INSURANCE RATE MAP COMMUNITY PANEL NO. 120070-0175-B, DATED 1-6-88, THIS PROPERTY IS IN FLOOD ZONE "X" WHICH IS AN AREA DETERMINED TO BE OUTSIDE 500-YEAR FLOOD PLAIN, AS SCALED FROM SAID MAP. INFORMATION FROM THE FEDERAL EMERGENCY MANAGEMENT AGENCY (FEMA) FLOOD INSURANCE RATE MAPS, SHOWN ON THIS MAP, WAS CURRENT AS OF THE REFERENCED DATE. MAP REVISIONS AND AMENDMENTS ARE PERIODICALLY MADE BY LETTER AND MAY NOT BE REFLECTED ON THE MOST CURRENT MAP.

TITLE NOTE:

THIS SURVEY IS SUBJECT TO ANY FACTS THAT MAY BE DISCLOSED BY A FULL AND ACCURATE TITLE SEARCH. THIS SURVEYOR HAS NOT PERFORMED A SEARCH OF THE PUBLIC RECORDS ON THIS PARCEL FOR ANY CLAIMS OF TITLE, EASEMENTS, OR RESTRICTIONS THAT MAY EFFECT THIS PARCEL. THE PRESENCE OR ABSENCE OF ANY SUCH CLAIMS ARE NOT CERTIFIED HEREON.

BRINKMAN SURVEYING & MAPPING INC.
4607 NW 6th STREET SUITE C, GAINESVILLE, FL. 32609
PHONE: (352) 374-7707 FAX: (352) 374-8757

SCALE: 1" = 30'	"THE BENCHMARK IN QUALITY SERVICE"	DRAWN BY: J.D.M.
DATE: 5/28/2009		CHECKED BY: J.B.
FIELD WORK COMPLETED ON **** FIELDBOOK **, PAGE **		
PREPARED FOR: MARONDA		DRAWING NUMBER 081-09

REVISED 6/25/9

6/25/9

Columbia CHD

APPROVED

ATTN: GAIL 6/25/09

LOT 31 TIMBERLANDS

FROM: MELISSA BOOHE

This Instrument Prepared by and Return to :
Amy Wesp
SOUTHERN TITLE HOLDING COMPANY, LLC.
3943 BAY MEADOWS ROAD
JACKSONVILLE, Florida 32217
as a necessary incident to the fulfillment of conditions contained in a title insurance commitment issued by it.

Property Appraisers Parcel I.D. (Folio) Number(s):
R02856-000
Grantee(s) I.D.#(s):
File No:**JX0812085**

Inst:200812010775 Date:6/6/2008 Time:1:05 PM
Doc Stamp-Deed:6293.00
DC,P.DeWitt Cason,Columbia County Page 1 of 1 B:1151 P:2385

WARRANTY DEED
(CORPORATION)

This Warranty Deed Made this **27th day of May, 2008**, by **RML HOLDINGS INC., A FLORIDA CORPORATION**, and having its place of business at **703 NW BLACKBERRY CIRCLE, LAKE CITY, Florida 32055**, hereinafter called the grantor,

to **MARONDA HOMES, INC. OF FLORIDA , A FLORIDA CORPORATION**, whose post office address is: **11200 ST. JOHNS INDUSTRIAL PARKWAY, JACKSONVILLE, FLORIDA 32246**, hereinafter called the grantee,

WITNESSETH: That said grantor, for and in consideration of the sum of ~~$10.00~~ $899,000.00 Dollars and other valuable considerations, receipt whereof is hereby acknowledged, by these presents grants, bargains, sells, aliens, remises, releases, conveys and confirms unto the grantee, all that certain land situate in **Columbia** County, Florida, viz:
LOTS 1, 9, 10, 11, 12, 13, 14, 15, 16, 17, 18, 19, 20, 24, 27, 28, 29, 30, 31, 32, 33, 34, 35, 36, 37, 38, 39, 40, AND 41, OF TIMBERLANDS, PHASE 1, ACCORDING TO PLAT THEREOF AS RECORDED IN PLAT BOOK 9, PAGE 26 AND 27 OF THE PUBLIC RECORDS OF COLUMBIA COUNTY, FLORIDA.

TOGETHER with all the tenements, hereditaments and appurtenances thereto belonging or in anywise appertaining.
To Have and to Hold the same in fee simple forever.
And the grantor hereby covenants with said grantee that the grantor is lawfully seized of said land in fee simple; that the grantor has good right and lawful authority to sell and convey said land; that the grantor hereby fully warrants the title to said land and will defend the same against the lawful claims of all persons whomsoever; and that said land is free of all encumbrances, except taxes accruing subsequent to December 31, 2007, reservations, restrictions and easements of record, if any.
(Wherever used herein the terms "grantor" and "grantee" include all the parties to this instrument, and the heirs, legal representatives and assigns of individuals, and the successors and assigns of corporation.)
In Witness Whereof, the Grantor has caused these presents to be executed in its name, and its corporate seal to be hereunto affixed, by its proper officers thereunto duly authorized, the day and year first above written.

Signed, sealed and delivered in our presence:

ATTEST: _____
Secretary

RML HOLDINGS INC.

Witness Signature: Worth D. Morris
Printed Name: WORTH D. MORRIS

BY: _____
ROBERT R. LARDIZABAL, PRESIDENT

Witness Signature: Jodyn. Gable. AVP
Printed Name: Jodyn. Gable

STATE OF **FLORIDA**
COUNTY OF **DUVAL**

The foregoing instrument was acknowledged before me this 28th day of May, 2008, by **ROBERT R. LARDIZABAL** as **PRESIDENT** of **RML HOLDINGS INC., A FLORIDA CORPORATION**, on behalf of the corporation. He/she is personally known to me or who has produced driver license(s) as identification.

My Commission Expires:

WORTH D. MORRIS
Notary Public - State of Florida
My Commission Expires Jun 16, 2011
Commission # DD 664420

Worth D. Morris
Printed Name: WORTH D. MORRIS
Notary Public
Serial Number

Rough Openings For Doors

By Mike Merisko

Article Word Count: 435 [View Summary] Comments (0)

One of the most important parts of framing walls is getting the rough openings right. Items that determine what the height of One of the most important parts of framing walls is getting the rough openings right. Items that determine what the height of your opening will be are floor finishes and the use of underlayment. Door widths will stay constant with the size of a standard door.

In new construction most doors are hung after the floors are installed. This allows flooring contractors (tile, hardwood, vinyl, laminate) to lay their flooring products without making tricky cuts around door jambs. It also makes for a neat and clean door installation. Exceptions to this are carpeted floors. Doors are hung before the carpeting is laid. When doors are hung in carpeted areas, its a good idea to shim them up 1/2", putting a shim under each jamb leg. This eliminates the need to cut the doors down after the carpet is installed.

For a 6' 8" high door (80 inches) I like to frame my rough opening height at 82 3/4". This allows room for all the situations mentioned above. If your header material is a double 2x12, holding it to the top plate will give you that height.

Rough openings for door widths are pretty much standard. The rough opening width is 2 inches wider than the door itself. this allows room for the door jambs which are usually 3/4" thick. This gives you approximately 1/2" of play and shim room when installing a prehung door. For a 36" door (3' 0") the rough opening width would be 38". Here are the most common door sizes and their rough openings.

Door Size Rough Opening Size

2' 0" x 6'8" -26" x 82 3/4"

2' 2" x 6'8" -28" x 82 3/4"

2' 4" x 6'8" -30" x 82 3/4"

2' 6" x 6'8" -32" x 82 3/4"

2' 8" x 6'8" -34" x 82 3/4"

Doors
RSS Feed:

2' 10"x 6'8" -36" x 82 3/4"

3' 0" x 6'8" -38" x 82 3/4"

To figure the rough opening for double doors or french doors, take the door size times 2 and add 2". The most common sizes for exterior doors are the 2'8" and the 3'0" doors. The 2'8" is usually used for the back door and the access door from the garage. That size door for exterior use is being used less these days because of the size of appliances and furniture. Exterior doors with sidelights and sliding patio doors rough openings vary from manufacturer to manufacturer. These should be verified and gotten from the supplier.

Getting the rough openings right the first time keeps the sawzall in its carrying case and having to change the opening after the walls are drywalled and painted.

www.sawkerfs.com

About the Author: Mike Merisko has been a carpenter for 26 years. Most of those years were spent in the homebuilding and remodeling industries. He was also in business as a carpentry and general contractor. While that is his forte, he also has experience in bridge building, commercial construction, and exhibit building which is how he earns his living these days. You can browse through articles by him and others at his website http://www.sawkerfs.com or visit his blog at http://www.sawkerfs.blogspot.com

Article Source: http://EzineArticles.com/?expert=Mike_Merisko

Other Recent EzineArticles from the Home-Improvement:Doors Category:

- Choosing a Good Storm Door
- Doorbells - The Automated Crier
- A Guide to Bar Handles
- Doorbells - Knock No More
- 3 Important Benefits of Installing an Automatic Pet Door
- Replacing the Garage Door
- Replace Your Kitchen Doors on a Budget
- Deciding on Glass Kitchen Doors
- How to Fix an Aluminum Sliding Door
- UPVC Windows, Doors and Conservatories - Improve the Safety of Your Home
- How to Fix an External Security Steel Door
- Budgeting Your Home - Building Improvement
- Front Doors Are a Quick and Easy Way to Improve the Look of Your Home
- Front Doors Come in a Diversity of Colourings and Sizes
- Take Note of the Different Types of Doors You Pass Through Today

Most Viewed EzineArticles in the Home-Improvement:Doors Category (90 Days)

1. Choosing the Right Storm Door From an Expert Storm Door Installer's Perspective

2. Interior Sliding Glass Doors For Modern Design and Functionality
3. How to Measure For a Storm Door
4. Aluminum Frames Vs PVC Or Wood - Are They Worth the Extra Cost?
5. A French Patio Door Looks Great
6. Space Saving Bi Fold Doors
7. Which is a Better Storm Door - Larson Signature Or Pella Select?
8. Choosing Door Window Panel Coverings
9. How to Install Patio Doors
10. BiFold Doors - Give More Creative Living Space
11. Choosing a French Door For Your Home
12. Screen Pet Doors
13. Storm Door Installation Mistakes to Avoid
14. Upgrade Your Sliding Patio Doors For a Great New Appearance - New Doors Can Revitalize Your Home!
15. How to Insulate Your Garage Door Yourself

Most Published EzineArticles in the Home-Improvement:Doors Category

1. Replace Your Kitchen Doors on a Budget
2. Deciding on Glass Kitchen Doors
3. Garage Door Safety - Fifteen Simple Steps to Protect Your Family
4. Freshen Up Your Space With Satin Nickel Door Knobs
5. Steel Door - A High Quality and Elegant Door Material
6. Choosing the Right Door
7. Interior Sliding Glass Doors For Modern Design and Functionality
8. Home Improvement - Use Door Handles to Pull it Together
9. The Difference Between Single and Multi-Point Electronic Door Closers
10. Door Knobs and Door Handles
11. Sliding Door - Best Door For Less Space
12. Insulated Pet Doors
13. Replacing the Garage Door
14. Door Hinges - Quality Equals Longevity
15. Improve the Entrance of Your Home

Article Submitted On: August 13, 2006

- MLA Style Citation:
  Merisko, Mike "Rough Openings For Doors." Rough Openings For Doors. 13 Aug. 2006. *EzineArticles.com*. 1 Jul 2009 <http://ezinearticles.com/?Rough-Openings-For-Doors&id=267777>.

- APA Style Citation:
  Merisko, M. (2006, August 13). *Rough Openings For Doors*. Retrieved July 1, 2009, from http://ezinearticles.com/?Rough-Openings-For-Doors&id=267777

- Chicago Style Citation:
  Merisko, Mike "Rough Openings For Doors." *Rough Openings For Doors EzineArticles.com*. http://ezinearticles.com/?Rough-Openings-For-Doors&id=267777

For composite decking board 20' long the price is $1.50 per foot or $30.00 per board.

Floating dock 20' X 8' (96") board width is 5 &1/2" = 96/51/2"=17.45 or 18 boards @ $30.00 per board times 18 boards= $ 540.00 + 7% sale tax= 37.80 = 577.80

For PT wood boards 16' long the price is $8.97 per board. 20 boards will be needed.

20X $8.97=$179.40 + sale tax $12.56 =$191.96

Catwalk to river is 75' Long 5' wide using 12' PT Boards

75'= 900" / 5"= 180 total boards / 2 = 90 (12' boards) @ $5.57= $501.30 + 7% sale tax= $36.00 = $537.30

Using PT lumber

Dock & Catwalk $ 729.26

FORM 1100A-08

FLORIDA ENERGY EFFICIENCY CODE FOR BUILDING CONSTRUCTION

Florida Department of Community Affairs Residential Performance Method A

Project Name:	BAYBURY M- GAINESVILLE	Builder Name:	MARONDA HOMES
Street:		Permit Office:	Columbia
City, State, Zip:	, FL ,	Permit Number:	27942
Owner:		Jurisdiction:	221000
Design Location:	FL, Gainesville		

1. New construction or existing	New (From Plans)
2. Single family or multiple family	Single-family
3. Number of units, if multiple family	2
4. Number of Bedrooms	4
5. Is this a worst case?	Yes
6. Conditioned floor area (ft²)	2827

7. Windows	Description	Area
a. U-Factor:	Dbl, U=0.60	246.00 ft²
SHGC:	SHGC=0.32	
b. U-Factor:	N/A	ft²
SHGC:		
c. U-Factor:	N/A	ft²
SHGC:		
d. U-Factor:	N/A	ft²
SHGC:		
e. U-Factor:	N/A	ft²
SHGC:		

8. Floor Types	Insulation	Area
a. Slab-On-Grade Edge Insulation	R=0.0	1232.00 ft²
b. Floor over Garage	R=19.0	410.00 ft²
c. other	R=	80.00 ft²

9. Wall Types	Insulation	Area
a. Frame - Wood, Exterior	R=13.0	1328.00 ft²
b. Concrete Block - Int Insul, Exterior	R=4.1	976.00 ft²
c. Frame - Wood, Adjacent	R=13.0	192.00 ft²
d. N/A	R=	ft²

10. Ceiling Types	Insulation	Area
a. Under Attic (Vented)	R=30.0	1722.00 ft²
b. N/A	R=	ft²
c. N/A	R=	ft²

11. Ducts
a. Sup: Attic Ret: Interior AH: Interior Sup. R= 6, 400 ft²

12. Cooling systems (combined)
a. Central Unit — Cap: 65 kBtu/hr, SEER: 14

13. Heating systems (combined)
a. Electric Heat Pump — Cap: 64 kBtu/hr, HSPF: 8.2

14. Hot water systems
a. Electric — Cap: 50 gallons, EF: 0.93
b. Conservation features
None

15. Credits — CV, Pstat

Glass/Floor Area: 0.087

Total As-Built Modified Loads: 46.39
Total Baseline Loads: 65.32

PASS

I hereby certify that the plans and specifications covered by this calculation are in compliance with the Florida Energy Code.

PREPARED BY: KENNETH WAYNE CAMPBELL
DATE: 6/16/09

I hereby certify that this building, as designed, is in compliance with the Florida Energy Code.

OWNER/AGENT: KENNETH WAYNE CAMPBELL
DATE: 6/16/-9

Review of the plans and specifications covered by this calculation indicates compliance with the Florida Energy Code. Before construction is completed this building will be inspected for compliance with Section 553.908 Florida Statutes.

GREAT SEAL OF THE STATE OF FLORIDA — IN GOD WE TRUST

BUILDING OFFICIAL: _____
DATE: _____

- **Compliance requires certification by the air handler unit manufacturer that the air handler enclosure qualifies as certified factory-sealed in accordance with N1110.A.3.**

PROJECT

Title:	BAYBURY M- GAINESVILLE	Bedrooms:	4	Adress Type:	Street Address
Building Type:	FLAsBuilt	Bathrooms:	2.5	Lot #	
Owner:		Conditioned Area:	2827	SubDivision:	
# of Units:	2	Total Stories:	2	PlatBook:	
Builder Name:	MARONDA HOMES	Worst Case:	Yes	Street:	
Permit Office:		Rotate Angle:	315	County:	ALACHUA
Jurisdiction:		Cross Ventilation:	Yes	City, State, Zip:	,
Family Type:	Single-family	Whole House Fan:	No		FL ,
New/Existing:	New (From Plans)				
Comment:					

CLIMATE

√	Design Location	TMY Site	IECC Zone	Design Temp 97.5 %	Design Temp 2.5 %	Int Design Temp Winter	Int Design Temp Summer	Heating Degree Days	Design Moisture	Daily Temp Range
_____	FL, Gainesville	FL_GAINESVILLE_REGI	2	32	92	75	70	1305.5	51	Medium

FLOORS

√	#	Floor Type	Perimeter	Perimeter R-Value	Area	Joist R-Value	Tile	Wood	Carpet
_____	1	Slab-On-Grade Edge Insulatio	149 ft	0	1232 ft²		0	0.25	0.75
_____	2	Floor over Garage			410 ft²	19	0	0	1
_____	3	Raised Floor			80 ft²	19	0	0	1

ROOF

√	#	Type	Materials	Roof Area	Gable Area	Roof Color	Solar Absor.	Tested	Deck Insul.	Pitch
_____	1	Hip	Composition shingles	1926 ft²	0 ft²	Medium	0.96	No	0	26.6 deg

ATTIC

√	#	Type	Ventilation	Vent Ratio (1 in)	Area	RBS	IRCC
_____	1	Full attic	Vented	150	1722 ft²	N	N

CEILING

√	#	Ceiling Type	R-Value	Area	Framing Frac	Truss Type
_____	1	Under Attic (Vented)	30	1722 ft²	0.11	Wood

WALLS

√	#	Ornt	Adjacent To	Wall Type	Cavity R-Value	Area	Sheathing R-Value	Framing Fraction	Solar Absor.
_____	1	N	Exterior	Concrete Block - Int Insul	4.1	160 ft²	0	0	0.75
_____	2	E	Exterior	Concrete Block - Int Insul	4.1	272 ft²	0	0	0.75
_____	3	S	Exterior	Concrete Block - Int Insul	4.1	320 ft²	0	0	0.75
_____	4	W	Exterior	Concrete Block - Int Insul	4.1	224 ft²	0	0	0.75
_____	5	N	Exterior	Frame - Wood	13	320 ft²	0	0.23	0.75
_____	6	E	Exterior	Frame - Wood	13	288 ft²	0	0.23	0.75

WALLS

√	#	Ornt	Adjacent To	Wall Type	Cavity R-Value	Area	Sheathing R-Value	Framing Fraction	Solar Absor.
____	7	S	Exterior	Frame - Wood	13	320 ft²	0	0.23	0.75
____	8	W	Exterior	Frame - Wood	13	400 ft²	0	0.23	0.75
____	9	N	Garage	Frame - Wood	13	192 ft²		0.23	0.01

DOORS

√	#	Ornt	Door Type	Storms	U-Value	Area
____	1	N	Insulated	None	0.4	20 ft²
____	2	N	Insulated	None	0.4	18 ft²

WINDOWS

Window orientation below is as entered. Actual orientation is modified by rotate angle shown in "Project" section above.

√	#	Ornt	Frame	Panes	NFRC	U-Factor	SHGC	Storms	Area	Overhang Depth	Overhang Separation	Int Shade	Screening
____	1	N	Metal	Low-E Double	Yes	0.6	0.32	N	12.5 ft²	1 ft 0 in	1 ft 0 in	HERS 2006	None
____	2	N	Metal	Low-E Double	Yes	0.6	0.32	N	12.5 ft²	1 ft 0 in	1 ft 0 in	HERS 2006	None
____	3	N	Metal	Low-E Double	Yes	0.6	0.32	N	12.5 ft²	1 ft 0 in	1 ft 0 in	HERS 2006	None
____	4	N	Metal	Low-E Double	Yes	0.6	0.32	N	24 ft²	3 ft 0 in	3 ft 0 in	HERS 2006	None
____	5	N	Metal	Low-E Double	Yes	0.6	0.32	N	10 ft²	1 ft 0 in	12 ft 0 in	HERS 2006	None
____	6	N	Metal	Low-E Double	Yes	0.6	0.32	N	12.5 ft²	1 ft 0 in	12 ft 0 in	HERS 2006	None
____	7	W	Metal	Low-E Double	Yes	0.6	0.32	N	20 ft²	1 ft 0 in	10 ft 0 in	HERS 2006	None
____	8	S	Metal	Low-E Double	Yes	0.6	0.32	N	16 ft²	1 ft 0 in	1 ft 0 in	HERS 2006	None
____	9	S	Metal	Low-E Double	Yes	0.6	0.32	N	16 ft²	1 ft 0 in	1 ft 0 in	HERS 2006	None
____	10	S	Metal	Low-E Double	Yes	0.6	0.32	N	24 ft²	1 ft 0 in	10 ft 0 in	HERS 2006	None
____	11	S	Metal	Low-E Double	Yes	0.6	0.32	N	40 ft²	1 ft 0 in	10 ft 0 in	HERS 2006	None
____	12	S	Metal	Low-E Double	Yes	0.6	0.32	N	10 ft²	1 ft 0 in	1 ft 0 in	HERS 2006	None
____	13	S	Metal	Low-E Double	Yes	0.6	0.32	N	20 ft²	1 ft 0 in	1 ft 0 in	HERS 2006	None
____	14	W	Metal	Low-E Double	Yes	0.6	0.32	N	16 ft²	1 ft 0 in	1 ft 0 in	HERS 2006	None

INFILTRATION & VENTING

√	Method	SLA	CFM 50	ACH 50	ELA	EqLA	---- Forced Ventilation ---- Supply CFM	Exhaust CFM	Run Time Fraction	Fan Watts
____	Default	0.00036	2669	7.08	146.6	275.6	0 cfm	0 cfm	0	0

GARAGE

√	#	Floor Area	Ceiling Area	Exposed Wall Perimeter	Avg. Wall Height	Exposed Wall Insulation
____	1	410 ft²	0 ft²	23 ft	8 ft	13

COOLING SYSTEM

√	#	System Type	Subtype	Efficiency	Capacity	Air Flow	SHR	Ductless
_____	1	Central Unit	None	SEER: 14	35 kBtu/hr	1050 cfm	0.78	False
_____	2	Central Unit	None	SEER: 14	30 kBtu/hr	900 cfm	0.74	False

HEATING SYSTEM

√	#	System Type	Subtype	Efficiency	Capacity	Ductless
_____	1	Electric Heat Pump	None	HSPF: 8.2	34 kBtu/hr	False
_____	2	Electric Heat Pump	None	HSPF: 8.2	30 kBtu/hr	False

HOT WATER SYSTEM

√	#	System Type	EF	Cap	Use	SetPnt	Conservation
_____	1	Electric	0.93	50 gal	70 gal	120 deg	None

SOLAR HOT WATER SYSTEM

√	FSEC Cert #	Company Name	System Model #	Collector Model #	Collector Area	Storage Volume	FEF
_____	None	None			ft²		

DUCTS

√	#	---- Supply ---- Location	R-Value	Area	---- Return ---- Location	Area	Leakage Type	Air Handler	CFM 25	Percent Leakage	QN	RLF
_____	1	Attic	6	400 ft²	Interior	20 ft²	Default Leakage	Interior				

TEMPERATURES

Programable Thermostat: Y

Ceiling Fans:

	Jan	Feb	Mar	Apr	May	Jun	Jul	Aug	Sep	Oct	Nov	Dec
Cooling	[X]	[X]	[X]	[X]	[X]	[X]	[X]	[X]	[X]	[X]	[X]	[X]
Heating	[X]	[X]	[X]	[X]	[X]	[X]	[X]	[X]	[X]	[X]	[X]	[X]
Venting	[X]	[X]	[X]	[X]	[X]	[X]	[X]	[X]	[X]	[X]	[X]	[X]

Thermostat Schedule: HERS 2006 Reference

Schedule Type		Hours 1	2	3	4	5	6	7	8	9	10	11	12
Cooling (WD)	AM	78	78	78	78	78	78	78	78	80	80	80	80
	PM	80	80	78	78	78	78	78	78	78	78	78	78
Cooling (WEH)	AM	78	78	78	78	78	78	78	78	78	78	78	78
	PM	78	78	78	78	78	78	78	78	78	78	78	78
Heating (WD)	AM	66	66	66	66	66	68	68	68	68	68	68	68
	PM	68	68	68	68	68	68	68	68	68	68	66	66
Heating (WEH)	AM	66	66	66	66	66	68	68	68	68	68	68	68
	PM	68	68	68	68	68	68	68	68	68	68	66	66

Code Compliance Cheklist

Residential Whole Building Performance Method A - Details

ADDRESS: , FL,	PERMIT #:

INFILTRATION REDUCTION COMPLIANCE CHECKLIST

COMPONENTS	SECTION	REQUIREMENTS FOR EACH PRACTICE	CHECK
Exterior Windows & Doors	N1106.AB.1.1	Maximum: .3 cfm/sq.ft. window area; .5 cfm/sq.ft. door area.	
Exterior & Adjacent Walls	N1106.AB.1.2.1	Caulk, gasket, weatherstrip or seal between: windows/doors & frames, surrounding wall; foundation & wall sole or sill plate; joints between exterior wall panels at corners; utility penetrations; between wall panels & top/bottom plates; between walls and floor. EXCEPTION: Frame walls where a continuous infiltration barrier is installed that extends from, and is sealed to, the foundation to the top plate.	
Floors	N1106.AB.1.2.2	Penetrations/openings > 1/8" sealed unless backed by truss or joint members. EXCEPTION: Frame floors where a continuous infiltration barrier is installed that is sealed to the perimeter, penetrations and seams.	
Ceilings	N1106.AB.1.2.3	Between walls & ceilings; penetrations of ceiling plane to top floor; around shafts, chases, soffits, chimneys, cabinets sealed to continuous air barrier; gaps in gyp board & top plate; attic access. EXCEPTION: Frame ceilings where a continuous infiltration barrier is installed that is sealed at the perimeter, at penetrations and seams.	
Recessed Lighting Fixtures	N1106.AB.1.2.4	Type IC rated with no penetrations, sealed; or Type IC or non-IC rated, installed inside a sealed box with 1/2" clearance & 3" from insulation; or Type IC with < 2.0 cfm from conditioned space, tested.	
Multi-story Houses	N1106.AB.1.2.5	Air barrier on perimeter of floor cavity between floors.	
Additional Infiltration reqts	N1106.AB.1.3	Exhaust fans vented to outdoors, dampers; combustion space heaters comply with NFPA, have combustion air.	

OTHER PRESCRIPTIVE MEASURES (must be met or exceeded by all residences.)

COMPONENTS	SECTION	REQUIREMENTS	CHECK
Water Heaters	N1112.AB.3	Comply with efficiency requirements in Table N112.ABC.3. Switch or clearly marked circuit breaker (electric) or cutoff (gas) must be provided. External or built-in heat trap required.	
Swimming Pools & Spas	N1112.AB.2.3	Spas & heated pools must have covers (except solar heated). Non-commercial pools must have a pump timer. Gas spa & pool heaters must have a minimum thermal efficiency of 78%. Heat pump pool heaters shall have a minimum COP of 4.0.	
Shower heads	N1112.AB.2.4	Water flow must be restricted to no more than 2.5 gallons per minute at 80 PSIG.	
Air Distribution Systems	N1110.AB	All ducts, fittings, mechanical equipment and plenum chambers shall be mechanically attached, sealed, insulated and installed in accordance with the criteria of Section N1110.AB. Ducts in unconditioned attics: R-6 min. insulation.	
HVAC Controls	N1107.AB.2	Separate readily accessible manual or automatic thermostat for each system.	
Insulation	N1104.AB.1 N1102.B.1.1	Ceilings-Min. R-19. Common walls-frame R-11 or CBS R-3 both sides. Common ceiling & floors R-11.	

ENERGY PERFORMANCE LEVEL (EPL) DISPLAY CARD

ESTIMATED ENERGY PERFORMANCE INDEX* = 71

The lower the EnergyPerformance Index, the more efficient the home.

1. New construction or existing	New (From Plans)
2. Single family or multiple family	Single-family
3. Number of units, if multiple family	2
4. Number of Bedrooms	4
5. Is this a worst case?	Yes
6. Conditioned floor area (ft²)	2827

7. Windows**	Description	Area
a. U-Factor:	Dbl, U=0.60	246.00 ft²
SHGC:	SHGC=0.32	
b. U-Factor:	N/A	ft²
SHGC:		
c. U-Factor:	N/A	ft²
SHGC:		
d. U-Factor:	N/A	ft²
SHGC:		
e. U-Factor:	N/A	ft²
SHGC:		

8. Floor Types	Insulation	Area
a. Slab-On-Grade Edge Insulation	R=0.0	1232.00 ft²
b. Floor over Garage	R=19.0	410.00 ft²
c. other	R=	80.00 ft²

9. Wall Types	Insulation	Area
a. Frame - Wood, Exterior	R=13.0	1328.00 ft²
b. Concrete Block - Int Insul, Exterior	R=4.1	976.00 ft²
c. Frame - Wood, Adjacent	R=13.0	192.00 ft²
d. N/A	R=	ft²

10. Ceiling Types	Insulation	Area
a. Under Attic (Vented)	R=30.0	1722.00 ft²
b. N/A	R=	ft²
c. N/A	R=	ft²

11. Ducts
a. Sup: Attic Ret: Interior AH: Interior Sup. R= 6, 400 ft²

12. Cooling systems (combined)
a. Central Unit — Cap: 65 kBtu/hr, SEER: 14

13. Heating systems (combined)
a. Electric Heat Pump — Cap: 64 kBtu/hr, HSPF: 8.2

14. Hot water systems
a. Electric — Cap: 50 gallons, EF: 0.93

b. Conservation features
None

15. Credits — CV, Pstat

I certify that this home has complied with the Florida Energy Efficiency Code for Building Construction through the above energy saving features which will be installed (or exceeded) in this home before final inspection. Otherwise, a new EPL Display Card will be completed based on installed Code compliant features.

Builder Signature: THEODORE BROCKELL Date: 6.25.09

Address of New Home: 330 SW MULBERRY DR City/FL Zip: LAKE CITY FL 32024

GREAT SEAL OF THE STATE OF FLORIDA — IN GOD WE TRUST

*Note: The home's estimated Energy Performance Index is only available through the EnergyGauge USA - FlaRes2008 computer program. This is not a Building Energy Rating. If your Index is below 100, your home may qualify for incentives if you obtain a Florida Energy Gauge Rating. Contact the Energy Gauge Hotline at (321) 638-1492 or see the Energy Gauge web site at energygauge.com for information and a list of certified Raters. For information about Florida's Energy Efficiency Code for Building Construction, contact the Department of Community Affairs at (850) 487-1824.

**Label required by Section 13-104.4.5 of the Florida Building Code, Building, or Section B2.1.1 of Appendix G of the Florida Building Code, Residential, if not DEFAULT.

wrightsoft®

Project Summary
Entire House
MARONDA HOMES

Job: BAYBURY 1ST FLOOR
Date:
By: G. CARMACK

Project Information

For: BAYBURY 1ST FLOOR

Notes: FACES SOUTH

Design Information

Weather: Jacksonville, Int'l AP, FL, US

Winter Design Conditions

Outside db	32	°F
Inside db	70	°F
Design TD	38	°F

Summer Design Conditions

Outside db	93	°F
Inside db	75	°F
Design TD	18	°F
Daily range	M	
Relative humidity	50	%
Moisture difference	51	gr/lb

Heating Summary

Structure	21923	Btuh
Ducts	4337	Btuh
Central vent (50 cfm)	***2088***	Btuh
Humidification	0	Btuh
Piping	0	Btuh
Equipment load	28347	Btuh

Sensible Cooling Equipment Load Sizing

Structure	18206	Btuh
Ducts	5331	Btuh
Central vent (50 cfm)	***967***	Btuh
Blower	0	Btuh
Use manufacturer's data	n	
Rate/swing multiplier	0.98	
Equipment sensible load	23915	Btuh

Infiltration

Method		Simplified
Construction quality		Average
Fireplaces		0
	Heating	**Cooling**
Area (ft²)	1232	1232
Volume (ft³)	9856	9856
Air changes/hour	0.45	0.23
Equiv. AVF (cfm)	74	38

Latent Cooling Equipment Load Sizing

Structure	2317	Btuh
Ducts	1166	Btuh
Central vent (50 cfm)	1743	Btuh
Equipment latent load	5225	Btuh
Equipment total load	29141	Btuh
Req. total capacity at 0.74 SHR	2.7	ton

Heating Equipment Summary

Make	TEMPSTAR
Trade	HEATPUMP
Model	N4H330AKA

Efficiency	8.7 HSPF	
Heating input		
Heating output	0	Btuh @ 47°F
Temperature rise	0	°F
Actual air flow	935	cfm
Air flow factor	0.036	cfm/Btuh
Static pressure	0.60	in H2O
Space thermostat		

Cooling Equipment Summary

Make	TEMPSTAR
Trade	HEATPUMP
Cond	N4H330AKA
Coil	FEM4X3600

Efficiency	14 SEER	
Sensible cooling	22644	Btuh
Latent cooling	7956	Btuh
Total cooling	30600	Btuh
Actual air flow	***935***	cfm
Air flow factor	0.040	cfm/Btuh
Static pressure	0.60	in H2O
Load sensible heat ratio	0.82	

Bold/italic values have been manually overridden

Printout certified by ACCA to meet all requirements of Manual J 8th Ed.

wrightsoft®

Building Analysis
Entire House
MARONDA HOMES

Job: BAYBURY 1ST FLOOR
Date:
By: G. CARMACK

Project Information

For: BAYBURY 1ST FLOOR

Design Conditions

Location:
Jacksonville, Int'l AP, FL, US
Elevation: 30 ft
Latitude: 31°N

Outdoor:	**Heating**	**Cooling**
Dry bulb (°F)	32	93
Daily range (°F)	-	18 (M)
Wet bulb (°F)	-	77
Wind speed (mph)	15.0	7.5

Indoor:	**Heating**	**Cooling**
Indoor temperature (°F)	70	75
Design TD (°F)	38	18
Relative humidity (%)	30	50
Moisture difference (gr/lb)	11.5	51.3

Infiltration:

Method	Simplified
Construction quality	Average
Fireplaces	0

Heating

Component	Btuh/ft²	Btuh	% of load
Walls	4.5	4642	16.4
Glazing	48.3	6274	22.1
Doors	0.0	0	0.0
Ceilings	1.9	490	1.7
Floors	15.1	7431	26.2
Infiltration	2.7	3087	10.9
Ducts		4337	15.3
Piping		0	0.0
Humidification		0	0.0
Ventilation		2088	7.4
Adjustments		0	
Total		**28347**	**100.0**

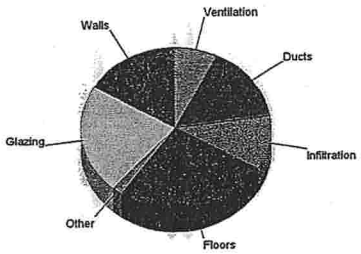

Cooling

Component	Btuh/ft²	Btuh	% of load
Walls	2.4	2492	10.2
Glazing	82.6	10741	43.8
Doors	0.0	0	0.0
Ceilings	2.6	692	2.8
Floors	0.0	0	0.0
Infiltration	0.6	731	3.0
Ducts		5331	21.8
Ventilation		967	3.9
Internal gains		3550	14.5
Blower		0	0.0
Adjustments		0	
Total		**24504**	**100.0**

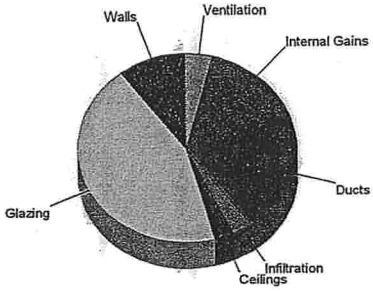

Overall U-value = 0.260 Btuh/ft²-°F

Data entries checked.

wrightsoft®

Project Summary
Entire House
MARONDA HOMES

Job: BAYBURY 2ND FLOOR
Date:
By: G. CARMACK

Project Information

For: BAYBURY 2ND FLOOR

Notes: FACES SOUTH

Design Information

Weather: Jacksonville, Int'l AP, FL, US

Winter Design Conditions

Outside db	32	°F
Inside db	70	°F
Design TD	38	°F

Summer Design Conditions

Outside db	93	°F
Inside db	75	°F
Design TD	18	°F
Daily range	M	
Relative humidity	50	%
Moisture difference	51	gr/lb

Heating Summary

Structure	19743	Btuh
Ducts	4815	Btuh
Central vent (0 cfm)	***0***	Btuh
Humidification	0	Btuh
Piping	0	Btuh
Equipment load	24557	Btuh

Sensible Cooling Equipment Load Sizing

Structure	21280	Btuh
Ducts	5905	Btuh
Central vent (0 cfm)	***0***	Btuh
Blower	0	Btuh
Use manufacturer's data	n	
Rate/swing multiplier	0.98	
Equipment sensible load	26533	Btuh

Infiltration

Method		Simplified
Construction quality		Average
Fireplaces		0
	Heating	**Cooling**
Area (ft²)	1595	1595
Volume (ft³)	12760	12760
Air changes/hour	0.38	0.20
Equiv. AVF (cfm)	81	43

Latent Cooling Equipment Load Sizing

Structure	3282	Btuh
Ducts	1297	Btuh
Central vent (0 cfm)	0	Btuh
Equipment latent load	4580	Btuh
Equipment total load	31113	Btuh
Req. total capacity at 0.78 SHR	2.8	ton

Heating Equipment Summary

Make	TEMPSTAR
Trade	HEATPUMP
Model	N4H336AKA

Efficiency	8.5 HSPF	
Heating input		
Heating output	0	Btuh @ 47°F
Temperature rise	0	°F
Actual air flow	935	cfm
Air flow factor	0.038	cfm/Btuh
Static pressure	0.60	in H2O
Space thermostat		

Cooling Equipment Summary

Make	TEMPSTAR
Trade	HEATPUMP
Cond	N4H336AKA
Coil	FEM4X3600

Efficiency	14 SEER	
Sensible cooling	26988	Btuh
Latent cooling	7612	Btuh
Total cooling	34600	Btuh
Actual air flow	***935***	cfm
Air flow factor	0.034	cfm/Btuh
Static pressure	0.60	in H2O
Load sensible heat ratio	0.86	

Bold/italic values have been manually overridden

Printout certified by ACCA to meet all requirements of Manual J 8th Ed.

wrightsoft®

Building Analysis
Entire House
MARONDA HOMES

Job: BAYBURY 2ND FLOOR
Date:
By: G. CARMACK

Project Information

For: BAYBURY 2ND FLOOR

Design Conditions

Location:
Jacksonville, Int'l AP, FL, US
Elevation: 30 ft
Latitude: 31°N

Outdoor:	**Heating**	**Cooling**
Dry bulb (°F)	32	93
Daily range (°F)	-	18 (M)
Wet bulb (°F)	-	77
Wind speed (mph)	15.0	7.5

Indoor:	**Heating**	**Cooling**
Indoor temperature (°F)	70	75
Design TD (°F)	38	18
Relative humidity (%)	30	50
Moisture difference (gr/lb)	11.5	51.3

Infiltration:

Method	Simplified
Construction quality	Average
Fireplaces	0

Heating

Component	Btuh/ft²	Btuh	% of load
Walls	3.7	4866	19.8
Glazing	48.3	6563	26.7
Doors	0.0	0	0.0
Ceilings	1.9	3082	12.5
Floors	2.9	1858	7.6
Infiltration	2.3	3374	13.7
Ducts		4815	19.6
Piping		0	0.0
Humidification		0	0.0
Ventilation		0	0.0
Adjustments		0	
Total		**24557**	**100.0**

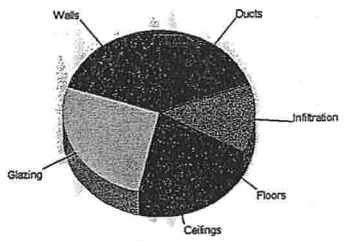

Cooling

Component	Btuh/ft²	Btuh	% of load
Walls	2.7	3560	13.1
Glazing	77.0	10473	38.5
Doors	0.0	0	0.0
Ceilings	2.6	4355	16.0
Floors	0.0	0	0.0
Infiltration	0.6	823	3.0
Ducts		5905	21.7
Ventilation		0	0.0
Internal gains		2070	7.6
Blower		0	0.0
Adjustments		0	
Total		**27185**	**100.0**

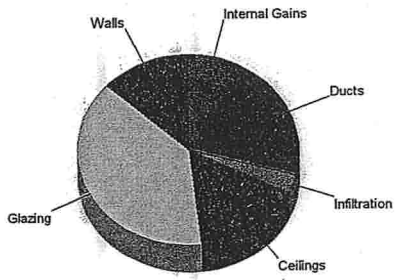

Overall U-value = 0.115 Btuh/ft²-°F

Data entries checked.

27942

Columbia County Building Department
Culvert Permit

Culvert Permit No.
000001739

DATE 07/13/2009 PARCEL ID # 10-4S-16-02856-131

APPLICANT TED BROCK PHONE 904 296-1490

ADDRESS 6800 SOUTH POINT PARKWAY #300 JACKSONVILLE FL 32216

OWNER MARONDA HOMES PHONE 904 296-1490

ADDRESS 330 SW MULBERRY DR LAKE CITY FL 32024

CONTRACTOR TED BROCK PHONE 904 296-1490

LOCATION OF PROPERTY 90W, TL ON 247S, TR ON 252B, TL ON TIMBER RIDGE DR.,
TL MULBERRY, 8TH LOT ON RIGHT

SUBDIVISION/LOT/BLOCK/PHASE/UNIT TIMBERLANDS 31

SIGNATURE

INSTALLATION REQUIREMENTS

[x] Culvert size will be 18 inches in diameter with a total lenght of 32 feet, leaving 24 feet of driving surface. Both ends will be mitered 4 foot with a 4 : 1 slope and poured with a 4 inch thick reinforced concrete slab.

INSTALLATION NOTE: Turnouts will be required as follows:
a) a majority of the current and existing driveway turnouts are paved, or;
b) the driveway to be served will be paved or formed with concrete.
Turnouts shall be concrete or paved a minimum of 12 feet wide or the width of the concrete or paved driveway, whichever is greater. The width shall conform to the current and existing paved or concreted turnouts.

[ ] Culvert installation shall conform to the approved site plan standards.

[ ] Department of Transportation Permit installation approved standards.

[ ] Other

ALL PROPER SAFETY REQUIREMENTS SHOULD BE FOLLOWED DURING THE INSTALATION OF THE CULVERT.

135 NE Hernando Ave., Suite B-21
Lake City, FL 32055
Phone: 386-758-1008 Fax: 386-758-2160

Amount Paid 25.00

COLUMBIA COUNTY · GATEWAY TO FLORIDA

2774C

Inst:200912011561 Date:7/13/2009 Time:11:32 AM
DC,P.DeWitt Cason,Columbia County Page 1 of 1 B:1176 P:2540

NOTICE OF COMMENCEMENT

County Clerk's Office Stamp or Seal

Tax Parcel Identification Number 10-45-16-02856-131

THE UNDERSIGNED hereby gives notice that improvements will be made to certain real property, and in accordance with Section 713.13 of the Florida Statutes, the following information is provided in this **NOTICE OF COMMENCEMENT.**

1. Description of property *(legal description)*: TIMBERLANDS
   a) Street *(job)* Address: 330 SW MULBERRY DR. LAKE CITY FL 32024
2. General description of improvements: CONSTRUCTION OF SINGLE FAMILY RESIDENCE
3. Owner Information
   a) Name and address: MARONDA HOMES INC. OF FLORIDA 6800 SOUTHPOINT PKY #300 JAX FL 32216
   b) Name and address of fee simple titleholder (if other than owner)
   c) Interest in property
4. Contractor Information
   a) Name and address: MARONDA HOMES INC. OF FLORIDA 6800 SOUTHPOINT PKY #300
   b) Telephone No.: 904 296 1490 Fax No. (Opt.) 904 322-6375 JAX FL 32216
5. Surety Information
   a) Name and address:
   b) Amount of Bond:
   c) Telephone No.: Fax No. (Opt.)
6. Lender
   a) Name and address: BANK OF AMERICA NA A NATIONAL BANKING ASSOC. (407) 646-6303
   b) Phone No. 250 SOUTH PARK AVE #400 WINTER PARK FL 32789-4316
7. Identity of person within the State of Florida designated by owner upon whom notices or other documents may be served:
   a) Name and address: STEEL CITY TITLE, INC. 851 TRAFALGAR CT #132 E MAITLAND, FL 32751
   b) Telephone No.: 407 660-4422 Fax No. (Opt.) 407 660-4708
8. In addition to himself, owner designates the following person to receive a copy of the Lienor's Notice as provided in Section 713.13(1)(b), Florida Statutes:
   a) Name and address:
   b) Telephone No.: Fax No. (Opt.)
9. Expiration date of Notice of Commencement **(the expiration date is one year from the date of recording unless a different date is specified):**

WARNING TO OWNER: ANY PAYMENTS MADE BY THE OWNER AFTER THE EXPIRATION OF THE NOTICE OF COMMENCEMENT ARE CONSIDERED IMPROPER PAYMENTS UNDER CHAPTER 713, PART I, SECTION 713.13, FLORIDA STATUTES, AND CAN RESULT IN YOUR PAYING TWICE FOR IMPROVEMENTS TO YOUR PROPERTY; A NOTICE OF COMMENCEMENT MUST BE RECORDED AND POSTED ON THE JOB SITE BEFORE THE FIRST INSPECTION. IF YOU INTEND TO OBTAIN FINANCING, CONSULT YOUR LENDER OR AN ATTORNEY BEFORE COMMENCING WORK OR RECORDING YOUR NOTICE OF COMMENCEMENT.

STATE OF FLORIDA
COUNTY OF COLUMBIA

10. Signature of Owner or Owner's Authorized Office/Director/Partner/Manager
MARONDA HOMES INC. OF FLORIDA
Print Name STEVE HOGG, V.P.

The foregoing instrument was acknowledged before me, a Florida Notary, this 16 day of June, 20 09 by: Steve Hogg as Division Manager (type of authority, e.g. officer, trustee, attorney fact) for Maronda Homes Inc of Florida (name of party on behalf of whom instrument was executed).

Personally Known ✓ OR Produced Identification ____ Type ____

Notary Signature Jimmy D Webb Notary Stamp or Seal:

Notary Public State of Florida
Jimmy D Webb
My Commission DD847063
Expires 12/21/2012

—AND—

11. Verification pursuant to Section 92.525, Florida Statutes. Under penalties of perjury, I declare that I have read the foregoing and that the facts stated in it are true to the best of my knowledge and belief.

Signature of Natural Person Signing (in line #10 above.)

GEO-TECH, INC.

Engineering Consultants in Geotechnical • Environmental • Construction Materials Testing

FIELD DENSITY WORKSHEET

CLIENT: MARONDA HOMES GTM03101 LAKE City

DATE: 24 JULY 05

PROJECT NO.:

PROJECT NAME: TIMBERLANDS LOT #31

PERMIT NO.: #27942

EARTH CONTRACTOR: 330 SW MULBERRY DR.

TESTED BY: JWC

COMPACTION REQUIREMENT (%): 95% ❑ Standard Proctor ❑ Modified Proctor

FIELD CONTACT:

TOTAL ON-SITE TIME:

MILES FROM OFFICE:

❑ Limerock ❑ Subgrade ❑ Pipe Backfill ❑ Building Pad ❑ Building Footing ❑ Other

TEST LOCATION	LAB PROCTOR DENS.	LAB PROCTOR OMC	TEST DEPTH	PROBE DEPTH	% MOIST.	WET DENSITY (PCF)	DRY DENSITY (PCF)	% COMP.
CTR. of PAD	105.8	10.7	FG	12"	3.4	107.9	104.3	98.6
CTR. of E. F+G	〃	〃	〃	〃	6.8	107.8	100.9	95.4
CTR. of W. F+G.	〃	〃	〃	〃	6.2	107.9	101.6	96.0

REMARKS

* Density failed to meet minimum project requirement

** Retest indicates minimum density requirement was obtained.

( ) Client is aware of unsatisfactory test results.

2603 NW 74TH PLACE • GAINESVILLE, FLORIDA 32653 • PHONE: (352) 372-1274 • FAX: (352) 372-2721

PRODUCT APPROVAL SPECIFICATION SHEET

Location:_____ **Project Name:**_____

As required by Florida Statute 553.842 and Florida Administrative Code 9B-72, please provide the information and the product approval number(s) on the building components listed below if they will be utilized on the construction project for which you are **applying for a building permit on or after April 1, 2004**. We recommend you contact your local product supplier should you not know the product approval number for any of the applicable listed products. More information about statewide product approval can be obtained at www.floridabuilding.org

Category/Subcategory	Manufacturer	Product Description	Approval Number(s)
A. EXTERIOR DOORS			
1. Swinging			
2. Sliding			
3. Sectional			
4. Roll up			
5. Automatic			
6. Other			
B. WINDOWS			
1. Single hung			
2. Horizontal Slider			
3. Casement			
4. Double Hung			
5. Fixed			
6. Awning			
7. Pass -through			
8. Projected			
9. Mullion			
10. Wind Breaker			
11 Dual Action			
12. Other			
C. PANEL WALL			
1. Siding			
2. Soffits			
3. EIFS			
4. Storefronts			
5. Curtain walls			
6. Wall louver			
7. Glass block			
8. Membrane			
9. Greenhouse			
10. Other			
D. ROOFING PRODUCTS			
1. Asphalt Shingles			
2. Underlayments			
3. Roofing Fasteners			
4. Non-structural Metal Rf			
5. Built-Up Roofing			
6. Modified Bitumen			
7. Single Ply Roofing Sys			
8. Roofing Tiles			
9. Roofing Insulation			
10. Waterproofing			
11. Wood shingles /shakes			
12. Roofing Slate			

SEE ATTACHED

COLUMBIA COUNTY BUILDING DEPARTMENT
Received for FILE COPY
Code Compliance
PLANS EXAMINER

Website: www.floridabuilding.org

Effective April 1, 2004

Category/Subcategory (cont.)	Manufacturer	Product Description	Approval Number(s)
13. Liquid Applied Roof Sys			
14. Cements-Adhesives – Coatings			
15. Roof Tile Adhesive			
16. Spray Applied Polyurethane Roof			
17. Other			
E. SHUTTERS			
1. Accordion			
2. Bahama			
3. Storm Panels			
4. Colonial			
5. Roll-up			
6. Equipment			
7. Others			
F. SKYLIGHTS			
1. Skylight			
2. Other			
G. STRUCTURAL COMPONENTS			
1. Wood connector/anchor			
2. Truss plates			
3. Engineered lumber			
4. Railing			
5. Coolers-freezers			
6. Concrete Admixtures			
7. Material			
8. Insulation Forms			
9. Plastics			
10. Deck-Roof			
11. Wall			
12. Sheds			
13. Other			
H. NEW EXTERIOR ENVELOPE PRODUCTS			
1.			
2.			

SEE ATTACHED

The products listed below did not demonstrate product approval at plan review. I understand that at the time of inspection of these products, the following information must be available to the inspector on the jobsite; 1) copy of the product approval, 2) the performance characteristics which the product was tested and certified to comply with, 3) copy of the applicable manufacturers installation requirements.

I understand these products may have to be removed if approval cannot be demonstrated during inspection

Contractor or Contractor's Authorized Agent Signature

Print Name

Date

Location

Permit # **(FOR STAFF USE ONLY)**

Website: www.dlcpermits.org

Effective April 1, 2004

PRODUCT APPROVAL INFORMATION SHEET FOR THE CITY OF JACKSONVILLE, FLORIDA

Project Name: Maronda Homes inc of Florida Permit No:

Subdivision: TIMBERWOODS Lot: 31/1 Block: Date: 6/16/2009

Project Address: 330 SW MULBERRY DR LAKE CITY FL 32024

As required by Florida Statute 553.842 and Florida Administrative Code 9B-72, please provide the information and product approval number(s) for the building components listed below as applicable to the building construction project for the permit number listed above. You should contact your product supplier if you do not know your product approval number for any of the applicable listed products. Information regarding statewide product approval may be obtained at: www.floridabuilding.org.

COLUMBIA COUNTY BUILDING DEPARTMENT PLANS EXAMINER Received for Code Compliance FILE COPY

Catagory/Subcatagory	Manufacturer	Product Description	Limitation of Use	State #	Local #
A. EXTEROIR DOORS					
1. Swinging	Plastpro Inc./ Nanya Plastics Corp.	Fiberglass Dr Single Fiberglass Dr w/ Sidelite Fiberglass Dr w/ Dbl Sidelite Fiberglass Dr Single Glazed	Evaluated for use in locations adhering to the Florida Building Code and where pressure requirements as determined by ACSE 7 Minimum Design Loads For Building and Other Structures	FL 6184.1 FL 6184.3 FL 6184.5 FL 6729.1	
2. Sliding	Simonton Windows Florida Extruders	Sliding Glass Doors	500 72x80 SGD-R45 Milestone 1000 SGD	FL 5979.1 FL 8409.2	
3. Sectional					
4.Roll Up	Wayne Dalton Corp.	Garage Doors 130 10'-16' 9110/5102 8'-9' Garage Doors 140 10'-16' 9110/5102 8'-9'	As indicated in evaluation report and installation drawings. Not to be used in HVHZ	FL 9174.3 FL 9174.1 FL 9174.6 FL 9174.5	
B.WINDOWS					
1. Single Hung	Florida Extruders	Milestone Series 1000	83"x84" Max. windows have not been evaluated for use in High Velocity Hurricane Zones	FL 9262.2	
2. Horizontal Slider	Florida Extruders	Milestone Series 1000	74"x72 XO/OX" Max. windows have not been evaluated for use in High Velocity Hurricane Zones	FL 9236.1	
3. Casement					
4. Double Hung					
5. Fixed	Florida Extruders	Milestone Series 1000	73"x37" Max. windows have not been evaluated for use in High Velocity Hurricane Zones	FL 9242.2	
6. Awning					
7. Pass-through					
8. Projected					

9. Mullion	Florida Extruders	Milestone Tube Mull	Evaluated for use in locations adhering to the Florida Building Code and where pressure requirements as determined by ACSE 7 Minimum Design Loads For Building and Other Structures	FL 3136-R3	
10. Wind Breaker					
11. Dual Action					
12. Other					
C. PANEL WALL					
1. Siding					
2. Soffit	Alsco Metal Corp	Quad 4 Aluminum Soffit System	For use as Soffit only. Not for use in High Velocity Hurricane Zones	FL 4459-R1	
D. ROOFING PRODUCTS					
1. Asphalt Shingles	Owens Corning	Asphalt Shingles	This approval not for use in the HVAZ. All FBC sections that apply to counties except Broward and Miami-Dade must be followed	FL 10674-R1	
2. Underlayments	Black Warrior Roofing	15# Felt Paper		FL 2077	
3. Roofing Fastners					
4. Nonstructural Metal Roof					
5. Build-up Roof					
6. Modified Butimen					
7. Single Ply Roof					
8. Roofing Tiles					
9. Roofing Insulation					
10. Waterproofing					
11. Wood Shingle/Shakes					
12. Roofing Slate					
13. Liquid Applied Roofing					
14. Cement Adhesive Coats					
15. Roof Tile Adhesive					
16. Spray applied Polyurethane Roof					
17. Roof Vents	Lamanco	Off Ridge Vent	This approval not for use in the HVAZ. All FBC sections that apply to counties except Broward and Miami-Dade must be followed	FL 3792-R3	
E. SHUTTERS					
1. Storm Panels					

F. STRUCTURAL COMPONENTS					
1. Wood Connectors/Anchors	United Steel Products	Anchors, Hangers, etc Structural Components Wood Connectors	Subject to limitation and installation instructions specified in NOA 05-0105-05.	565-R3, 567-R3, 568-R2, 569-R3, 570-R2, 571-R2, 574-R2, 576-R3, 578-R2, 815-R1, 816-R1, 817-R1, 819-R1, 820-R2, 821-R1, 822-R1, 859-R4, 1247-R1, 2033-R2, 4928-R1, 5631-R1, 9835-R1, 10739, 11664, 11748, 11838, 11910	
2. Truss Planes	Mitek Industries, Inc.	Truss Connectors	No Limitation of Use	FL 2197-R1	
3. Engineered Lumber					
4. Railing					
5. Coolers-Freezers					
6. Concrete admixtures					
7. Material					
8. Insulation Forms					
9. Plastics					
10. Deck-Roof					
11. Wall					
12. Shed					
13. Other	Power Steel Inc.	Psbox8 Psbox8 (5-5/8)	Limits shall not exceed the affordable design load and spans. The lintels shall not be uses in a fire resistance rated assembly. A proper barrier is required when using corrosive lumber products in contact with the steel lintels. Not for use in HVHZ Miami or Broward counties at this time		
G. Skylights					
1. Skylights					
2. Other					
H. New Exterior Envelope Products					
1					
2					

In addition to completing the above list of manufactures, product description and State approval number for the products used on this project. It is the Contractors or Authorized Agent's responsibility to have a legible copy of each manufacture's printed instructions, along with the list above on the job site available to the inspector.

The products listed below did not demonstrate product approval at time of plan review. I understand that before these products can be inspected, they must be submitted for review for code compliance and approved by a Plans Examiner. This form will be revised to include each new product in the categories listed above and will be highlighted to indicate the new products and required information.

Authorized Project Agent: KENNETH WAYNE CAMPBELL JR
(Contractor or Design Professional) (Print Name) (Signature)

Company Name: Maronda Homes Inc of Florida

Mailing Address: 6800 South Point Pkwy Ste 300

City: Jacksonville State: Florida Zip Code: 32216

Telephone Number: (904) 296-1490 Fax Number: (904) 332-6375
Cell Phone Number: E-Mail Address:

This End Side Wall Installation

✓ Saves Space
✓ Saves Energy
✓ Reduces Fire Hazard

In-O-Vate Technologies, Inc.

the dryerbox®

CLASSIFIED c UL us Firestop Device

Installation Instructions

1. All standard American clothes dryers have an exhaust port in the center of the rear panel at the very bottom. Therefore, it is best to install Dryerbox® as low as possible so that the bottom tab is at or slightly below the finished floor level (Diagram A)—not applicable if stackable unit or on a pedestal.
2. Attach Dryerbox® to stud and bottom plate at a minimum of 3 corners with drywall screws.
3. We strongly recommend that the Dryerbox® be installed with the port up, although it will work lying on its side. Do not install with the port down unless the dryer is stackable unit or on pedestal. For downward exhaust direction use the "Down-Box™" Model 4D or 3D (more info online).
4. When installing the 4 ¼" deep Dryerbox® (Model 425) into a 2x4 wall, fir out the respective wall ¾" with a 1x2 firring strip to provide adequate depth or use the 3 ½" Model 350.
5. When installing in an exterior frame wall, you should add insulation or duct board to the back-side of box to minimize condensation and temperature transfer.
6. To achieve a one-hour F Rating the unit must be installed in accordance with Through-Penetration Firestop Systems. It is required that the voids along side the Dryerbox® and immediately above the Dryerbox® be filled tightly with fiberglass batt insulation or mineral wool batt insulation. (The entire wall cavity around the dryer vent may be filled with insulation.)
7. Gas line termination options: For galvanized pipe, wrap vinyl tape around throat where it penetrates. For corrugated stainless steel tubing, secure the CSST Termination Fitting with a Jamb nut to securely affix the termination to the receptacle. The gas port can be enlarged or relocated easily with a step bit.
8. The new Duct Support Tab (Diagram B) in top port will assist in maintaining the ideal penetration length of the 4" Snaplock rigid conduit of 2 inches. Create a "hook" by bending the tab at the weakened or scored locations. Break-away when duct is fully supported in-place. Seal penetration with foil tape or sealant caulk.
9. The snaplock pipe can be vented straight up to a roof jack (Diagram C), to a side-wall vent hood (Diagram D) or downwards to a crawl space or floor joist system with two elbows. The width of box and width of snaplock pipe will facilitate 16" o.c. stud spacing. Do not turn this box upside down unless stackable unit or on pedestal. Use the Model 4D or 3D to go down.
10. Use a Roto-zip-bit router tool to cut the drywall leaving a caulk joint for the painter (Diagram E). It is best to caulk or mud this void.
11. The baseboard is best terminated with a tapered back-cut into the rim extension on either side of box (Diagram E).
12. Exposed metal can be left unpainted or can be sprayed with an acrylic latex or oil-based (alkyd) paint when the rest of the wall, trim or baseboard is painted.

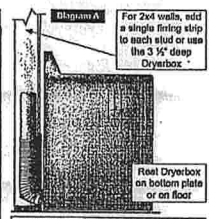

Venting Options

Vent up to a roof jack or soffit vent

Vent to a side or rear wall hood

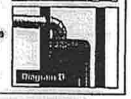

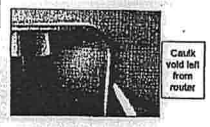

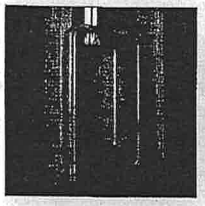

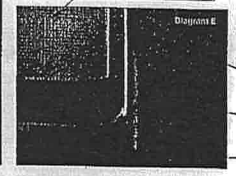

In-O-Vate Technologies, Inc
919 Saturn Street, Suite 21
Jupiter, Florida 33477 USA

Proudly Manufactured in the USA
US Patents 5,476,383 / 6,419,102
and Others Pending

Distributed By:

Toll Free: (888) 443-7937 — More installation instructions at www.dryerbox.com

Available throughout the country from supply houses, lumber yards and hardware centers who carry heating, ventilation and air conditioning parts and supplies.

Part Number: DB-425

AKA: DVB-425, TDD-425, IV 102000, IDB425

Model 425
(4 ¼" Deep)

8 51715 00141 3

Locate a distributor near you by using our Online Store Locator at www.dryerbox.com

US-435

MODELS 670, 671, 671MX, 688 & 689
CEILING/WALL FANS

BROAN®
To register this product visit www.broan.com.

READ AND SAVE THESE INSTRUCTIONS

WARNING

TO REDUCE THE RISK OF FIRE, ELECTRIC SHOCK, OR INJURY TO PERSONS, OBSERVE THE FOLLOWING:

1. Use this unit only in the manner intended by the manufacturer. If you have questions, contact the manufacturer at the address or telephone number listed in the warranty.
2. Before servicing or cleaning unit, switch power off at service panel and lock the service disconnecting means to prevent power from being switched on accidentally. When the service disconnecting means cannot be locked, securely fasten a prominent warning device, such as a tag, to the service panel.
3. Installation work and electrical wiring must be done by a qualified person(s) in accordance with all applicable codes and standards, including fire-rated construction codes and standards.
4. Sufficient air is needed for proper combustion and exhausting of gases through the flue (chimney) of fuel burning equipment to prevent backdrafting. Follow the heating equipment manufacturer's guidelines and safety standards such as those published by the National Fire Protection Association (NFPA), and the American Society for Heating, Refrigeration and Air Conditioning Engineers (ASHRAE), and the local code authorities.
5. When cutting or drilling into wall or ceiling, do not damage electrical wiring and other hidden utilities.
6. Ducted fans must always be vented to the outdoors.
7. Accessible for use over a bathtub or shower when installed in a GFCI protected branch circuit.
8. Install fan at least five feet (1.52 m) above the floor.
9. Never place a switch where it can be reached from a tub or shower.
10. This unit must be grounded.

CAUTION

1. For general ventilating use only. Do not use to exhaust hazardous or explosive materials and vapors.
2. To avoid motor bearing damage and noisy and/or unbalanced impeller, keep drywall spray, construction dust, etc. off power unit.
3. Please read specification label on product for further information and requirements.

USE AND CARE

DISCONNECT ELECTRIC POWER SUPPLY AND LOCK OUT SERVICE PANEL BEFORE SERVICING THE UNIT.

PREVENTATIVE MAINTENANCE

A clean fan provides better service. Disconnect the power supply and clean the fan as described below.

TO CLEAN GRILLE - Use a mild detergent, such as dishwashing liquid, and dry with a soft cloth. DO NOT USE ABRASIVE CLOTHS, STEEL WOOL PADS, OR SCOURING POWDERS.

TO CLEAN FAN ASSEMBLY - Unplug motor cord from receptacle. To remove motor plate: Find the single tab on the motor plate (located next to the receptacle). Push up near motor plate tab while pushing out on side of housing. Or insert a straight blade screwdriver into slot in housing (next to tab) and twist screwdriver. Gently vacuum fan, motor and interior of housing. METAL AND ELECTRICAL PARTS SHOULD NEVER BE IMMERSED IN WATER.

TO REASSEMBLE ALL ABOVE PARTS - Reverse all procedures explained above.

MAINTENANCE

The motor is permanently lubricated and never needs oiling. If the motor bearings are making excessive or unusual noises, replace the motor with the exact service motor. You should replace the impeller at the same time.

INSTALLATION

1. Remove motor plate from housing by pushing down on rib in plate while pulling out on side of housing. Motor plate may also be removed by inserting a straight blade screw driver into slot in housing and twisting screw driver. (FIG. 1)
2. Remove wiring cover from housing by pulling straight out. Unit is shipped ready to wire through the top of housing. To wire through the side, bend housing flap to cover top hole and expose side hole. DO NOT BREAK OFF FLAP. If flap breaks, Plug unused hole using standard electrical hole plug. (FIG. 2)
3. Turn off electrical power at service entrance and connect power cable to housing using appropriate connector. Wire black to black, white to white, and green to green or bare wire. Push all wiring up into corner of unit and replace wiring cover. Make sure cover holds housing flap in place against side or top of housing.
   CAUTION: DO NOT ALLOW WIRES TO EXTEND OUTSIDE OF WIRING BOX. Wire left exposed will become pinched or cut when motor plate is installed. Electrical shock may result. (FIG. 3)
4. Choose the location for your fan. For best performance, use the shortest possible duct run and a minimum number of elbows. For wall installations: Position unit so damper flap closes when unit is off.

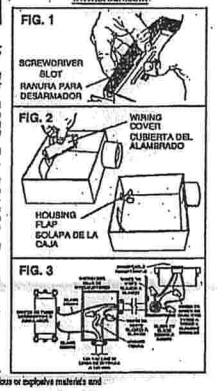

5. New installation prior to finishing the ceiling or wall: MAKE SURE HOUSING WILL BE FLUSH WITH FINISHED CEILING OR WALL. Slotted tabs are provided to locate housing flush with 1/2" ceiling or wall material. Bend tabs outward 90° (Use a screw driver if desired) and position housing so that tabs rest against bottom edge of joists (or front of stud). Nail housing to joist or stud using four nails to ensure a solid, quiet installation. Ceiling installations: Tabs on opposite side of housing can be bent outward to rest on top of 1/2" ceiling material and provide extra stability. (FIG. 4)
6. Replacement installation:
   Position housing so that it is centered in existing opening. MAKE SURE HOUSING IS FLUSH WITH FINISHED CEILING OR WALL. After making electrical and ductwork connections (see steps 4, 6 and 8), rest housing in place. Drive nails through the housing where indicated by arrows. (FIG. 5)
7. New installation in an existing ceiling or wall:
   From above ceiling or behind wall, position housing against shut joist. Trace outline of housing on ceiling or wall material. (FIG. 6) Set housing aside and cut opening. Place housing in opening such that its BOTTOM EDGE IS FLUSH WITH FINISHED CEILING OR WALL. 1/2" ceiling or wall material: Bend tabs outward 90° (use a screwdriver if desired) to rest on top of ceiling or wall material and provide extra stability. Nail in place using four nails to ensure a solid, quiet installation. (FIG. 7)
8. Install 3" round duct onto damper/duct connector. If right duct work is used, the seam should be positioned at top of damper/duct connector. Tape the joint and extend ducting to a wall cap or roof cap. Make sure the damper operates freely. Ceiling or wall can now be finished.

   NOTE: If damper detaches from duct connector, reinsert it by squeezing duct connector top-to-bottom while guiding posts on damper flap into holders in duct connector. The horizontal rib should be on the outside surface of damper flap and damper flap should move freely inside of duct connector.
9. Replace the motor plate removed in Step 1. Insert two motor plate tabs into slots in housing and then pivot motor plate up until the third tab on plate snaps into matching slot in housing. Make sure tabs hold motor plate securely in place. Plug in motor. (FIG. 8)
10. Squeeze grille spring together and insert springs into slots in motor plate. (FIG. 9) Push grille up against ceiling or wall. (FIG. 10)

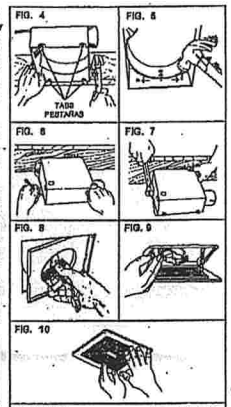

SERVICE PARTS	KEY NO.	PART NUMBER NO. PIEZ.	NO. CÓDIGO	PIEZAS DE SERVICIO
Grille Assembly (Includes Key Nos 1 & 2)	1	97011723	1	Ensamble de la parrilla (Incluye códigs Nos. 1 y 2)
Grille Spring (2 Required)	2	99140187	2	Resorte de la parrilla (Son necesarios 2)
Motor (Model 670)	3	99003254	3	Motor (Modelo 670)
Motor (Model 671, 671MX)		99003255		Motor (Modelo 671, 671MX)
Motor (Model 688)		97012041		Motor (Modelo 688)
Motor (Model 689)		97012042		Motor (Modelo 689)
Motor Plate	4	99008791	4	Placa del motor
Blower Wheel (Model 670, 671, 671MX)	5	99020202	5	Rotor de aspiр (Modelo 670, 671, 671MX)
Blower Wheel (Model 688 & 689)		99111002		Rotor de aspiр (Modelo 688 y 689)
Nut #8-32 (2 Required)	6	99260428	6	Tuercas No. 6-32 (Son necesarias 2)
Damper/Duct Connector (Models 670, 671, 671MX, 688, 689)	*7	97015377	7	Conexión humidificador/Ducto (Modelos 670, 671, 671MX, 688 y 689)
Damper/Duct Connector (Model 1087FMTL)	8	97015377	8	Conexión humidificador/Ducto (Modelos 1087FMTL)
Receptacle	9	99271252	9	Receptáculo
Wiring Cover	10	99006773	10	Cubierta del alambrado
Housing/Assembly	11	97008318	11	Ensamble de la caja
Screw, #8-18	12	99150478	12	Tornillo, #8-18

Always order replacement parts by "PART NUMBER" not by "KEY NO."
Siempre encargue piezas de reemplazo por "NO. PIEZA" y no por "NO. CÓDIGO"

SERVICE PARTS — PIEZAS DE SERVICIO

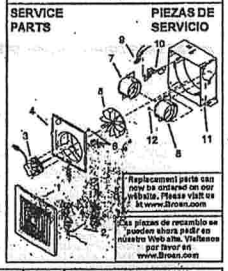

Replacement parts can now be ordered on our website. Please visit us at www.Broan.com

Las piezas de recambio se pueden ahora pedir en nuestro Web site. Visítenos por favor en www.Broan.com

REVISIONS :

Maronda Homes
(407) 321-0064 4005 MARONDA WAY SANFORD, FLORIDA

EXHAUST DETAILS

2 of 2

RELEASE DATE: Feb. 16, 2009

SHEET: EXD

NAN YA PLASTICS CORP.
PLASTPRO INC.
9 PEACH TREE HILL ROAD
LIVINGSTON, NEW JERSEY 07039
PH: 800-779-0561 FAX: 973-758-4001

DISTINCTION SERIES 3'0" x 6'8" OPAQUE FIBERGLASS DOOR WITH SIDELITE LIP LITE SCREW FRAME INSWING / OUTSWING

GENERAL NOTES

1. THIS PRODUCT HAS BEEN EVALUATED AND IS IN COMPLIANCE WITH THE FLORIDA BUILDING CODE EXCLUDING THE "HIGH VELOCITY HURRICANE ZONE".
2. PRODUCT ANCHORS SHALL BE AS LISTED AND SPACED AS SHOWN ON DETAILS. ANCHOR EMBEDMENT TO BASE MATERIAL SHALL BE BEYOND WALL DRESSING OR STUCCO.
3. WHEN USED IN WIND-BORNE DEBRIS REGIONS THE OPAQUE DOOR PANEL COMPLIES WITH SECTION 1609.1.4 OF THE FLORIDA BUILDING CODE AS AN IMPACT RESISTANT PRODUCT AND DOES NOT REQUIRE THE USE OF AN EXTERNAL IMPACT RESISTANT COVERING; THE SIDELITE MUST BE PROTECTED WITH AN IMPACT RESISTANT COVERING THAT COMPLIES WITH SECTION 1609.1.4. THIS PRODUCT DOES NOT MEET THE REQUIREMENTS FOR ENHANCED PROTECTION OF ESSENTIAL FACILITIES AS DEFINED IN ASTM E1886.
4. FOR 2X STUD FRAMING CONSTRUCTION, ANCHORING OF THESE UNITS SHALL BE THE SAME AS THAT SHOWN FOR 2X BUCK MASONRY CONSTRUCTION.
5. CONDITIONS NOT COVERED BY THIS DRAWING ARE SUBJECT TO FURTHER ENGINEERING ANALYSIS.

TABLE OF CONTENTS

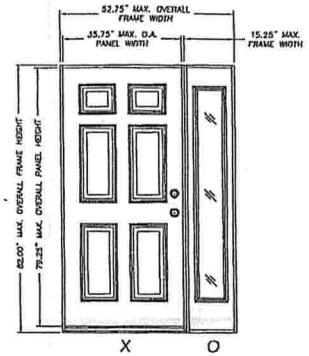

SINGLE OPAQUE DOOR WITH SIDELITE

TYPE	OVERALL FRAME DIMENSION	SIDELITE DAYLIGHT DIMENSION	GLASS TYPE	DESIGN PRESSURE (PSF) POSITIVE	DESIGN PRESSURE (PSF) NEGATIVE
INSWING	52.75" x 82.00"	7.00" x 63.00"	1/8" TEMP. – AR – 1/8" TEMP.	+50.0	-50.0
OUTSWING	52.75" x 80.37"	7.00" x 63.00"		+50.0	-50.0

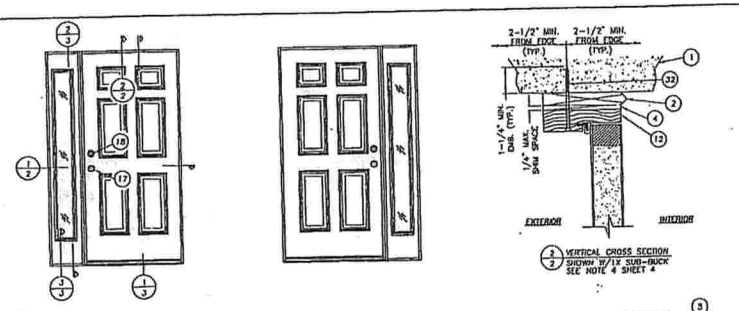

2/2 VERTICAL CROSS SECTION SHOWN W/1X SUB-BUCK SEE NOTE 4 SHEET 4

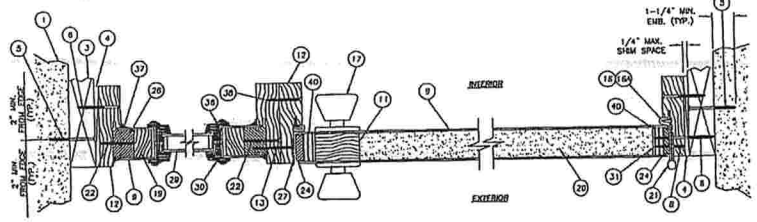

1/2 HORIZONTAL CROSS SECTION OUTSWING CONFIGURATION

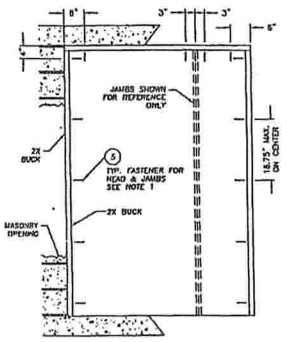

BUCK ANCHORING

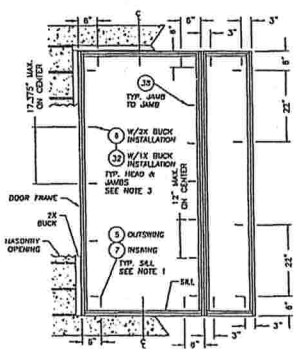

FRAME ANCHORING

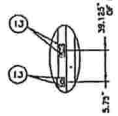

STRIKE PLATE DETAIL

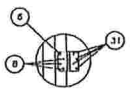

HINGE DETAIL

HINGES (3) LOCATED @ 9.46, 40.71" AND 71.865" FROM TOP OF FRAME TO CENTER LINE OF HINGE.

NOTES:

1. 3/16" TAPCONS REQUIRE A MINIMUM 2" CLEARANCE TO MASONRY EDGES AND A MINIMUM 2-1/4" CLEARANCE TO ADJACENT TAPCONS.
2. 1/4" TAPCONS REQUIRE A MINIMUM 2-1/2" CLEARANCE TO MASONRY EDGES AND A MINIMUM 3" CLEARANCE TO ADJACENT TAPCONS.
3. WHEN ANCHORING DOOR FRAME UTILIZING A 1X BUCK THEN ITEM #6 IS SUBSTITUTED WITH ITEM #32 (1/4" X 3-3/4" ELCO ANCHOR). THE QUANTITY AND SPACING OF ANCHORS DOES NOT CHANGE. SEE NOTE 2.
4. PER FBC SECTION 1214.5.4.3, FOR SUB-BUCKS LESS THAN 1-1/2" THICK, THE WINDOW SHALL BE ANCHORED THROUGH THE MAIN FRAME DIRECTLY INTO THE MASONRY. TAPCONS ARE SUBSTITUTED FOR THE ANCHORS.
5. SIDELITE PANEL SECURED TO THE SIDELITE FRAME WITH (4) OF ITEM #22 LOCATED 10", 30.5", 51" AND 71.5" FROM THE TOP OF EACH JAMB AND (2) OF ITEM #22 IN THE HEAD AND SILL 3" FROM EACH END.

ITEM	DESCRIPTION	MATERIAL
1	MASONRY	CONC.
2	1X BUCK	WOOD
3	2X BUCK	WOOD
4	SIDE 1/4" MAX. GAP	WOOD
5	3/16" x 2-1/4" TAPCON	STEEL
6	#10 x 2-1/2" PPH WOOD SCREW	STEEL
7	3/16" x 2-1/4" TAPCON	STEEL
8	#8 x 3/4" PPH WOOD SCREW	STEEL
9	DOOR SKIN (ABIL 0.025" THICK)	FIBERGLASS
10	INSWING VINYL DOOR BOTTOM SWEEP BY ENDURA	VINYL
10A	VINYL DOOR BOTTOM SWEEP #3038 BY HOLM IND.	VINYL
11	REINFORCEMENT WOOD FOR LOCKS	WOOD
12	JAMBS JAMBS FOR FRAME HEAD & MAKE JAMBS	WOOD
13	#8 x 2-1/2" PHILLIPS FLAT HEAD WOOD SCREW	STEEL
14	DOOR BOTTOM RAIL	FOAM PVC
15	INSWING ADJUSTABLE THRESHOLD BY ENDURA	AL/WOOD
15A	INSWING ADJUSTABLE ALUMINUM THRESHOLD BY OLP	AL/WOOD
16	FORCE 3 WEATHER STRIPPING BY ENDURA	FOAM
16A	COMPRESSION WEATHER STRIP OLON 600 BY SCHLEGEL	FOAM
17	ANVILET MITED ENTRY GRADE 2	STEEL
18	ANVILET CLOSURE GRADE 2	STEEL
19	CONTINUOUS SIDELITE SILL REINF.	WOOD
20	POLYURETHANE FOAM BY NANYA	FOAM
21	4" x 4" BUTT HINGE	STEEL
22	#6 x 2" PPH WOOD SCREW	STEEL
23	HOT WATER	-
24	HINGE & LATCH STILE	FOAM PVC
25	DOOR TOP RAIL	FOAM PVC
26	SIDELITE SILL	FOAM PVC
27	SIDES PLATE	STEEL
28	OUTSWING BUMP THRESHOLD	ALUM
29	1" THICK INSULATED GLASS 1/8" TEMP. – AR – 1/8" TEMP.	GLASS
30	LIP LITE, DOL/ACTION REFLECTIONS HP	POLYPROPYLENE
31	#8 x 1" PPH WOOD SCREW	STEEL
32	1/4" x 3-3/4" TAPCON	STEEL
33	SIDELITE TOP & BOTTOM RAIL	FOAM PVC
34	SPACE WOOD 3/8" x 3/8"	WOOD
35	GLAZING COMPOUND	SILICONE
36	#8 x 1-1/2" PPH LIP LITE FRAME SCREW	STEEL
37	SEALANT	SILICONE
38	#10 x 3" SCREW	STEEL
39	SIDELITE SPACER	PVC
40	HINGE & LATCH STILE REINFORCEMENT COVER	UA

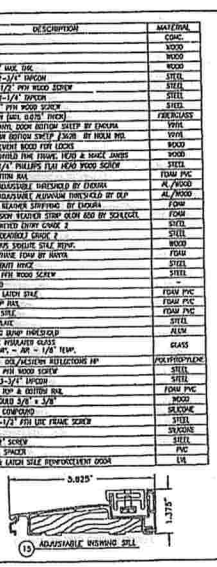

Florida Product Approval #6184.3

REVISIONS :

Maronda Homes
4005 MARONDA WAY SANFORD, FLORIDA
(407) 321-0064

FIBERGLASS EXTERIOR DOORS
IN SWING / OUT SWING DOOR
WITH (ONE) SIDELITE
RELEASE DATE: 09/02/08

SHEET:
ED-1

NAN YA PLASTICS CORP.
PLASTPRO INC.
9 PEACH TREE HILL ROAD
LIVINGSTON, NEW JERSEY 07039
PH: 800-779-0561 FAX: 973-758-4001

DISTINCTION SERIES 3'0" x 6'8" OPAQUE FIBERGLASS DOOR WITH SIDELITES LIP LITE SCREW FRAME INSWING / OUTSWING

GENERAL NOTES

1. THIS PRODUCT HAS BEEN EVALUATED AND IS IN COMPLIANCE WITH THE FLORIDA BUILDING CODE EXCLUDING THE "HIGH VELOCITY HURRICANE ZONE".
2. PRODUCT ANCHORS SHALL BE AS LISTED AND SPACED AS SHOWN ON DETAIL. ANCHOR EMBEDMENT TO BASE MATERIAL SHALL BE BEYOND WALL DRESSING OR STUCCO.
3. WHEN USED IN WIND-BORNE DEBRIS REGIONS THE OPAQUE DOOR PANEL COMPLIES WITH SECTION 1609.1.4 OF THE FLORIDA BUILDING CODE AS AN IMPACT RESISTANT PRODUCT AND DOES NOT REQUIRE THE USE OF AN EXTERNAL IMPACT RESISTANT COVERING; THE SIDELITE MUST BE PROTECTED WITH AN IMPACT RESISTANT COVERING THAT COMPLIES WITH SECTION 1609.1.4. THIS PRODUCT DOES NOT MEET THE REQUIREMENTS FOR ENHANCED PROTECTION OF ESSENTIAL FACILITIES AS DEFINED IN ASTM E1996.
4. FOR 2X STUD FRAMING CONSTRUCTION, ANCHORING OF THESE UNITS SHALL BE THE SAME AS THAT SHOWN FOR 2X BUCK MASONRY CONSTRUCTION.
5. CONDITIONS NOT COVERED BY THIS DRAWING ARE SUBJECT TO FURTHER ENGINEERING ANALYSIS.

TABLE OF CONTENTS

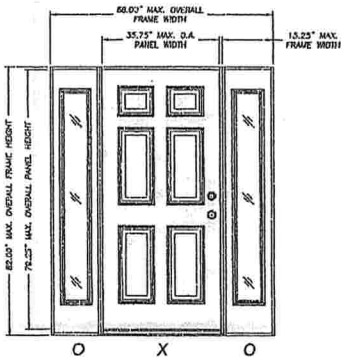

SINGLE OPAQUE DOOR WITH SIDELITES

TYPE	OVERALL FRAME DIMENSION	SIDELITE DAYLIGHT DIMENSION	GLASS TYPE	DESIGN PRESSURE (PSF) POSITIVE	DESIGN PRESSURE (PSF) NEGATIVE
INSWING	68.00" x 82.00"	7.00" x 63.00"	1/8" TEMP. – AIR – 1/8" TEMP.	+50.0	-50.0
OUTSWING	68.00" x 80.37"	7.00" x 63.00"		+50.0	-50.0

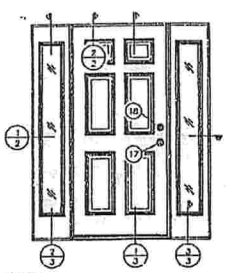

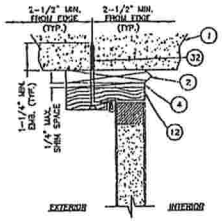

2/2 VERTICAL CROSS SECTION SHOWN W/1X SUB-BUCK SEE NOTE 4 SHEET 4

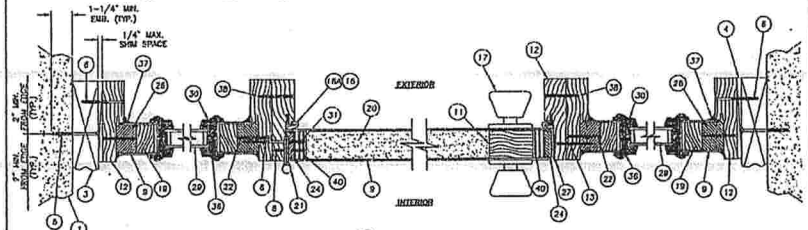

1/2 HORIZONTAL CROSS SECTION INSWING CONFIGURATION

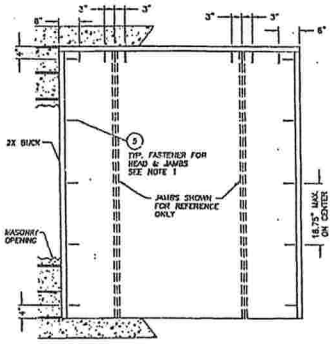

BUCK ANCHORING

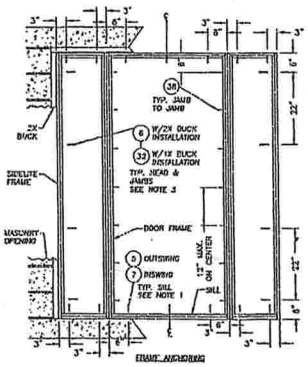

FRAME ANCHORING

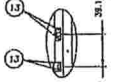

STRIKE PLATE DETAIL

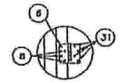

HINGE DETAIL

HINGES (3) LOCATED @ 8.46, 40.71" AND 71.205" FROM TOP OF FRAME TO CENTER LINE OF HINGE.

NOTES:

1. 3/16" TAPCONS REQUIRE A MINIMUM 2" CLEARANCE TO MASONRY EDGES AND A MINIMUM 2-1/4" CLEARANCE TO ADJACENT TAPCONS.
2. 1/4" TAPCONS REQUIRE A MINIMUM 2-1/2" CLEARANCE TO MASONRY EDGES AND A MINIMUM 3" CLEARANCE TO ADJACENT TAPCONS.
3. WHEN ANCHORING DOOR FRAME UTILIZING A 1X BUCK THEN ITEM #8 IS SUBSTITUTED WITH ITEM #32 (1/4" X 3-3/4" ELCO ANCHOR). THE QUANTITY AND SPACING OF ANCHORS DOES NOT CHANGE. SEE NOTE 2.
4. PER FBC SECTION 1714.5.4.2, FOR SUB-BUCKS LESS THAN 1-1/2" THICK, THE WINDOW SHALL BE ANCHORED THROUGH THE MAIN FRAME DIRECTLY INTO THE MASONRY. TAPCONS ARE SUBSTITUTED FOR THE ANCHORS.
5. SIDELITE PANEL SECURED TO THE SIDELITE FRAME WITH (6) OF ITEM #32 LOCATED 10", 30.5", 51" AND 71.5" FROM THE TOP OF EACH JAMB AND (2) OF ITEM #22 IN THE HEAD & SILL 3" FROM EACH END.

ITEM	DESCRIPTION	MATERIAL
1	MASONRY	CONC
2	1X BUCK	WOOD
3	2X BUCK	WOOD
4	SKIN 1/4" MIN. THK.	WOOD
5	3/16" x 2-3/4" TAPCON	STEEL
6	#10 x 2-1/2" PAN WOOD SCREW	STEEL
7	3/16" x 3-1/4" TAPCON	STEEL
8	#8 x 3/4" PAN WOOD SCREW	STEEL
9	DOOR SKIN (NAL 0.075" THICK)	FIBERGLASS
10	INSWING VINYL DOOR BOTTOM SWEEP BY ENDURA	VINYL
10A	VINYL DOOR BOTTOM SWEEP ANCHOR BY HOLM INC.	VINYL
11	REINFORCEMENT WOOD FOR LOCKS	WOOD
12	FENCE JOINED PINE FRAME, HEAD & HINGE JAMBS	WOOD
13	#8 x 2-1/4" PHILLIPS FLAT HEAD WOOD SCREW	STEEL
14	DOOR BOTTOM RAIL	FOAM PVC
15	INSWING ADJUSTABLE THRESHOLD BY ENDURA	AL/WOOD
15A	INSWING ADJUSTABLE ALUMINUM THRESHOLD BY DEP	AL/WOOD
16	FENCE & WEATHER STRIPPING BY ENDURA	FOAM
16A	COMPRESSION WEATHER STRIP OLIVE 650 BY SCHLEGEL	FOAM
17	KNOBSET ALTED STORY GRADE 2	STEEL
18	KNOBSET DEADBOLT GRADE 2	STEEL
19	CONTINUOUS SIDELITE SILL REINF.	WOOD
20	POLYURETHANE FOAM BY HANNA	FOAM
21	1" x 4" BUTT HINGE	STEEL
22	OUTSWING JAMB THRESHOLD	ALUM.
23	NOT USED	-
24	HINGE & LATCH STILE	FOAM PVC
25	DOOR TOP RAIL	FOAM PVC
26	SIDELITE STILE	FOAM PVC
27	STRIKE PLATE	STEEL
28	OUTSWING BUMP THRESHOLD	ALUM.
29	1" THICK INSULATED GLASS 1/8" TEMP. – AIR – 1/8" TEMP.	GLASS
30	LIP LITE TAPCONSTAPE REFLECTORS 1M	POLYPROPYLENE
31	#8 x 1" PAN WOOD SCREW	STEEL
32	1/4" x 3-3/4" TAPCON	STEEL
33	SIDELITE TOP & BOTTOM RAIL	FOAM PVC
34	SHOE MOLD 3/4" x 3/8"	WOOD
35	GLAZING COMPOUND	SILICONE
36	#8 x 1-1/2" PAN LIP LITE FRAME SCREW	STEEL
37	SEALANT	SILICONE
38	#10 x 2" SCREW	STEEL
39	SIDELITE SPACER	PVC
40	HINGE & LATCH STILE REINFORCEMENT DOOR	OIL

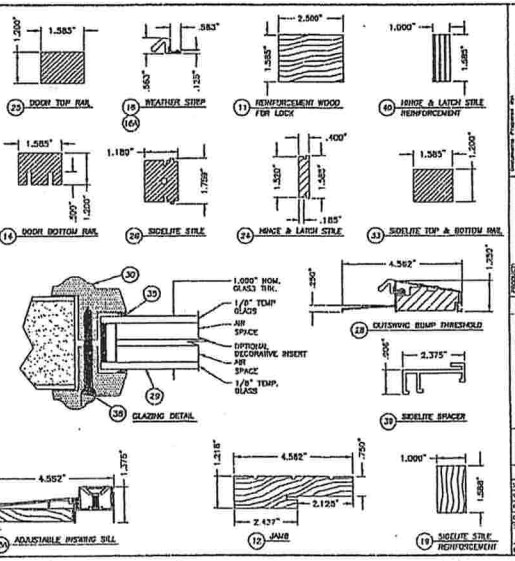

Florida Product Approval #6184.5

Maronda Homes
14011 321-0064 4005 MARONDA WAY SANFORD, FLORIDA

REVISIONS :

FIBERGLASS EXTERIOR DOORS
IN SWING / OUT SWING DOOR
WITH (TWO) SIDELITES
RELEASE DATE: 09/02/08

SHEET:
ED-2

NAN YA PLASTICS CORP.
PLASTPRO INC.
9 PEACH TREE HILL ROAD
LIVINGSTON, NEW JERSEY 07039
PH: 800-779-0561 FAX: 973-758-4001

DISTINCTION SERIES 3'0" x 6'8" FLUSH GLAZED FIBERGLASS DOOR INSWING / OUTSWING "NON-IMPACT"

GENERAL NOTES

1. THIS PRODUCT HAS BEEN EVALUATED AND IS IN COMPLIANCE WITH THE 2004 FLORIDA BUILDING CODE EXCLUDING THE "HIGH VELOCITY HURRICANE ZONE".
2. PRODUCT ANCHORS SHALL BE AS LISTED AND SPACED AS SHOWN ON DETAILS. ANCHOR EMBEDMENT TO BASE MATERIAL SHALL BE BEYOND WALL DRESSING OR STUCCO.
3. WHEN USED IN AREAS REQUIRING WIND-BORNE DEBRIS PROTECTION THIS PRODUCT IS REQUIRED TO BE PROTECTED WITH AN IMPACT RESISTANT COVERING THAT COMPLIES WITH SECTION 1609.1.4 OF THE FLORIDA BUILDING CODE.
4. FOR 2X STUD FRAMING CONSTRUCTION, ANCHORING OF THESE UNITS SHALL BE THE SAME AS THAT SHOWN FOR 2X BUCK MASONRY CONSTRUCTION.
5. CONDITIONS NOT COVERED BY THIS DRAWING ARE SUBJECT TO FURTHER ENGINEERING ANALYSIS.

TABLE OF CONTENTS

SHEET #	DESCRIPTION
1	TYPICAL ELEVATION, DESIGN PRESSURES & GENERAL NOTES
2	VERTICAL & HORIZONTAL CROSS SECTIONS
3	BUCK & FRAME ANCHORING
4	BILL OF MATERIALS, GLAZING DETAIL & COMPONENTS

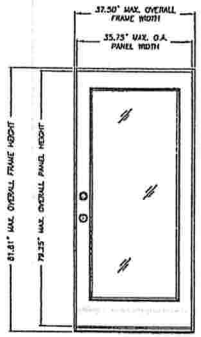

SINGLE DOOR

TYPE	OVERALL FRAME DIMENSION	OVERALL DAYLIGHT DIMENSION	GLASS TYPE	DESIGN PRESSURE (PSF) POSITIVE	DESIGN PRESSURE (PSF) NEGATIVE
INSWING	37.50" x 81.81"	26.25" x 63.93"	1/8" TEMPERED – AIR – 1/8" TEMPERED	+50.0	-50.0
OUTSWING	37.50" x 80.70"	26.25" x 65.93"		+50.0	-50.0

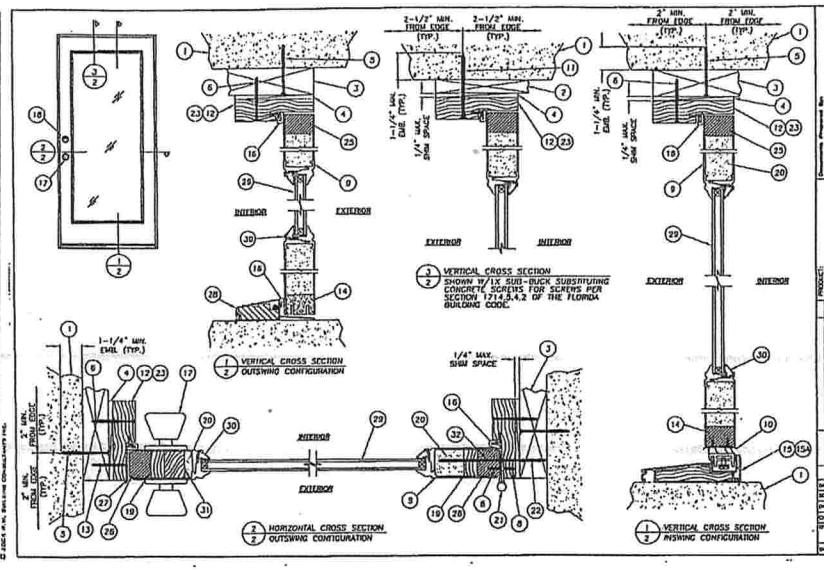

1/2 VERTICAL CROSS SECTION OUTSWING CONFIGURATION

3/2 VERTICAL CROSS SECTION SHOWN W/1X SUB-BUCK SUBSTITUTING CONCRETE SCREWS FOR SCREWS PER SECTION 1714.5.4.2 OF THE FLORIDA BUILDING CODE.

2/2 HORIZONTAL CROSS SECTION OUTSWING CONFIGURATION

1/2 VERTICAL CROSS SECTION INSWING CONFIGURATION

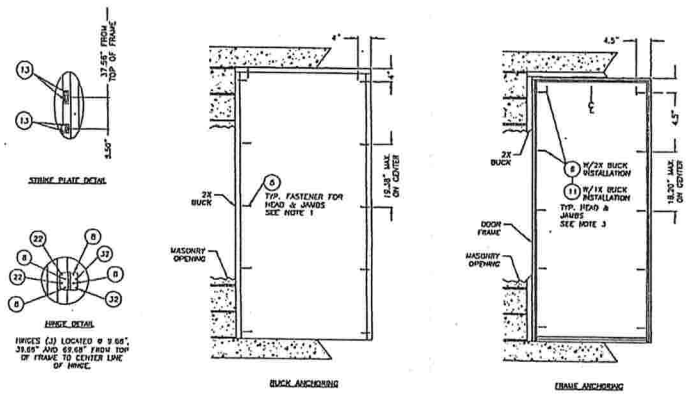

STRIKE PLATE DETAIL

HINGE DETAIL

HINGES (3) LOCATED @ 9.56", 39.65" AND 69.68" FROM TOP OF FRAME TO CENTER LINE OF HINGE.

BUCK ANCHORING

FRAME ANCHORING

NOTES:

1. 3/16" TAPCONS REQUIRE A MINIMUM 2" CLEARANCE TO MASONRY EDGES AND A MINIMUM 2-1/4" CLEARANCE TO ADJACENT TAPCONS.
2. 1/4" TAPCONS REQUIRE A MINIMUM 2-1/2" CLEARANCE TO MASONRY EDGES AND A MINIMUM 3" CLEARANCE TO ADJACENT TAPCONS.
3. WHEN ANCHORING DOOR FRAME UTILIZING A 1X BUCK THEN ITEM #8 IS SUBSTITUTED WITH ITEM #11 (1/4" X 3-3/4" ELCO ANCHOR). THE QUANTITY AND SPACING OF ANCHORS DOES NOT CHANGE. SEE NOTE 2.

ITEM	DESCRIPTION	MATERIAL
1	MASONRY	CONC.
2	1X BUCK	WOOD
3	2X BUCK	WOOD
4	1/4" MAX. SHIM SPACE	WOOD
5	3/16" x 2-3/4" TAPCON	STEEL
6	#10 x 2-1/2" PHILLIPS FLAT HEAD SCREW	STEEL
7	GLAZING SPACER	ALUM.
8	#8 x 3/4" PAN WOOD SCREW	STEEL
9	DOOR SKIN (MIN. 0.075" THICK)	FIBERGLASS
10	WEATHER-STOP 3647 WEW INDUSTRIES	VINYL
11	1/4" x 3-3/4" TAPCON	STEEL
12	TWICE JOINTED PINE FRAME, HEAD & JAMBS	WOOD
13	#8 x 2-1/4" PHILLIPS FLAT HEAD SCREW	STEEL
14	BOTTOM RAIL	FOAM PVC
15	INSWING ADJUSTABLE THRESHOLD BY TAPLOW	AL./WOOD
15A	INSWING ADJUSTABLE ALUMINUM THRESHOLD BY ECP	AL./WOOD
16	0-LOY END WEATHER STRIP SCREWED	FOAM
17	KWIKSET ULTRA ENTRY GRADE 2	STEEL
18	KWIKSET DEADBOLT GRADE 1	STEEL
19	CONTINUOUS LATCH AND HINGE STILE REINFORCEMENT	WOOD
20	POLYURETHANE FOAM BY HARDA	FOAM
21	4" x 4" BUTT HINGE	STEEL
22	#8 x 2-1/2" PAN WOOD SCREW	STEEL
23	POLY FRIER JAMB	COMP. / VINYL
24	GLAZING COMPOUND DOW 995	SILICONE
25	TOP RAIL	FOAM PVC
26	LATCH & HINGE STILE	FOAM PVC
27	STRIKE PLATE	STEEL
28	OUTSWING BUMP THRESHOLD	ALUM.
29	5/8" INSULATED GLASS 1/8" TEMPERED – AIR – 1/8" TEMPERED	GLASS
30	GLAZING BEAD	PVC
31	LOCK REINFORCEMENT	WOOD
32	#8 x 3-1/2" PAN WOOD SCREW	STEEL

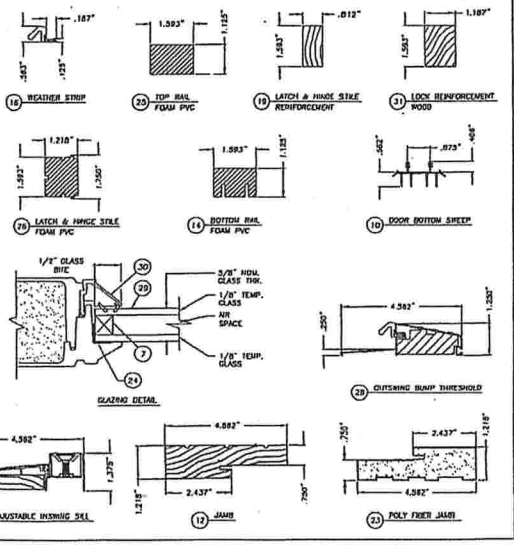

Florida Product Approval #6729.1

REVISIONS :

COPYRIGHT © 2002 MARONDA HOMES

Maronda Homes
4005 MARONDA WAY SANFORD, FLORIDA
(407) 321-0064

FIBERGLASS EXTERIOR DOORS
IN SWING / OUT SWING DOOR
GLAZED DOOR
RELEASE DATE: 09/02/08

SHEET:
ED-4

NAN YA PLASTICS CORP.
PLASTPRO INC.
9 PEACH TREE HILL ROAD
LIVINGSTON, NEW JERSEY 07039
PH: 800-779-0561 FAX: 973-758-4001

DISTINCTION SERIES
3'0" x 6'8" OPAQUE FIBERGLASS DOOR
INSWING / OUTSWING

GENERAL NOTES

1. THIS PRODUCT HAS BEEN EVALUATED AND IS IN COMPLIANCE WITH THE FLORIDA BUILDING CODE EXCLUDING THE "HIGH VELOCITY HURRICANE ZONE".
2. PRODUCT ANCHORS SHALL BE AS LISTED AND SPACED AS SHOWN ON DETAILS. ANCHOR EMBEDMENT TO BASIC MATERIAL SHALL BE BEYOND WALL DRESSING OR STUCCO.
3. WHEN USED IN WIND-BORNE DEBRIS REGIONS THIS PRODUCT COMPLIES WITH SECTION 1609.1.4 OF THE FLORIDA BUILDING CODE AS AN IMPACT RESISTANT PRODUCT AND DOES NOT REQUIRE THE USE OF AN EXTERNAL IMPACT RESISTANT COVERING. THIS PRODUCT DOES NOT MEET THE REQUIREMENTS FOR ENHANCED PROTECTION OF ESSENTIAL FACILITIES AS DEFINED IN ASTM E1996.
4. FOR 2X STUD FRAMING CONSTRUCTION, ANCHORING OF THESE UNITS SHALL BE THE SAME AS THAT SHOWN FOR 2X BUCK MASONRY CONSTRUCTION.
5. CONDITIONS NOT COVERED BY THIS DRAWING ARE SUBJECT TO FURTHER ENGINEERING ANALYSIS.

TABLE OF CONTENTS

SHEET #	DESCRIPTION
1	TYPICAL ELEVATION, DESIGN PRESSURES & GENERAL NOTES
2	HORIZONTAL & VERTICAL CROSS SECTIONS
3	BUCK & FRAME ANCHORING
4	BILL OF MATERIALS & COMPONENTS

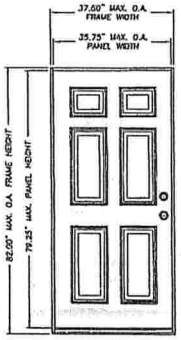

SINGLE OPAQUE DOOR

TYPE	OVERALL FRAME DIMENSION	DESIGN PRESSURE (PSF)	
		POSITIVE	NEGATIVE
INSWING	37.50" x 82.00"	+65.0	-70.0
OUTSWING	37.50" x 80.37"	+65.0	-65.0

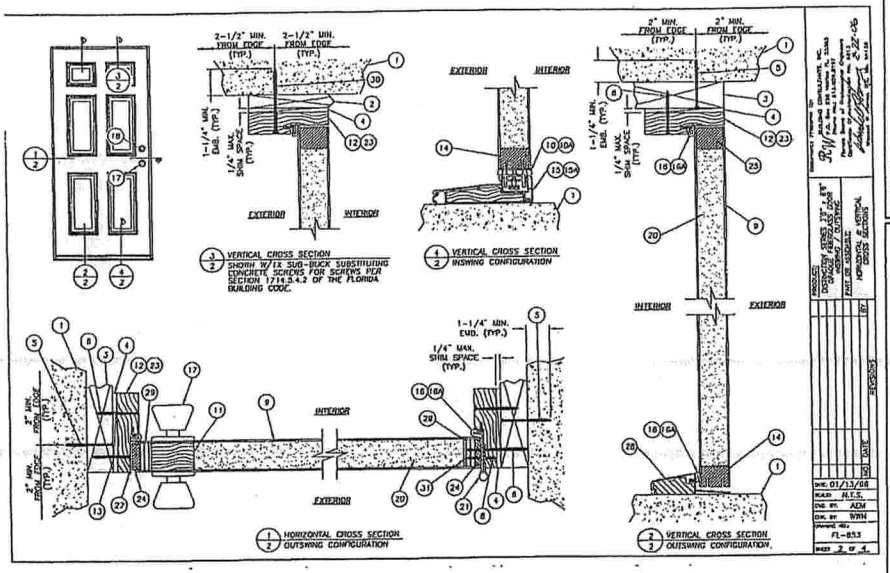

3/2 VERTICAL CROSS SECTION
SHOWN W/1X SUB-BUCK SUBSTITUTING CONCRETE SCREWS FOR SCREWS PER SECTION 1714.3.4.2 OF THE FLORIDA BUILDING CODE.

1/2 VERTICAL CROSS SECTION
INSWING CONFIGURATION

1/2 HORIZONTAL CROSS SECTION
OUTSWING CONFIGURATION

2/2 VERTICAL CROSS SECTION
OUTSWING CONFIGURATION.

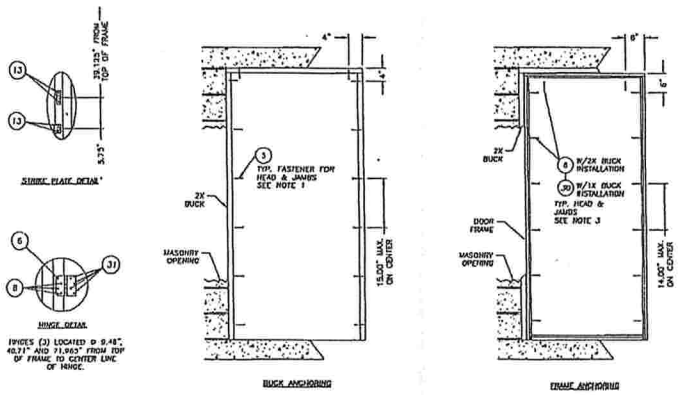

BUCK ANCHORING

FRAME ANCHORING

NOTES:

1. 3/16" TAPCONS REQUIRE A MINIMUM 2" CLEARANCE TO MASONRY EDGES AND A MINIMUM 2-1/4" CLEARANCE TO ADJACENT TAPCONS.
2. 1/4" TAPCONS REQUIRE A MINIMUM 2-1/2" CLEARANCE TO MASONRY EDGES AND A MINIMUM 3" CLEARANCE TO ADJACENT TAPCONS.
3. WHEN ANCHORING DOOR FRAME UTILIZING A 1X BUCK THEN ITEM #6 IS SUBSTITUTED WITH ITEM #30 (1/4" x 3-3/4" ELCO ANCHOR). THE QUANTITY AND SPACING OF ANCHORS DOES NOT CHANGE. SEE NOTE 2.

ITEM	DESCRIPTION	MATERIAL
1	MASONRY	CONC.
2	1X BUCK	WOOD
3	2X BUCK	WOOD
4	1/4" MAX. SHIM SPACE	WOOD
5	3/16 x 2-3/4" TAPCON	STEEL
6	#10 x 3-1/3" PAN WOOD SCREW	STEEL
7	3/16" x 2-1/4" TAPCON	STEEL
8	#8 x 3/4" PAN WOOD SCREW	STEEL
9	DOOR SKIN (MIN. 0.075" THICK)	FIBERGLASS
10	INSWING VINYL DOOR BOTTOM SWEEP BY ENDURA	VINYL
10A	VINYL DOOR BOTTOM SWEEP #1828, BY HELM INC.	VINYL
11	REINFORCEMENT WOOD FOR LOCKS	WOOD
12	FINISH JAMBED PINE JAMB	WOOD
13	#8 x 2-1/4" PAN HS	STEEL
14	BOTTOM RAIL	FOAM PVC
15	INSWING ADJUSTABLE THRESHOLD BY ENDURA	AL/WOOD
15A	INSWING ADJUSTABLE ALUMINUM THRESHOLD BY DLP	AL/WOOD
16	FORCE 3 WEATHER STRIPPING, BY ENDURA	FOAM
16A	COMPRESSION WEATHER STRIP CLOSED CELL #30 BY SCHLEGEL	FOAM
17	KNOBSET KEYED ENTRY GRADE 2	STEEL
18	KNOBSET DEADBOLT GRADE 2	STEEL
19	NOT USED	-
20	POLYURETHANE FOAM BY MAWTA	FOAM
21	1" x 1" BUTT HINGE	STEEL
22	#8 x 2" PAN WOOD SCREW	STEEL
23	POLY FRICH JAMB	COMP. / VINYL
24	HINGE & LATCH STILE	FOAM PVC
25	TOP RAIL	FOAM PVC
26	NOT USED	-
27	STRIKE PLATE	STEEL
28	OUTSWING BUMP THRESHOLD	ALUM.
29	HINGE & LATCH STILE REINFORCEMENT	LVL
30	1/4" x 3-3/4" TAPCON	STEEL
31	#8 x 1" PAN WOOD SCREW	STEEL

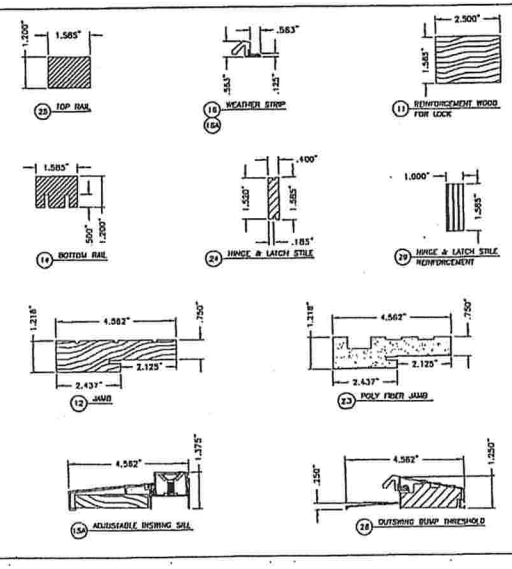

Florida Product Approval #6184.1

REVISIONS :

Maronda Homes
4071 321-0064 4005 MARONDA WAY SANFORD, FLORIDA

FIBERGLASS EXTERIOR DOORS
IN SWING / OUT SWING DOOR
SINGLE DOOR
RELEASE DATE: 09/02/08

SHEET:
ED-0

NOTES:

1. SHORT GLAZED PANEL OPTION – .090" MINIMUM S38 GLAZING IN MOLDED FRAMES SCREWED TOGETHER WITH A MINIMUM OF (8) #8x1" SCREWS INSTALLED IN TOP OR INTERMEDIATE SECTION (WITH OR WITHOUT DECORATIVE INSERTS) MEETS UNIFORM STATIC DESIGN PRESSURES SHOWN ON THIS DRAWING. GLAZING SHALL HAVE A MAXIMUM HEIGHT OF 13.75" AND A MAXIMUM LENGTH OF 16.75". GLAZING IS NOT IMPACT RESISTANT AND DOES NOT MEET THE REQUIREMENTS FOR WIND-BORNE DEBRIS REGIONS.

2. LONG GLAZED PANEL OPTION – .090" MINIMUM S38 GLAZING IN MOLDED FRAMES SCREWED TOGETHER WITH A MINIMUM OF (10) #8x1" SCREWS INSTALLED IN TOP OR INTERMEDIATE SECTION (WITH OR WITHOUT DECORATIVE INSERTS) MEETS UNIFORM STATIC DESIGN PRESSURES SHOWN ON THIS DRAWING. GLAZING SHALL HAVE A MAXIMUM HEIGHT OF 13.75" AND A MAXIMUM LENGTH OF 38". GLAZING IS NOT IMPACT RESISTANT AND DOES NOT MEET THE REQUIREMENTS FOR WIND-BORNE DEBRIS REGIONS.

3. VINYL OR WOOD DOOR STOP NAILED A MAXIMUM OF 6" O.C. MUST OVERLAP TOP AND BOTH ENDS OF PANELS MINIMUM 7/16" TO MEET NEGATIVE PRESSURES.

4. KEY LOCK, SLIDE LOCK, OR OPERATOR REQUIRED.

5. SECTION SHALL BE CONSTRUCTED WITH FOAMED IN PLACE POLYURETHANE FOAM INSULATION CHEMICALLY BONDED TO 20 GA MINIMUM FACER STEEL AND A POLYLAMINATE BACKER, END CAP TO HAVE A MINIMUM 1.1" DEPTH.

6. THE DESIGN OF THE SUPPORTING STRUCTURAL ELEMENTS SHALL BE THE RESPONSIBILITY OF THE PROFESSIONAL OF RECORD FOR THE BUILDING OR STRUCTURE AND IN ACCORDANCE WITH CURRENT BUILDING CODES FOR THE LOADS LISTED ON THIS DRAWING.

7. DOOR JAMB TO BE MINIMUM 2x8 STRUCTURAL GRADE LUMBER. REFER TO JAMB CONNECTION SUPPLEMENT FOR ATTACHMENT TO SUPPORTING STRUCTURE.

8. LOUVER OPTION – .050" MINIMUM ALUMINUM LOUVERS IN MOLDED FRAMES SCREWED TOGETHER WITH A MINIMUM OF (6) #8x1" SCREWS INSTALLED IN THE END PANELS OF THE BOTTOM SECTION. LOUVERS ARE NOT IMPACT RESISTANT AND DO NOT MEET THE REQUIREMENTS FOR WIND-BORNE DEBRIS REGIONS.

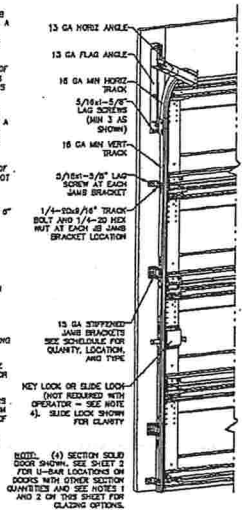

NOTE: (4) SECTION SOLID DOOR SHOWN. SEE SHEET 2 FOR U-BAR LOCATIONS ON DOORS WITH OTHER SECTION QUANTITIES AND SEE NOTES 1 AND 2 ON THIS SHEET FOR GLAZING OPTIONS.

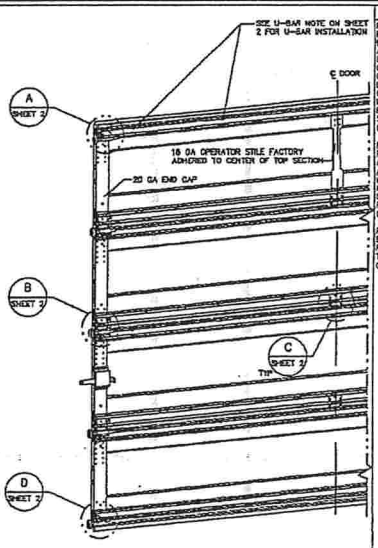

REVISIONS

P3 CHANGES TO GENERAL FORMAT AND CHANGED U-BAR FASTENER TYPE AT END CAPS AND BOTTOM RETAINER. CHANGED CENTER HINGE GAUGE AND ADDED LOUVER OPTION. CHANGED STRUT IDENTIFICATION METHOD FROM COLORED PAINT TO STAMPED NUMBER. GRT 3/07/06

P4 ADDED IMPACT RESISTANCE TO DOOR. ADDED JB JAMB BRACKET AT 2" LOCATION. ADDED MODEL #100. MODIFIED NOTE 8 TO STATE THAT LOUVERS ARE NOT IMPACT RESISTANT. GRT 8/8/07

P5 MODIFIED JAMB BRACKET SCHEDULE FOR FAT OPTION. ADDED LHR TRACK DETAIL SHEET 2. GRT 4/17/08

SUPERIMPOSED DESIGN PRESSURE LOADS ON SUPPORTING STRUCTURE

MAX DOOR WIDTH	DOOR HEIGHT	UNIFORM LOAD EACH JAMB (PLF)
8'-0"	ALL	+107.5/-123.2
9'-0"	ALL	+121.1/-138.6

JAMB BRACKET SCHEDULE

DOOR HEIGHT	NO. OF SECTIONS	NO. OF JAMB BRACKETS (EACH JAMB)	TRACK TYPE	LOCATION OF CENTERLINE OF JAMB BRACKETS MEASURED FROM BOTTOM OF TRACK (ALL DIMENSIONS ± 1")
7'-0"	4	4	GI	2" (JB), 13" (GI), 40-1/8" (GI), 63" (JB)
7'-0"	4	4	FAT	2" (JB), 10" (JB), 42" (JB), 63-1/8" (JB)
8'-0"	3	3	GI	2" (JB), 13" (GI), 34" (JB), 47-1/8" (GI), 67" (GI)
8'-0"	3	3	FAT	2" (JB), 10" (JB), 29-3/4" (JB), 48" (JB), 66" (JB)

NOTE:
(JB) FOLLOWING DIMENSION DENOTES SLOTTED JAMB BRACKET ATTACHED TO TRACK WITH 1/4-20x9/16" TRACK BOLT AND NUT.
(GI) FOLLOWING DIMENSION DENOTES CLICK INSTALL JAMB BRACKET INSTALLED IN BUTTERFLY SLOT. NO ADDITIONAL HARDWARE NEEDED TO ATTACH TO TRACK.

MARK R. BARROW, PE
FLORIDA LICENSE NO. 57389

Wayne Dalton
3365 ADDISON DRIVE
PENSACOLA, FLORIDA 32514
(850) 474-9890

STATIC PRESSURE RATINGS	APPROVED SIZES	SCALE: N.T.S.		SIZE: A
DESIGN (PSF): +26.90/-30.80	MAX WIDTH: 9'-0"		DATE	NAME
TEST (PSF): +40.35/-46.20	MAX HEIGHT: 8'-0"	DRAWN	3/7/06	GRT
IMPACT/CYCLIC RATED (YES/NO): YES	MAX SECTION HEIGHT: 21"	CHECKED	4/8/06	MRB

MODELS 5120/6100/9100 — SHEET 1 OF 2

WINDLOAD SPECIFICATION OPTION CODE 0228 — DRAWING PART NO. 318958 — REV. P5

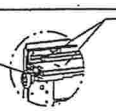

DETAIL A

13 GA ADJUSTABLE TOP FIXTURE ATTACHED TO PRE-PUNCHED HOLES IN BOTTOM OF U-BAR WITH (2) 1/4-14x5/8" GRIMPTITE SCREWS

PLACE U-BAR OVER INTEGRAL RIB WITH THE (8) PRE-PUNCHED HOLES EACH END FACING UPWARD AND ATTACH THRU END CAP AT EACH END WITH (2) 1/4-14x2/8" SELF DRILLING GRIMPTITE SCREWS FOR STANDARD TRACK AND (3) 1/4-14x7/8" SELF DRILLING GRIMPTITE SCREWS FOR LOW HEADROOM TRACK (2 OF WHICH ARE USED TO ATTACHED THE TOP BRACKET AS SHOWN).

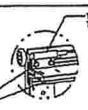

LOW HEADROOM TRACK DETAIL A

13 GA ADJUSTABLE TOP FIXTURE

IMPACT BOTTOM BRACKET

ATTACH BOTTOM BRACKET TO BOTTOM U-BAR WITH (2) 1/4-14x7/8" SELF DRILLING GRIMPTITE SCREWS

DETAIL B

13 GA ROLLER SLIDE ATTACHED TO PRE-PUNCHED HOLES IN TOP OF U-BAR WITH (2) 1/4-14x5/8" GRIMPTITE SCREWS. USE WIDER HOLE IN SLIDE TO ENSURE PROPER ALIGNMENT OF ROLLERS

13 GA HINGE ATTACHED WITH (4) 1/4-14x5/8" GRIMPTITE SCREWS (2 OF WHICH ARE FACTORY ATTACHED)

2" NYLON SILENT GLIDE ROLLER WITH 4" STEM

PLACE U-BAR OVER INTEGRAL RIB WITH THE (8) PRE-PUNCHED HOLES EACH END FACING UPWARD AND ATTACH THRU END CAP AT EACH END WITH (2) 1/4-14x7/8" SELF DRILLING GRIMPTITE SCREWS (EXCEPTION: U-BAR PLACED OVER TOP RIB ON THE BOTTOM SECTION SHALL ONLY BE ATTACHED THRU END CAP AT EACH END WITH (1) 1/4-14x7/8" SELF DRILLING GRIMPTITE SCREW LOCATED ON THE BOTTOM FLANGE OF THE U-BAR NOTE: DUE TO CLEARANCES REQUIRED TO INSTALL SCREWS AT THE ENDS OF THE U-BARS, ALL U-BARS SHALL BE INSTALLED ON SECTIONS PRIOR TO INSTALLING ROLLER SLIDES AND TOP FIXTURE ON THE U-BARS. SEE ATTACHMENT NOTES ON THIS SHEET.

DETAIL C

18 GA HINGE ATTACHED WITH (6) 1/4-20x5/8" GRIMPTITE SCREWS (3 OF WHICH ARE FACTORY ATTACHED, 3 OF WHICH ARE FIELD INSTALLED INTO TOP LEAF, AND 1 OF WHICH IS FIELD INSTALLED THRU PRE-PUNCHED HOLE IN U-BAR)

PLACE U-BAR OVER INTEGRAL RIB AND ATTACH WITH (2) 1/4-20x5/8" GRIMPTITE SCREWS THRU PRE-PUNCHED HOLES AT EACH INTERMEDIATE HINGE LOCATION (1 THRU FLANGE OF U-BAR AND BOTTOM HINGE LEAF AND 1 THRU WEB OF U-BAR AND INTEGRAL RIB OF SECTION)

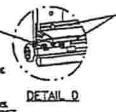

DETAIL D

12 GA BOTTOM BRACKET FACTORY ATTACHED WITH (2) 1/4-14x5/8" GRIMPTITE SCREWS

FOR IMPACT RESISTANCE, BOTTOM BRACKET MUST BE SCREWED TO THE BOTTOM U-BAR WITH (2) 1/4-14x7/8" SELF DRILLING GRIMPTITE SCREWS. SEE IMPACT BOTTOM BRACKET DETAIL THIS SHEET.

PLACE U-BAR OVER INTEGRAL RIB WITH NOTCH DOWN TO CLEAR BOTTOM BRACKET AND ATTACH THRU END CAP AT EACH END WITH (1) 1/4-14x7/8" SELF DRILLING GRIMPTITE SCREW AS SHOWN AND USE (1) 1/4-14x7/8" SELF DRILLING GRIMPTITE SCREW ACROSS THE BOTTOM OF THE BOTTOM U-BAR AT EACH PRE-PUNCHED HOLE AT EVERY HINGE LOCATION. USE (1) 1/4-20x5/8" GRIMPTITE SCREW AT ALL OTHER PRE-PUNCHED HOLE LOCATIONS.

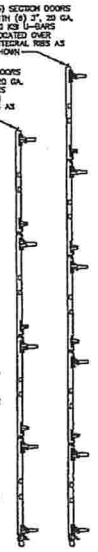

U-BAR ATTACHMENT NOTES:

1. ALL U-BARS SHALL BE PLACED OVER INTEGRAL RIBS AND ATTACHED THRU PRE-PUNCHED HOLES WITH (2) 1/4-14x5/8" GRIMPTITE SCREWS AT EACH INTERMEDIATE HINGE LOCATION, (2) 1/4-14x7/8" SELF DRILLING GRIMPTITE SCREWS AT EACH END CAP (EXCEPT BOTH U-BARS ON BOTTOM SECTION – SEE DETAIL B AND D THIS SHEET), (2) 1/4-14x5/8" GRIMPTITE SCREWS APPROXIMATELY MIDPOINT BETWEEN END OF DOOR AND INTERMEDIATE HINGE LOCATION, AND (1) 1/4-14x5/8" GRIMPTITE SCREW APPROXIMATELY 8" FROM EACH END. THERE SHALL BE A TOTAL OF (12) SCREWS ATTACHING EACH U-BAR EXCEPT BOTH U-BARS ON BOTTOM SECTION SHALL HAVE A TOTAL OF (10) SCREWS EACH.

2. WITH THE EXCEPTION OF THE (8) PRE-PUNCHED HOLES IN THE TOP OF EACH END USED FOR ATTACHMENT OF THE ROLLER SLIDES AND THE (8) PRE-PUNCHED HOLES IN THE BOTTOM OF EACH END USED FOR THE ATTACHMENT OF THE TOP FIXTURE AND UNLESS NOTED OTHERWISE ON THIS SPECIFICATION DRAWING, ALL PRE-PUNCHED HOLES IN ALL U-BARS SHALL BE ATTACHED TO THE DOOR WITH 1/4-14x5/8" GRIMPTITE SCREWS.

3. 20 GA U-BARS SHALL BE STAMPED "24" APPROXIMATELY 8" FROM EACH END.

REVISIONS

P3 CHANGES TO GENERAL FORMAT AND CHANGED U-BAR FASTENER TYPE AT END CAPS AND BOTTOM RETAINER. CHANGED CENTER HINGE GAUGE AND ADDED LOUVER OPTION. CHANGED STRUT IDENTIFICATION METHOD FROM COLORED PAINT TO STAMPED NUMBER. GRT 3/07/06

P4 ADDED IMPACT RESISTANCE TO DOOR. ADDED JB JAMB BRACKET AT 2" LOCATION. ADDED MODEL #100. MODIFIED NOTE 8 TO STATE THAT LOUVERS ARE NOT IMPACT RESISTANT. GRT 8/8/07

P5 MODIFIED JAMB BRACKET SCHEDULE FOR FAT OPTION. ADDED LHR TRACK DETAIL SHEET 2. GRT 4/17/08

MARK R. BARROW, PE
FLORIDA LICENSE NO. 57389

Wayne Dalton
3365 ADDISON DRIVE
PENSACOLA, FLORIDA 32514
(850) 474-9890

STATIC PRESSURE RATINGS	APPROVED SIZES	SCALE: N.T.S.		SIZE: A
DESIGN (PSF): +26.90/-30.80	MAX WIDTH: 9'-0"		DATE	NAME
TEST (PSF): +40.35/-46.20	MAX HEIGHT: 8'-0"	DRAWN	3/7/06	GRT
IMPACT/CYCLIC RATED (YES/NO): YES	MAX SECTION HEIGHT: 21"	CHECKED	4/8/06	MRB

MODELS 5120/6100/9100 — SHEET 2 OF 2

WINDLOAD SPECIFICATION OPTION CODE 0228 — DRAWING PART NO. 318958 — REV. P5

Florida Product Approval # FL9174.1

SHEET: GD1

GARAGE DOORS

8' - 9' Wide Wind Zone 125-130

RELEASE DATE:

Maronda Homes

(407) 321-0064 4005 MARONDA WAY SANFORD, FLORIDA

REVISIONS :

1-18-08 Revise Garage Door Supplier

2-19-09 Update to Code.

NOTES:

1. SHORT GLAZED PANEL OPTION – .090" MINIMUM SSB GLAZING IN MOLDED FRAMES GLUED WITH A 1/8" BEAD OF DOWSIL 1199 OR EQUIVALENT UNDER THE OUTER FRAME AND SCREWED TOGETHER WITH A MINIMUM OF (8) #8x1" SCREWS INSTALLED IN TOP OR INTERMEDIATE SECTION (WITH OR WITHOUT DECORATIVE INSERTS) MEETS UNIFORM STATIC DESIGN PRESSURES SHOWN ON THIS DRAWING. GLAZING SHALL HAVE A MAXIMUM HEIGHT OF 13.75" AND A MAXIMUM LENGTH OF 18.75". GLAZING IS NOT IMPACT RESISTANT AND DOES NOT MEET THE REQUIREMENTS FOR WIND-BORNE DEBRIS REGIONS. GLAZED SECTION REQUIRES OPERATOR STILE TO BE FACTORY INSTALLED.

2. LONG GLAZED PANEL OPTION – NOT AVAILABLE WITH THIS OPTION CODE.

3. VINYL OR WOOD DOOR STOP NAILED A MAXIMUM OF 6" O.C. MUST OVERLAP TOP AND BOTH ENDS OF PANELS MINIMUM 7/16" TO MEET NEGATIVE PRESSURES.

4. KEY LOCK, SLIDE LOCK, OR OPERATOR REQUIRED.

5. SECTION SHALL BE CONSTRUCTED WITH FOAMED IN PLACE POLYURETHANE FOAM INSULATION CHEMICALLY BONDED TO 30 GA. MINIMUM FACER STEEL AND A POLYURETHANE BACKER. END CAP TO HAVE A MINIMUM 1.1" DEPTH.

6. THE DESIGN OF THE SUPPORTING STRUCTURAL ELEMENTS SHALL BE THE RESPONSIBILITY OF THE PROFESSIONAL OF RECORD FOR THE BUILDING OR STRUCTURE AND IN ACCORDANCE WITH CURRENT BUILDING CODES FOR THE LOADS LISTED ON THIS DRAWING.

7. DOOR JAMB TO BE MINIMUM 2x6 STRUCTURAL GRADE LUMBER. REFER TO JAMB CONNECTION SUPPLEMENT FOR ATTACHMENT TO SUPPORTING STRUCTURE.

8. LOUVER OPTION – .080" MINIMUM ALUMINUM LOUVERS IN MOLDED FRAMES SCREWED TOGETHER WITH A MINIMUM OF (8) #8x1" SCREWS INSTALLED IN THE END PANELS OF THE BOTTOM SECTION. LOUVERS ARE NOT IMPACT RESISTANT AND DO NOT MEET THE REQUIREMENTS FOR WIND-BORNE DEBRIS REGIONS.

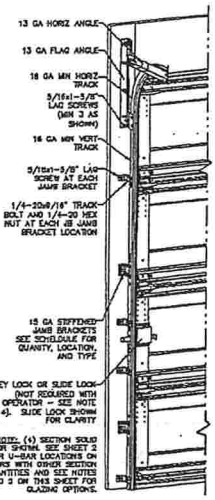

NOTE: (4) SECTION SOLID DOOR SHOWN. SEE SHEET 2 FOR U-BAR LOCATIONS ON DOORS WITH OTHER SECTION QUANTITIES AND SEE NOTES 1 AND 2 ON THIS SHEET FOR GLAZING OPTIONS.

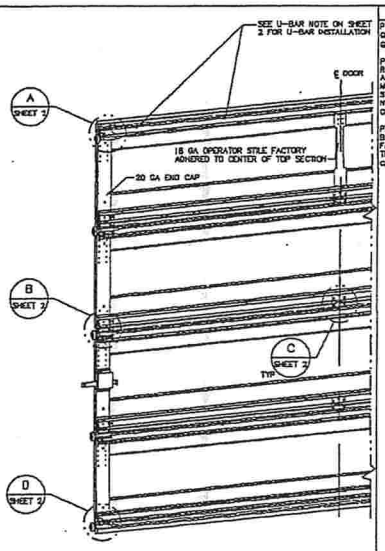

REVISIONS

P1 ADDED SHORT PANEL GLAZING OPTION (NOTE 1) GRT 6/30/06

P2 ADDED IMPACT RESISTANCE TO DOOR. ADDED MODEL 6100. MODIFIED NOTE 8 TO STATE THAT LOUVERS ARE NOT IMPACT RESISTANT. GRT 5/8/07

P3 MODIFIED JAMB BRACKET SCHEDULE FOR FAT OPTION. ADDED LHR TRACK DETAIL SHEET 2. GRT 4/17/08

SUPERIMPOSED DESIGN PRESSURE LOADS ON SUPPORTING STRUCTURE

MAX DOOR WIDTH	DOOR HEIGHT	UNIFORM LOAD EACH JAMB (PLF)
8'-0"	ALL	+172.2/-193.4
9'-0"	ALL	+184.4/-223.2

JAMB BRACKET SCHEDULE

DOOR HEIGHT	NO. OF SECTIONS	NO. OF JAMB BRACKETS (EACH JAMB)	TRACK TYPE	LOCATION OF CENTERLINE OF JAMB BRACKETS MEASURED FROM BOTTOM OF TRACK (ALL DIMENSIONS ± 2")
7'-0"	4	5	CI	2" (JB), 13" (D), 23-1/2" (JB), 34" (JB), 45-1/2" (D), 63" (JB)
7'-0"	4	5	FAT	2" (JB), 10" (JB), 21-3/4" (JB), 29-3/4" (JB), 42" (JB), 63-1/2" (JB)
8'-0"	5	6	CI	2" (JB), 13" (D), 23" (JB), 34" (JB), 47-1/2" (D), 58" (JB), 67" (D), 73" (JB)
8'-0"	5	6	FAT	2" (JB), 10" (JB), 21-3/4" (JB), 29-3/4" (JB), 48" (JB), 57-1/4" (JB), 66" (JB), 73-1/2" (JB)

NOTE:
(JB) FOLLOWING DIMENSION DENOTES SLOTTED JAMB BRACKET ATTACHED TO TRACK WITH 1/4-20x9/16" TRACK BOLT AND NUT.
(D) FOLLOWING DIMENSION DENOTES QUICK INSTALL JAMB BRACKET INSTALLED IN BUTTERFLY SLOT. NO ADDITIONAL HARDWARE NEEDED TO ATTACH TO TRACK.

MARK R. BARROW, PE
FLORIDA LICENSE NO. 57389

Wayne' Dalton
3395 ADDISON DRIVE
PENSACOLA, FLORIDA 32514
(850) 474-9890

STATIC PRESSURE RATINGS		APPROVED SIZES		SCALE: N.T.S.		SIZE: A
DESIGN (PSF):	+43.20/-49.60	MAX WIDTH:	9'-0"		DATE	NAME
TEST (PSF):	+64.80/-74.40	MAX HEIGHT:	8'-0"	DRAWN	2/22/06	GRT
IMPACT/CYCLIC RATED (YES/NO):	YES	MAX SECTION HEIGHT:	21"	CHECKED	4/6/08	MRB

MODELS 5120/6100/9100 — SHEET 1 OF 2

WINDLOAD SPECIFICATION OPTION CODE 0234 — DRAWING PART NO. 319022 — REV. P3

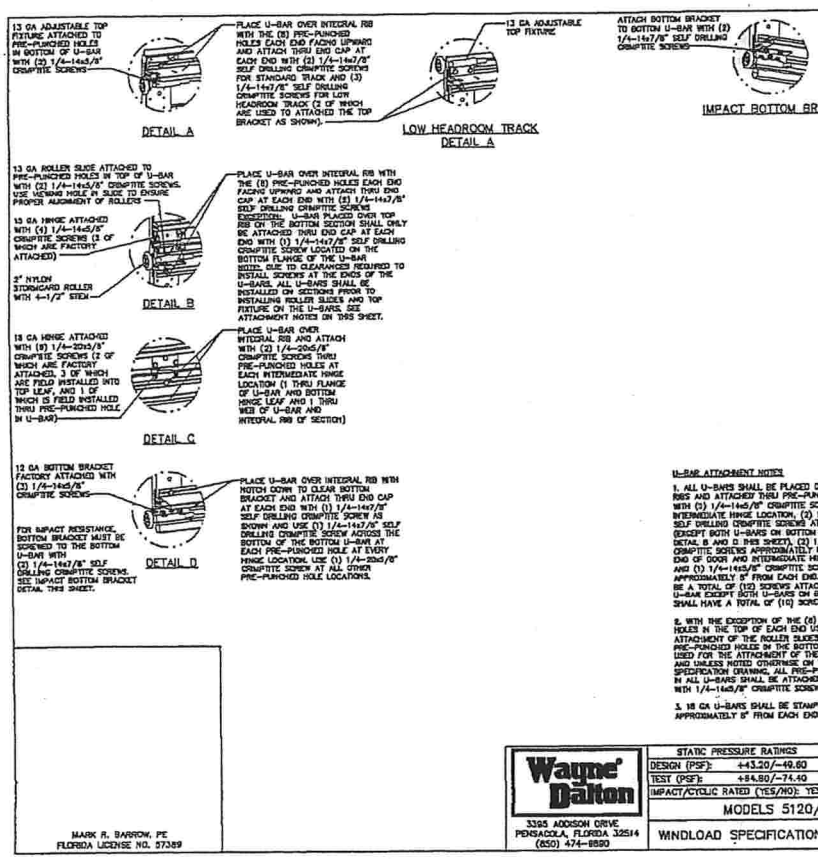

U-BAR ATTACHMENT NOTES

1. ALL U-BARS SHALL BE PLACED OVER INTEGRAL RIBS AND ATTACHED THRU PRE-PUNCHED HOLES WITH (3) 1/4-14x5/8" CRIMPTITE SCREWS AT EACH INTERMEDIATE HINGE LOCATION, (2) 1/4-14x7/8" SELF DRILLING CRIMPTITE SCREWS AT EACH END CAP (EXCEPT BOTH U-BARS ON BOTTOM SECTION – SEE DETAIL B AND D THIS SHEET), (2) 1/4-14x5/8" CRIMPTITE SCREWS APPROXIMATELY MIDWAY BETWEEN END OF DOOR AND INTERMEDIATE HINGE LOCATION, AND (1) 1/4-14x5/8" CRIMPTITE SCREW APPROXIMATELY 5" FROM EACH END. THERE SHALL BE A TOTAL OF (12) SCREWS ATTACHED EACH U-BAR EXCEPT BOTH U-BARS ON BOTTOM SECTION SHALL HAVE A TOTAL OF (10) SCREWS EACH.

2. WITH THE EXCEPTION OF THE (8) PRE-PUNCHED HOLES IN THE TOP OF EACH END USED FOR ATTACHMENT OF THE ROLLER SLIDES AND THE (8) PRE-PUNCHED HOLES IN THE BOTTOM OF EACH END USED FOR THE ATTACHMENT OF THE TOP FIXTURE AND UNLESS NOTED OTHERWISE ON THIS SPECIFICATION DRAWING, ALL PRE-PUNCHED HOLES IN ALL U-BARS SHALL BE ATTACHED TO THE DOOR WITH 1/4-14x5/8" CRIMPTITE SCREWS.

3. 18 GA U-BARS SHALL BE STAMPED "48" APPROXIMATELY 5" FROM EACH END.

REVISIONS

P1 ADDED SHORT PANEL GLAZING OPTION (NOTE 1) GRT 6/30/06

P2 ADDED IMPACT RESISTANCE TO DOOR. ADDED MODEL 6100. MODIFIED NOTE 8 TO STATE THAT LOUVERS ARE NOT IMPACT RESISTANT. GRT 5/8/07

P3 MODIFIED JAMB BRACKET SCHEDULE FOR FAT OPTION. ADDED LHR TRACK DETAIL SHEET 2. GRT 4/17/08

MARK R. BARROW, PE
FLORIDA LICENSE NO. 57389

Wayne' Dalton
3395 ADDISON DRIVE
PENSACOLA, FLORIDA 32514
(850) 474-9890

STATIC PRESSURE RATINGS		APPROVED SIZES		SCALE: N.T.S.		SIZE: A
DESIGN (PSF):	+43.20/-49.60	MAX WIDTH:	9'-0"		DATE	NAME
TEST (PSF):	+64.80/-74.40	MAX HEIGHT:	8'-0"	DRAWN	2/22/06	GRT
IMPACT/CYCLIC RATED (YES/NO):	YES	MAX SECTION HEIGHT:	21"	CHECKED	4/6/08	MRB

MODELS 5120/6100/9100 — SHEET 2 OF 2

WINDLOAD SPECIFICATION OPTION CODE 0234 — DRAWING PART NO. 319022 — REV. P3

Florida Product Approval # FL9174.5

SHEET: GD1

GARAGE DOORS

8' - 9' Wide — Wind Zone 140

RELEASE DATE:

Maronda Homes
(407) 321-0064 4005 MARONDA WAY SANFORD, FLORIDA

REVISIONS :
1-18-08 Revise Garage Door Supplier
2-19-09 Update to Code.

NOTES:

1. SHORT GLAZED PANEL OPTION - .020" MINIMUM 3003 GLAZING IN MOLDED FRAMES SCREWED TOGETHER WITH A MINIMUM OF (8) #8x1" SCREWS INSTALLED IN TOP OR INTERMEDIATE SECTION (WITH OR WITHOUT DECORATIVE INSERTS) MEETS UNIFORM STATIC DESIGN PRESSURES SHOWN ON THIS DRAWING. GLAZING SHALL HAVE A MAXIMUM HEIGHT OF 13.75" AND A MAXIMUM LENGTH OF 16.75". GLAZING IS NOT IMPACT RESISTANT AND DOES NOT MEET THE REQUIREMENTS FOR WIND-BORNE DEBRIS REGIONS.

2. LONG GLAZED PANEL OPTION - NOT AVAILABLE WITH THIS OPTION CODE.

3. VINYL OR WOOD DOOR STOP NAILED A MAXIMUM OF 6" O.C. MUST OVERLAP TOP AND BOTH ENDS OF PANELS MINIMUM 7/16" TO MEET NEGATIVE PRESSURE.

4. KEY LOCK, SLIDE LOCKS, OR OPERATOR REQUIRED.

5. SECTION SHALL BE CONSTRUCTED WITH FOAMED IN PLACE POLYURETHANE FOAM INSULATION CHEMICALLY BONDED TO 20 GA MINIMUM FACER STEEL AND A POLYLAMINATE BACKER. END CAP TO HAVE A MINIMUM 1.3" DEPTH.

6. THE DESIGN OF THE SUPPORTING STRUCTURAL ELEMENTS SHALL BE THE RESPONSIBILITY OF THE PROFESSIONAL OF RECORD FOR THE BUILDING OR STRUCTURE AND IN ACCORDANCE WITH CURRENT BUILDING CODES FOR THE LOADS LISTED ON THIS DRAWING.

7. DOOR JAMB TO BE MINIMUM 2nd STRUCTURAL GRADE LUMBER. REFER TO JAMB CONNECTION SUPPLEMENT FOR ATTACHMENT TO SUPPORTING STRUCTURE.

8. LOUVER OPTION - .020" MINIMUM ALUMINUM LOUVERS IN MOLDED FRAMES SCREWED TOGETHER WITH A MINIMUM OF (8) #8x1" SCREWS INSTALLED IN THE END PANELS OF THE BOTTOM SECTION. LOUVERS ARE NOT IMPACT RESISTANT AND DO NOT MEET THE REQUIREMENTS FOR WIND-BORNE DEBRIS REGIONS.

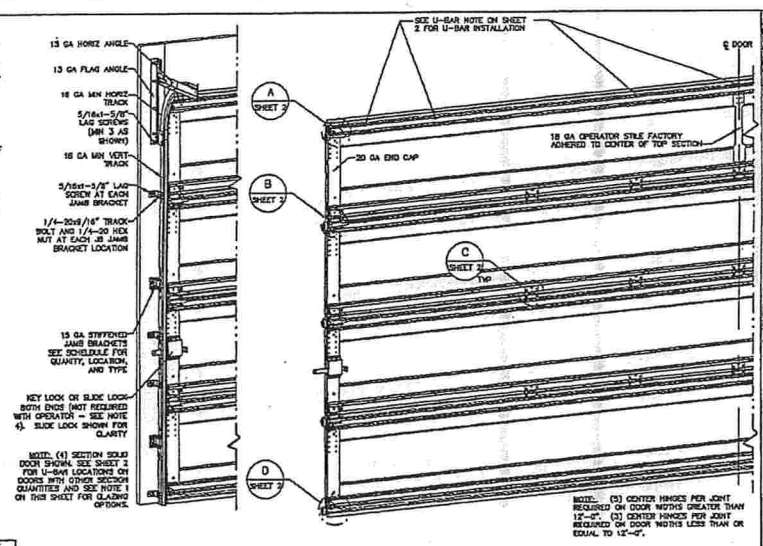

REVISIONS

P4 CHANGES TO GENERAL FORMAT AND CHANGED U-BAR FASTENER TYPE AT END CAPS AND BOTTOM RETAINER. CHANGED CENTER HINGE GAUGE AND ADDED LOUVER OPTION. CHANGED STRUT IDENTIFICATION METHOD FROM COLORED PAINT TO STAMPED NUMBER. GRT 3/8/06

P5 ADDED SUPERIMPOSED DESIGN PRESSURE LOADS ON SUPPORTING STRUCTURE AND CLARIFIED NUMBER OF FASTENERS AND CENTER HINGES REQUIRED FOR NARROWER DOOR WIDTHS. MRB 5/10/06

P6 ADDED IMPACT RESISTANCE TO DOOR. ADDED MODEL 6100. MODIFIED NOTE 8 TO STATE THAT LOUVERS ARE NOT IMPACT RESISTANT. GRT 8/8/07

P7 MODIFIED JAMB BRACKET SCHEDULE FOR FAT OPTION. ADDED LHR TRACK DETAIL SHEET 2. GRT 4/17/08

SUPERIMPOSED DESIGN PRESSURE LOADS ON SUPPORTING STRUCTURE

MAX DOOR WIDTH	DOOR HEIGHT	UNIFORM LOAD EACH JAMB (PLF)
18'-0"	ALL	+207.3/-230.4
16'-0"	ALL	+181.3/-205.5
12'-0"	ALL	+155.4/-172.8
10'-0"	ALL	+129.3/-144.0

JAMB BRACKET SCHEDULE

DOOR HEIGHT	NO. OF SECTIONS	NO. OF JAMB BRACKETS (EACH JAMB)	TRACK TYPE	LOCATION OF CENTERLINE OF JAMB BRACKETS MEASURED FROM BOTTOM OF TRACK (ALL DIMENSIONS ± 2")
7'-0"	4	6	GI	2" (JB), 13" (G), 25-1/2" (JB), 34" (JB), 45-1/4" (G), 53" (JB)
7'-0"	4	6	FAT	2" (JB), 10" (JB), 21-3/4" (JB), 29-3/4" (JB), 42" (JB), 53-1/4" (JB)
8'-0"	5	6	GI	2" (JB), 13" (G), 23" (JB), 34" (JB), 47-1/4" (G), 58" (JB), 67" (G), 73" (JB)
8'-0"	5	6	FAT	2" (JB), 10" (JB), 21-3/4" (JB), 29-3/4" (JB), 46" (JB), 57-1/4" (JB), 66" (JB), 73-1/2" (JB)

NOTE:
(G) FOLLOWING DIMENSION DENOTES SLOTTED JAMB BRACKET ATTACHED TO TRACK WITH 1/4-20x8/16" TRACK BOLT AND NUT.
(G) FOLLOWING DIMENSION DENOTES QUICK INSTALL JAMB BRACKET INSTALLED IN BUTTERFLY SLOT. NO ADDITIONAL HARDWARE NEEDED TO ATTACH TO TRACK.

MARK R. BARROW, PE
FLORIDA LICENSE NO. 57369

Wayne Dalton
3395 ADDISON DRIVE
PENSACOLA, FLORIDA 32514
(850) 474-9960

STATIC PRESSURE RATINGS	APPROVED SIZES	SCALE: N.T.S.	SIZE: A
DESIGN (PSF): +25.90/-28.80	MAX WIDTH: 18'-0"	DATE	NAME
TEST (PSF): +38.85/-43.20	MAX HEIGHT: 8'-0"	DRAWN 3/8/06	GRT
IMPACT/CYCLIC RATED (YES/NO): YES	MAX SECTION HEIGHT: 21"	CHECKED 4/6/06	MRB

MODELS 5120/6100/9100 — SHEET 1 OF 2

WINDLOAD SPECIFICATION OPTION CODE 0230 — DRAWING PART NO. 318960 — REV. P7

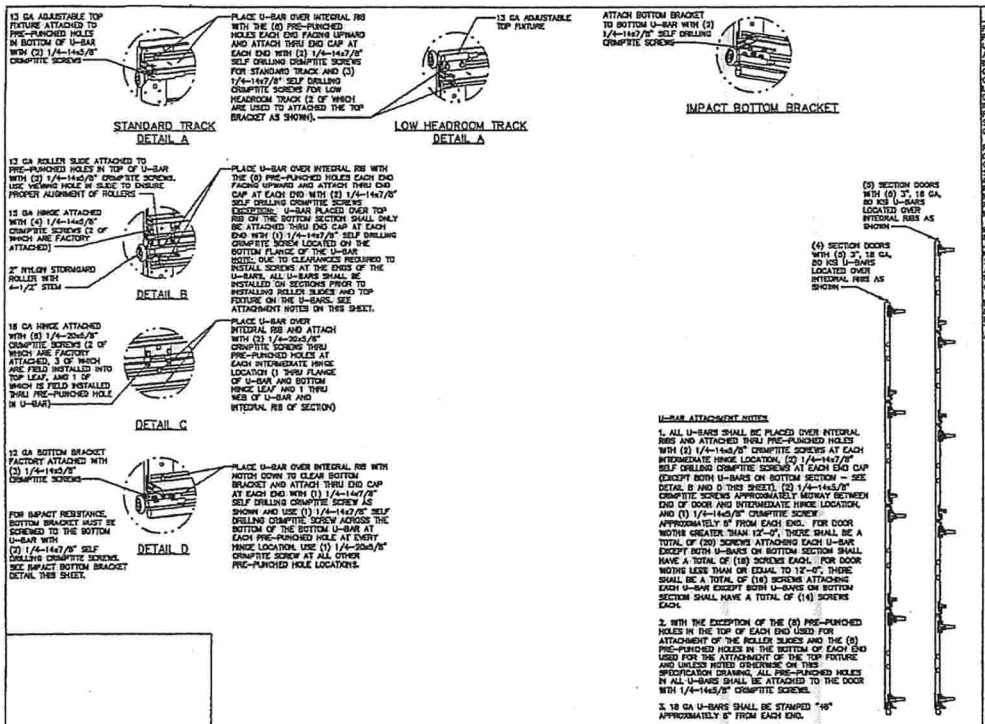

U-BAR ATTACHMENT NOTES

1. ALL U-BARS SHALL BE PLACED OVER INTERNAL RIBS AND ATTACHED THRU PRE-PUNCHED HOLES WITH (2) 1/4-14x5/8" CRIMPTITE SCREWS AT EACH INTERMEDIATE HINGE LOCATION, (2) 1/4-14x7/8" SELF DRILLING CRIMPTITE SCREWS AT EACH END CAP (EXCEPT BOTH U-BARS ON BOTTOM SECTION - SEE DETAIL B AND D THIS SHEET), (2) 1/4-14x5/8" CRIMPTITE SCREWS APPROXIMATELY MIDWAY BETWEEN END OF DOOR AND INTERMEDIATE HINGE LOCATION, AND (1) 1/4-14x5/8" CRIMPTITE SCREW APPROXIMATELY 6" FROM EACH END. FOR DOOR WIDTHS GREATER THAN 12'-0", THERE SHALL BE A TOTAL OF (20) SCREWS ATTACHING EACH U-BAR EXCEPT BOTH U-BARS ON BOTTOM SECTION SHALL HAVE A TOTAL OF (18) SCREWS EACH. FOR DOOR WIDTHS LESS THAN OR EQUAL TO 12'-0", THERE SHALL BE A TOTAL OF (16) SCREWS ATTACHING EACH U-BAR EXCEPT BOTH U-BARS ON BOTTOM SECTION SHALL HAVE A TOTAL OF (14) SCREWS EACH.

2. WITH THE EXCEPTION OF THE (8) PRE-PUNCHED HOLES IN THE TOP OF EACH END USED FOR ATTACHMENT OF THE ROLLER SLIDES AND THE (8) PRE-PUNCHED HOLES IN THE BOTTOM OF EACH END USED FOR THE ATTACHMENT OF THE TOP FIXTURE AND UNLESS NOTED OTHERWISE ON THIS SPECIFICATION DRAWING, ALL PRE-PUNCHED HOLES IN ALL U-BARS SHALL BE ATTACHED TO THE DOOR WITH 1/4-14x5/8" CRIMPTITE SCREWS.

3. 18 GA U-BARS SHALL BE STAMPED "18" APPROXIMATELY 5" FROM EACH END.

REVISIONS

P4 CHANGES TO GENERAL FORMAT AND CHANGED U-BAR FASTENER TYPE AT END CAPS AND BOTTOM RETAINER. CHANGED CENTER HINGE GAUGE AND ADDED LOUVER OPTION. CHANGED STRUT IDENTIFICATION METHOD FROM COLORED PAINT TO STAMPED NUMBER. GRT 3/8/06

P5 ADDED SUPERIMPOSED DESIGN PRESSURE LOADS ON SUPPORTING STRUCTURE AND CLARIFIED NUMBER OF FASTENERS AND CENTER HINGES REQUIRED FOR NARROWER DOOR WIDTHS. MRB 5/10/06

P6 ADDED IMPACT RESISTANCE TO DOOR. ADDED MODEL 6100. MODIFIED NOTE 8 TO STATE THAT LOUVERS ARE NOT IMPACT RESISTANT. GRT 8/8/07

P7 MODIFIED JAMB BRACKET SCHEDULE FOR FAT OPTION. ADDED LHR TRACK DETAIL SHEET 2. GRT 4/17/08

MARK R. BARROW, PE
FLORIDA LICENSE NO. 57369

Wayne Dalton
3395 ADDISON DRIVE
PENSACOLA, FLORIDA 32514
(850) 474-9960

STATIC PRESSURE RATINGS	APPROVED SIZES	SCALE: N.T.S.	SIZE: A
DESIGN (PSF): +25.90/-28.80	MAX WIDTH: 18'-0"	DATE	NAME
TEST (PSF): +38.85/-43.20	MAX HEIGHT: 8'-0"	DRAWN 3/8/06	GRT
IMPACT/CYCLIC RATED (YES/NO): YES	MAX SECTION HEIGHT: 21"	CHECKED 4/6/06	MRB

MODELS 5120/6100/9100 — SHEET 2 OF 2

WINDLOAD SPECIFICATION OPTION CODE 0230 — DRAWING PART NO. 318960 — REV. P7

Florida Product Approval # FL9174.3

SHEET: GD2

GARAGE DOORS

10'-16' Wide Wind Zone 125-130

RELEASE DATE:

Maronda Homes

(407) 321-0064 4005 MARONDA WAY SANFORD, FLORIDA

REVISIONS :

1-18-08 Revise Garage Door Supplier

2-19-09 Update to Code.

NOTES:

1. SHORT GLAZED PANEL OPTION – .090" MINIMUM 5356 GLAZING IN MOLDED FRAMES GLUED WITH A 1/8" BEAD OF BOSTIK 1100 OR EQUIVALENT UNDER THE OUTER FRAME AND SCREWED TOGETHER WITH A MINIMUM OF (8) #8x1" SCREWS INSTALLED IN TOP OR INTERMEDIATE SECTION (WITH OR WITHOUT DECORATIVE INSERTS) MEETS UNIFORM STATIC DESIGN PRESSURES SHOWN ON THIS DRAWING. GLAZING SHALL HAVE A MAXIMUM HEIGHT OF 13.75" AND A MAXIMUM LENGTH OF 16.75". GLAZING IS NOT IMPACT RESISTANT AND DOES NOT MEET THE REQUIREMENTS FOR WIND-BORNE DEBRIS REGIONS. GLAZED SECTION REQUIRES J-STRUT SCREWED TO LOWER INTEGRAL RIB OF SECTION AND OPERATOR STILE TO BE FACTORY INSTALLED. INSTALLER SHALL FIELD INSTALL (1) 1/4-14x7/8" SELF DRILLING CRIMPTITE SCREW TO ATTACH THE J-STRUT TO THE INTEGRAL RIB AT THE CENTERLINE OF THE DOOR FOR DETAIL F ON SHEET 2.

2. LONG GLAZED PANEL OPTION – NOT AVAILABLE WITH THIS OPTION CODE.

3. VINYL OR WOOD DOOR STOP NAILED A MAXIMUM OF 6" O.C. MUST OVERLAP TOP AND BOTH ENDS OF PANELS MINIMUM 7/16" TO MEET NEGATIVE PRESSURES.

4. KEY LOCK OR SLIDE LOCKS REQUIRED.

5. SECTION SHALL BE CONSTRUCTED WITH FOAMED IN PLACE POLYURETHANE FOAM INSULATION CHEMICALLY BONDED TO 20 GA MINIMUM FACER STEEL AND A POLYCARBONATE BACKER. END CAP TO HAVE A MINIMUM 1.1" DEPTH.

6. THE DESIGN OF THE SUPPORTING STRUCTURAL ELEMENTS SHALL BE THE RESPONSIBILITY OF THE PROFESSIONAL OF RECORD FOR THE BUILDING OR STRUCTURE AND IN ACCORDANCE WITH CURRENT BUILDING CODES FOR THE LOADS LISTED ON THIS DRAWING.

7. DOOR JAMB TO BE MINIMUM 2x6 STRUCTURAL GRADE LUMBER. REFER TO JAMB CONNECTION SUPPLEMENT FOR ATTACHMENT TO SUPPORTING STRUCTURE.

8. CONCRETE FLOOR SHALL BE 3-1/2" THICK AND 2500 PSI MINIMUM.

9. LOUVER OPTION – .080" MINIMUM ALUMINUM LOUVERS IN MOLDED FRAMES SCREWED TOGETHER WITH A MINIMUM OF (8) #8x1" SCREWS INSTALLED IN THE END PANELS OF THE BOTTOM SECTION. LOUVERS ARE NOT IMPACT RESISTANT AND DO NOT MEET THE REQUIREMENTS FOR WIND-BORNE DEBRIS REGIONS.

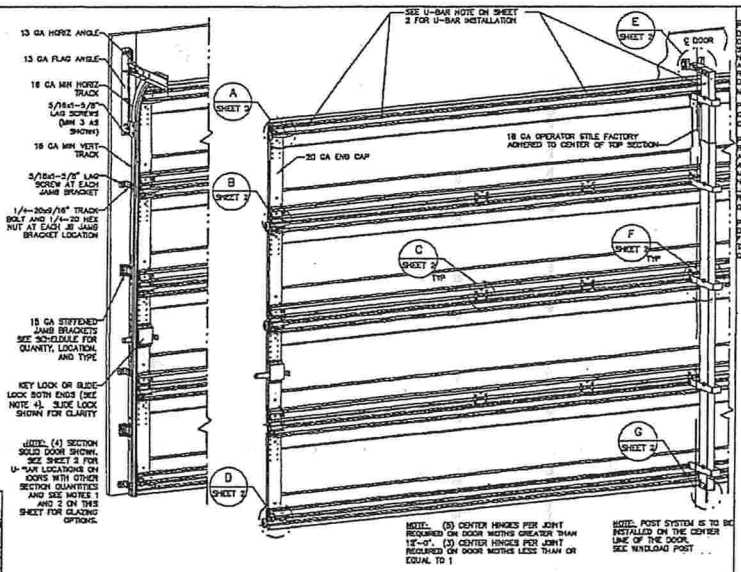

REVISIONS

P1 ADDED SUPERIMPOSED DESIGN PRESSURE LOADS ON SUPPORTING STRUCTURE AND CLARIFIED NUMBER OF FASTENERS AND CENTER HINGES REQUIRED FOR NARROWER DOOR WIDTHS. MRB 5/10/06

P2 ADDED SHORT PANEL GLAZING OPTION (NOTE 1) GRT 6/20/06

P3 ADDED IMPACT RESISTANCE TO DOOR. ADDED JB JAMB BRACKET AT 3" LOCATION. ADDED MODEL 6100. MODIFIED NOTE 8 TO STATE THAT LOUVERS ARE NOT IMPACT RESISTANT. GRT 6/6/07

P4 MODIFIED JAMB BRACKET SCHEDULE FOR FAT OPTION. ADDED LHR TRACK DETAIL SHEET 2. GRT 4/17/08

SUPERIMPOSED DESIGN PRESSURE LOADS ON SUPPORTING STRUCTURE

MAX DOOR WIDTH	MAX DOOR HEIGHT	UNIFORM LOAD EACH JAMB (PLF)	POINT LOAD AT HEADER AND SLAB AT EACH POST LOCATION (LBS)
16'-0"	7'-0"	+167.0/-208.0	+1437.3/-1802.3
	8'-0"	+167.0/-208.0	+1633.3/-1820.6
14'-0"	7'-0"	+157.0/-208.0	+1257.7/-1403.1
	8'-0"	+157.0/-208.0	+1432.0/-1583.2
12'-0"	7'-0"	+157.0/-208.0	+1075.0/-1201.7
	8'-0"	+157.0/-208.0	+1225.5/-1383.6
10'-0"	7'-0"	+157.0/-208.0	+895.3/-1001.3
	8'-0"	+157.0/-208.0	+1020.8/-1138.0

JAMB BRACKET SCHEDULE

DOOR HEIGHT	NO. OF SECTIONS	NO. OF JAMB BRACKETS (EACH JAMB)	TRACK TYPE	LOCATION OF CENTERLINE OF JAMB BRACKETS MEASURED FROM BOTTOM OF TRACK (ALL DIMENSIONS ± 2")
7'-0"	4	5	GI	2" (JB), 13" (G1), 25-1/2" (JB), 45-1/6" (G1), 63" (JB)
7'-0"	4	5	FAT	2" (JB), 10" (JB), 22-3/4" (JB), 43" (JB), 63-1/4" (JB)
8'-0"	5	6	GI	2" (JB), 13" (G1), 23" (JB), 34" (JB), 47-1/4" (G1), 67" (G1)
8'-0"	5	6	FAT	2" (JB), 10" (JB), 21-3/4" (JB), 32-3/4" (JB), 48" (JB), 66" (JB)

NOTE:
(JB) FOLLOWING DIMENSION DENOTES SLOTTED JAMB BRACKET ATTACHED TO TRACK WITH 1/4-20x9/16" TRACK BOLT AND NUT.
(G1) FOLLOWING DIMENSION DENOTES CLAMP INSTALL JAMB BRACKET INSTALLED IN BUTTERFLY SLOT. NO ADDITIONAL HARDWARE NEEDED TO ATTACH TO TRACK.

MARK R. BARROW, PE
FLORIDA LICENSE NO. 57389

Wayne' Dalton
3395 ADDISON DRIVE
PENSACOLA, FLORIDA 32514
(850) 474-9890

STATIC PRESSURE RATINGS		APPROVED SIZES		SCALE: N.T.S.		SIZE: A
DESIGN (PSF):	+39.20/-43.70	MAX WIDTH:	16'-0"		DATE	NAME
TEST (PSF):	+58.80/-65.55	MAX HEIGHT:	8'-0"	DRAWN	3/3/06	GRT
IMPACT/CYCLIC RATED (YES/NO):	YES	MAX SECTION HEIGHT:	21"	CHECKED	4/5/06	MRB

MODELS 5120/6100/9100 — SHEET 1 OF 2

WINDLOAD SPECIFICATION OPTION CODE 0235 — DRAWING PART NO. 319023 — REV. P4

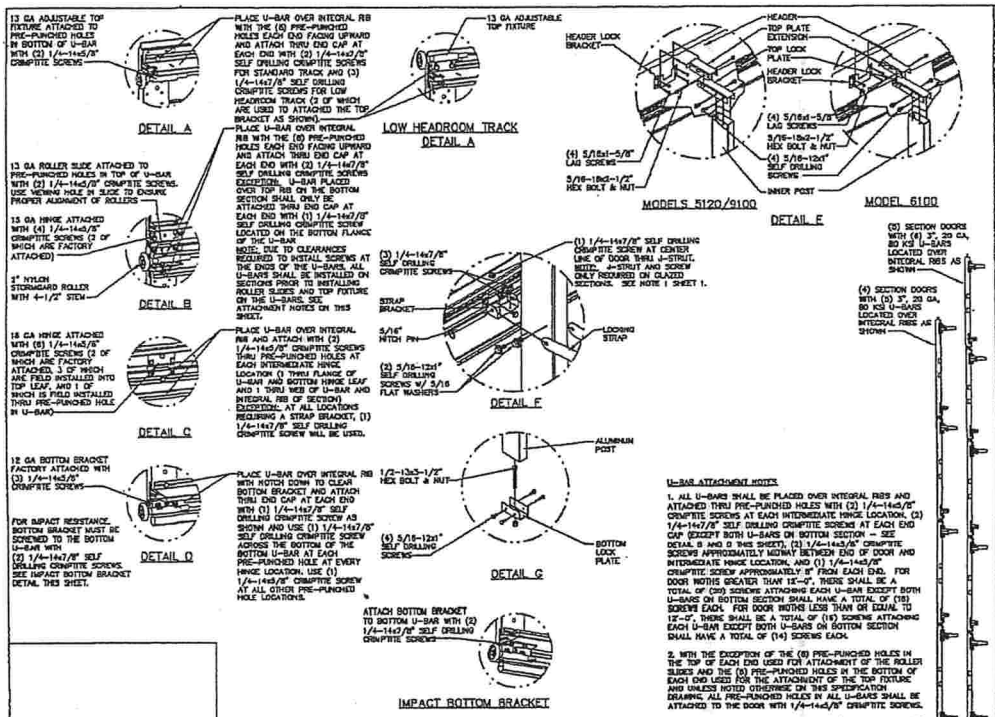

U-BAR ATTACHMENT NOTES

1. ALL U-BARS SHALL BE PLACED OVER INTEGRAL RIBS AND ATTACHED THRU PRE-PUNCHED HOLES WITH (2) 1/4-14x5/8" CRIMPTITE SCREWS AT EACH INTERMEDIATE HINGE LOCATION, (2) 1/4-14x7/8" SELF DRILLING CRIMPTITE SCREWS AT EACH END CAP (EXCEPT BOTH U-BARS ON BOTTOM SECTION – SEE DETAIL B AND D THIS SHEET), (2) 1/4-14x3/8" CRIMPTITE SCREWS APPROXIMATELY MIDWAY BETWEEN END OF DOOR AND INTERMEDIATE HINGE LOCATION, AND (1) 1/4-14x5/8" CRIMPTITE SCREW APPROXIMATELY 8" FROM EACH END. FOR DOOR WIDTHS GREATER THAN 16'-0", THERE SHALL BE A TOTAL OF (20) SCREWS ATTACHING EACH U-BAR EXCEPT BOTH U-BARS ON BOTTOM SECTION SHALL HAVE A TOTAL OF (18) SCREWS EACH. FOR DOOR WIDTHS LESS THAN OR EQUAL TO 12'-0", THERE SHALL BE A TOTAL OF (16) SCREWS ATTACHING EACH U-BAR EXCEPT BOTH U-BARS ON BOTTOM SECTION SHALL HAVE A TOTAL OF (14) SCREWS EACH.

2. WITH THE EXCEPTION OF THE (8) PRE-PUNCHED HOLES IN THE TOP OF EACH END USED FOR ATTACHMENT OF THE ROLLER SLIDES AND THE (8) PRE-PUNCHED HOLES IN THE BOTTOM OF EACH END USED FOR THE ATTACHMENT OF THE TOP FIXTURE AND UNLESS NOTED OTHERWISE ON THIS SPECIFICATION DRAWING, ALL PRE-PUNCHED HOLES IN ALL U-BARS SHALL BE ATTACHED TO THE DOOR WITH 1/4-14x5/8" CRIMPTITE SCREWS.

3. 20 GA U-BARS SHALL BE STAMPED "34" APPROXIMATELY 8" FROM EACH END.

REVISIONS

P1 ADDED SUPERIMPOSED DESIGN PRESSURE LOADS ON SUPPORTING STRUCTURE AND CLARIFIED NUMBER OF FASTENERS AND CENTER HINGES REQUIRED FOR NARROWER DOOR WIDTHS. MRB 5/10/06

P2 ADDED SHORT PANEL GLAZING OPTION (NOTE 1) GRT 6/20/06

P3 ADDED IMPACT RESISTANCE TO DOOR. ADDED JB JAMB BRACKET AT 3" LOCATION. ADDED MODEL 6100. MODIFIED NOTE 8 TO STATE THAT LOUVERS ARE NOT IMPACT RESISTANT. GRT 6/6/07

P4 MODIFIED JAMB BRACKET SCHEDULE FOR FAT OPTION. ADDED LHR TRACK DETAIL SHEET 2. GRT 4/17/08

MARK R. BARROW, PE
FLORIDA LICENSE NO. 57389

Wayne' Dalton
3395 ADDISON DRIVE
PENSACOLA, FLORIDA 32514
(850) 474-9890

STATIC PRESSURE RATINGS		APPROVED SIZES		SCALE: N.T.S.		SIZE: A
DESIGN (PSF):	+39.20/-43.70	MAX WIDTH:	16'-0"		DATE	NAME
TEST (PSF):	+58.80/-65.55	MAX HEIGHT:	8'-0"	DRAWN	3/3/06	GRT
IMPACT/CYCLIC RATED (YES/NO):	YES	MAX SECTION HEIGHT:	21"	CHECKED	4/5/06	MRB

MODELS 5120/6100/9100 — SHEET 2 OF 2

WINDLOAD SPECIFICATION OPTION CODE 0235 — DRAWING PART NO. 319023 — REV. P4

Florida Product Approval # FL9174.6

SHEET: GD2

GARAGE DOORS

10'-16' Wide — Wind Zone 140

RELEASE DATE:

Maronda Homes

(407) 321-0064 4005 MARONDA WAY SANFORD, FLORIDA

REVISIONS :

1-18-08 Revise Garage Door Supplier

2-19-09 Update to Code.

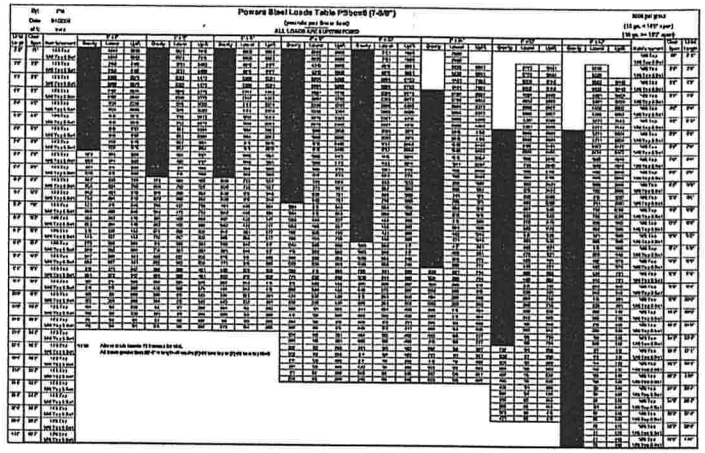

NOTES:

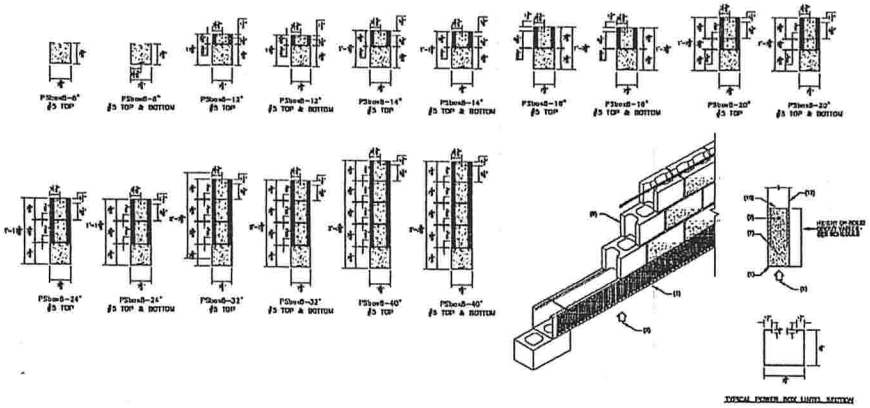

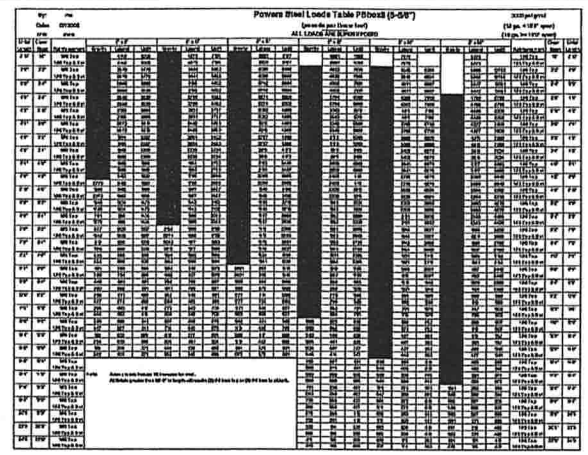

NOTES:

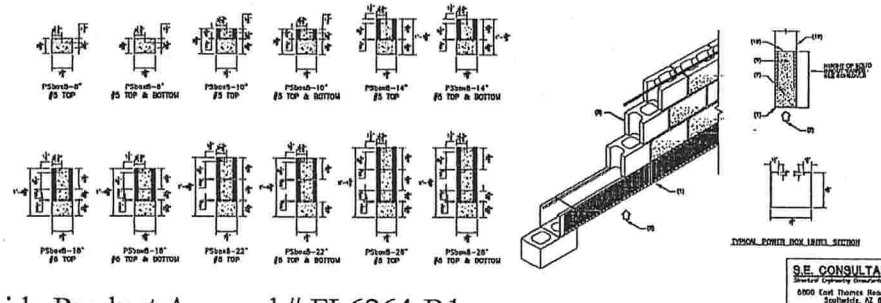

Florida Product Appoval # FL6264-R1

DESCRIPTION	REVISION	BY	DATE
JOB NAME			
JOB NO. 03208-08			
ADDRESS			
DRWG NO.			
ARCHITECT			
ENGINEER			
CONTRACTOR MARYNOGA			

POWERS STEEL & WIRE

DETAILER

DATE AUG. 2008

GRADE

NO.

(602) 437-1160 FAX 437-5409

S.E. CONSULTANTS, Inc.
Structural Engineering Consultants
6800 East Thomas Road, Suite 104
Scottsdale, AZ 85251
(602)437-1160
Fax (602)437-5409

PRODUCT APPROVAL INFORMATION SHEET FOR FLORIDA

Project Name:_____ Permit #_____

Project Address:_____

As required by Florida Statute 553.842 and Florida Administrative Code 9B-72, please provide the information and product approval number(s) for the building components listed below as applicable to the building construction project for the permit number listed above. You should contact your product supplier if you do not know the product approval number for any of the applicable listed products. Information regarding statewide product approval may be obtained at: www.floridabuilding.org.

REVISED 2-18-2009

Category/Subcategory	Manufacturer	Product Description	Limitation of Use	State 2007#	Design Pressures
A. EXTERIOR DOORS					
1. Swinging	Plastpro Inc. / Nanya Plastics Corp.	Fiberglass Dr Single Fiberglass Dr w/ Sidelite Fiberglass Dr w/ Dbl Sidelites Fiberglass Dr Single Glazed	Evaluated for use in locations adhering to the Florida Building Code and where pressure requirements as determined by ACSE 7 Minimum Design Loads for Building and Other Structures.	FL 6184.1 FL 6184.3 FL 6184.5 FL 6729.1	+65 / -70 +50 / -50 +50 / -50 +50 / -50
2. Sliding	Simonton Windows Florida Extruders	Sliding Glass Doors	500 72X80 SGD-R45 Milestone 1000 SGD	FL 5979.1 FL 8409.2	+50 / -50 +45 / -45
3. Sectional					
4. Roll up	Wayne Dalton Corp.	Garage Doors 130 10' - 16' 9100 / 5120 8' – 9' Garage Doors 140 10' - 16' 9100 / 5120 8' - 9'	As indicated in evaluation report and installation drawings. Not to be used in HVHZ.	FL 9174.3 FL 9174.1 FL 9174.6 FL 9174.5	+25.9 /-28.8 +26.9 /-30.8 +39.2 /-43.7 +43.2 /-49.6
B. WINDOWS					
1. Single hung	Florida Extruders	Milestone Series 1000	53" x 84" Max Windows have not been evaluated for use in High Velocity Hurricane Zones.	FL 9262.2	+45 / -45
2. Horizontal slider	Florida Extruders	Milestone Series 1000	74"x72" XO/OX Max Windows have not been evaluated for use in High Velocity Hurricane Zones.	FL 9236.1	+45 / -45
5. Fixed	Florida Extruders	Milestone Series 1000	73"x37" Max Windows have not been evaluated for use in High Velocity Hurricane Zones.	FL 9242.2	+45 / -45
Category/Subcategory	Manufacturer	Product Description	Limitation of Use	State 2007#	Design Pressures
7. Pass-through					
8. Projected					
9. Mullion	Florida Extruders	Milestone Tube Mull	Evaluated for use in locations adhering to the Florida Building Code and where pressure requirements as determined by ACSE 7 Minimum Design Loads for Building and Other Structures.	FL 3136–R3	60 PSF
10. Wind breaker					
11. Dual action					
12. Other					
C. PANEL WALL					
1. Siding					
2. Soffit	Alsco Metal Corp	Quad 4 Aluminum Soffit Systems	For use as soffit only. Not for use in HVHZ.	FL 4459-R1	62.0 PSF
D. ROOFING PRODUCTS					
1. Asphalt shingles	Owens Corning Certain Teed Corp.	Asphalt Shingle Asphalt Shingle	This Approval not for use in the HVHZ. All FBC sections that apply to counties except Broward and Miami-Dade Must be followed.	FL 10674-R1 FL 5444-R1	N/A N/A
2. Underlayments					
3. Roofing fasteners					
4. Nonstructural metal roof					
5. Built-up roofing					
6. Modified bitumen	Polyglass USA	Two layer torch down	The max design pressure for the selected assembly shall meet or exceed the Zone 1 design pressure determined in accordance with FBC chapter 16.	FL 1654-R4	+N/A /-622.5
7. Single ply roofing					

Category/Subcategory	Manufacturer	Product Description	Limitation of Use	State 2007#	Design Pressures
8. Roofing tiles					
9. Roofing insulation					
11. Wood shingles/shakes					
12. Roofing slate					
13. Liquid applied roofing					
14. Cement-adhesive coats					
15. Roof tile adhesive					
16. Spray applied polyurethane roof					
17. Roof vents	Owens Corning Lamanco	Ridge Vent Off Ridge Vent	This Approval not for use in the HVHZ. All FBC sections that apply to counties except Broward and Miami-Dade Must be followed.	FL 10758 FL 3792-R3	N/A N/A
E. SHUTTERS					
1. Storm Panels	ASI Building Products Atrium Shutters, Inc. Alufab Hurricane Shutters Inc. KD Manufacturing	.018" Galvanized Steel Storm Panels 24 GA Galv. Steel Panel 24 & 22 GA Steel Panel KD STORM PANEL	This product may only be installed on concrete, hollow concrete block or wood substrates. This product is NOT suitable for installation in the High Velocity Hurricane Zone or Basic Wind Speed > 140.	FL 7989-R2 FL 5547 FL 4804 FL 2773	+70 / -70 N/A N/A N/A
F. STRUCTURAL COMPONENTS					
Wood connector/anchor	United Steel Products	Anchors, Hangers Etc. Structural Components Wood Connectors	Subject to limitation and installation instructions specified in NOA 05-0105.05.	565-R3,567-R3, 568-R2,569-R3, 570-R2,571-R2, 574-R2,576-R3, 578-R2,815-R1, 816-R1,817-R1, 819-R1,820-R2, 821-R1,822-R1, 859-R4,1247-R1 2033-R2, 4928-R1, 2631-R1, 9833-R1, 10739,11664, 11748, 11838, 11910	
Category/Subcategory	Manufacturer	Product Description	Limitation of Use	State 2007#	Design Pressures
2. Truss plates	Mitek Industries Inc.	Truss Connectors	No Limitation of Use.	FL 2197 R1	N/A
3. Engineered lumber					
4. Railing					
5. Coolers-freezers					
6. Concrete admixtures					
7. Material					
8. Insulation forms					
9. Plastics					
10. Deck-roof					
11. Wall					
12. Sheds					
13. Other	Powers Steel Inc.	PSboxS PHboxS(5-5/8)	Lintels shall not exceed the allowable design load and span. The lintels shall not be used in a fire resistance rated assembly. A proper barrier is required when using corrosive lumber products in contact with steel lintels. Not for use in HVHZ Miami or Broward counties at this time.	6264-R1	N/A
G. SKYLIGHTS					
1. Skylight					
2. Other					
H. NEW EXTERIOR ENVELOPE PRODUCTS					
1.					
2.					

In addition to completing the above list of manufacturers, product description and State approval number for the products used on this project, it is the Contractor's or Authorized Agent's responsibility to have a legible copy of each manufacturer's printed instructions, along with the list above, on the job site available to the inspector.

The products listed below did not demonstrate product approval at time of plan review. I understand that before these products can be inspected, they must be submitted for review for code compliance and approved by a Plans Examiner. This form will be revised to include each new product in the categories listed above and will be highlighted to indicate the new products and required information.

_____

_____

_____

_____

Authorized Project Agent:_____
(Contractor or Design Professional) (Print Name) (Signature)

Company Name:_____

Mailing Address:_____

_____

City:_____ State:_____ Zip Code:_____

Telephone Number: ( )_____ Fax Number: ( )_____

Cell Phone Number: ( )_____ E-mail Address:_____

REVISIONS :
10-29-07 UPDATE LISTS
01-9-08 UPDATE ROLL UP DOORS
08-14-08 ADDED POWERS STEEL LINTELS
09-16-08 ADDED MANUF. ENGRS NOTE
02-23-2009 UPDATED FOR 2007 CODES

Maronda Homes
FLORIDA
(407) 321-0564 4005 MARONDA WAY SANFORD, FLORIDA

FLORIDA
THIS STRUCTURE WAS DESIGNED IN ACCORDANCE AND MEETS THE RESIDENTIAL BUILDING CODE FOR FLORIDA BUILDING CODE 2007 / RESIDENTIAL. ALL CONNECTORS HAVE BEEN CHECKED FOR WIND UPLIFT, BASED ON WIND EXPOSURE B, ENCLOSED BUILDING.

PRODUCT APPROVAL

DRAWN BY:
GARAGE:
RELEASE DATE: MARCH 1, 2009

SHEET:

MATH9

FLORIDA BUILDING CODE 2007 : RESIDENTIAL

PRODUCT APPROVAL INFORMATION SHEET FOR FLORIDA

Project Name:_____ **Permit #**_____

Project Address:_____

As required by Florida Statute 553.842 and Florida Administrative Code 9B-72, please provide the information and product approval number(s) for the building components listed below as applicable to the building construction project for the permit number listed above. You should contact your product supplier if you do not know the product approval number for any of the applicable listed products. Information regarding statewide product approval may be obtained at: www.floridabuilding.org.

REVISED 2-18-2009

Category/Subcategory	Manufacturer	Product Description	Limitation of Use	State 2007#	Design Pressures
A. EXTERIOR DOORS					
1. Swinging	Plastpro Inc. / Nanya Plastics Corp.	Fiberglass Dr Single Fiberglass Dr w/ Sidelite Fiberglass Dr w/ Dbl Sidelites Fiberglass Dr Single Glazed	Evaluated for use in locations adhering to the Florida Building Code and where pressure requirements as determined by ACSE 7 Minimum Design Loads for Building and Other Structures.	FL 6184.1 FL 6184.3 FL 6184.5 FL .6729.1	+65 / -70 +50 / -50 +50 / -50 +50 / -50
2. Sliding	Simonton Windows Florida Extruders	Sliding Glass Doors	500 72X80 SGD-R45 Milestone 1000 SGD	FL 5979.1 FL 8409.2	+50 / -50 +45 / -45
3. Sectional					
4. Roll up	Wayne Dalton Corp.	Garage Doors 130 10' - 16' 9100 / 5120 8' -- 9' Garage Doors 140 10' - 16' 9100 / 5120 8' - 9'	As indicated in evaluation report and installation drawings. Not to be used in HVHZ.	FL 9174.3 FL 9174.1 FL 9174.6 FL 9174.5	+25.9 /-28.8 +26.9 /-30.8 +39.2 /-43.7 +43.2 /-49.6
B. WINDOWS					
1. Single hung	Florida Extruders	Milestone Series 1000	53" x 84" Max Windows have not been evaluated for use in High Velocity Hurricane Zones.	FL 9262.2	+45 / -45
2. Horizontal slider	Florida Extruders	Milestone Series 1000	74"x72" XO/OX Max. Windows have not been evaluated for use in High Velocity Hurricane Zones.	FL 9236.1	+45 / -45
5. Fixed	Florida Extruders	Milestone Series 1000	73"x37" Max Windows have not been evaluated for use in High Velocity Hurricane Zones.	FL 9242.2	+45 / -45
Category/Subcategory	**Manufacturer**	**Product Description**	**Limitation of Use**	**State 2007#**	**Design Pressures**
7. Pass-through					
8. Projected					
9. Mullion	Florida Extruders	Milestone Tube Mull	Evaluated for use in locations adhering to the Florida Building Code and where pressure requirements as determined by ACSE 7 Minimum Design Loads for Building and Other Structures.	FL 3136-R3	60 PSF
10. Wind breaker					
11. Dual action					
12. Other					
C. PANEL WALL					
1. Siding					
2. Soffit	Alsco Metal Corp	Quad 4 Aluminum Soffit Systems	For use as soffit only. Not for use in HVHZ.	FL 4459-R1	62.0 PSF
D. ROOFING PRODUCTS					
1. Asphalt shingles	Owens Corning Certain Teed Corp.	Asphalt Shingle Asphalt Shingle	This Approval not for use in the HVHZ. All FBC sections that apply to counties except Broward and Miami-Dade Must be followed.	FL 10674-R1 FL 5444-R1	N/A N/A
2. Underlayments					
3. Roofing fasteners					
4. Nonstructural metal roof					
5. Built-up roofing					
6. Modified bitumen	Polyglass USA	Two layer torch down	The max design pressure for the selected assembly shall meet or exceed the Zone 1 design pressure determined in accordance with FBC chapter 16.	FL 1654-R4	+N/A /-622.5
7. Single ply roofing					

Category/Subcategory	Manufacturer	Product Description	Limitation of Use	State 2007#	Design Pressures
8. Roofing tiles					
9. Roofing insulation					
11. Wood shingles/shakes					
12. Roofing slate					
13. Liquid applied roofing					
14. Cement-adhesive coats					
15. Roof tile adhesive					
16. Spray applied polyurethane roof					
17. Roof vents	Owens Corning Lamanco	Ridge Vent Off Ridge Vent	This Approval not for use in the HVHZ. All FBC sections that apply to counties except Broward and Miami-Dade Must be followed.	FL 10758 FL 3792-R3	N/A N/A
E. SHUTTERS					
1. Storm Panels	ASI Building Products Atrium Shutters, Inc. Alufab Hurricane Shutters Inc. KD Manufacturing	.018" Galvanized Steel Storm Panels 24 GA Galv. Steel Panel 24 & 22 GA Steel Panel KD STORM PANEL	This product may only be installed on concrete, hollow concrete block or wood substrates. This product is NOT suitable for installation in the High Velocity Hurricane Zone or Basic Wind Speed > 140.	FL 7989-R2 FL 5547 FL 4804 FL 2773	+70 / -70 N/A N/A N/A
F. STRUCTURAL COMPONENTS					
Wood connector/anchor	United Steel Products	Anchors, Hangers Etc. Structural Components Wood Connectors	Subject to limitation and installation instructions specified in NOA 05-0105.05.	563-R3,567-R3, 568-R2,569-R3, 570-R2,571-R2, 574-R2,576-R3, 578-R2,815-R1, 816-R1,817-R1, 819-R1,820-R2, 821-R1,822-R1, 859-R4,1247-R1 2033-R2, 4928-R1, 5631-R1, 9835-R1, 10739,11664, 11748, 11838, 11910	
Category/Subcategory	**Manufacturer**	**Product Description**	**Limitation of Use**	**State 2007#**	**Design Pressures**
2. Truss plates	Mitek Industries Inc.	Truss Connectors	No Limitation of Use.	FL 2197 R1	N/A
3. Engineered lumber					
4. Railing					
5. Coolers-freezers					
6. Concrete admixtures					
7. Material					
8. Insulation forms					
9. Plastics					
10. Deck-roof					
11. Wall					
12. Sheds					
13. Other	Powers Steel Inc.	PSbox8 PSbox8(5-5/8)	Lintels shall not exceed the allowable design load and spans. The lintels shall not be used in a fire resistance rated assembly. A proper barrier is required when using corrosive lumber products in contact with steel lintels. Not for use in HVHZ Miami or Broward counties at this time.	6264-R1	N/A
G. SKYLIGHTS					
1. Skylight					
2. Other					
H. NEW EXTERIOR ENVELOPE PRODUCTS					
1.					
2.					

In addition to completing the above list of manufacturers, product description and State approval number for the products used on this project, it is the Contractor's or Authorized Agent's responsibility to have a legible copy of each manufacturer's printed instructions, along with the list above, on the job site available to the inspector.

The products listed below did not demonstrate product approval at time of plan review. I understand that before these products can be inspected, they must be submitted for review for code compliance and approved by a Plans Examiner. This form will be revised to include each new product in the categories listed above and will be highlighted to indicate the new products and required information.

_____

_____

_____

Authorized Project Agent:_____
(Contractor or Design Professional) (Print Name) (Signature)

Company Name:_____

Mailing Address:_____

City:_____ **State:**_____ **Zip Code:**_____

Telephone Number: ( )_____ **Fax Number:** ( )_____

Cell Phone Number: ( )_____ **E-mail Address:**_____

REVISIONS 1
2-13-07 UPDATED FRC 2007 CODES

Maronda Homes
ENTERPRISE @ 1255 ANDERSON AVENUE
(561) 251-0264 4205 MORRIS CT DAYTONA, FLORIDA

STANDARD DETAILS

FLORIDA PRODUCT APPROVAL

FBC / FRC 2007 CODES

RELEASE DATE: 2-23-2009

SHEET:

REF. DATE

City of Port St. Lucie Building Department Approval Submittal Affidavit — Revised 2-23-2009

Building Permit: **Building Address:** **Contractor:**

Opening Schedule Swing Doors, Overhead Doors, Sliding Doors, Fixed Glass, Windows & Skylights:

Opening ID	Product	Model #	Manufacturer	Glass	Attachment Method	Design Pressures	State Approved #
B	Garage Door 7'X16'	9100, 5120	Wayne Dalton	_____	Attach door bracket to jam w/ 5/16"x1-5/8" lag screws not to exceed 14" O.C. The 2x6 (jam) anchored by 8" J-bolts @ 24" O.C. Ea. side. Blk- 1/2"x3" lag, 1 5/8" emb.	+39.2 / -43.7	FL 9174.6
D	Garage Door 7'x8'	9100, 5120	Wayne Dalton	_____	Attach door bracket to jam w/ 5/16"x1-5/8" lag screws not to exceed 14" O.C. The 2x6 (jam) anchored by 8" J-bolts @ 24" O.C. Ea. side. Blk- 1/2"x3" lag, 1 5/8" emb.	+43.2 / -49.6	FL 9174.5
A	Entry Door	Distinction	Plastpro Inc.	(SIDELITE TEMP.)	Inswing 3/16" Tapcons @ 15" O.C. w/ 1-1/2" Embedment	+50 / -50	FL 6184
A C	Windows W/ All 1x Wood Bucks	Series 1000 Single Hung	Florida Extruders / Milestone	See floor plan	(3) 3/16" x 2 1/4" Tapcons W/ 1-1/4" Min. Embedment @ 24" O.C. Max. SEE DETAILS FOR ATTACHMENT OF 1x WOOD BUCK TO BLOCK	+45 / -45	FL 9262
A	Sliding Glass Door	Series 1000 SGD	Florida Extruders / Milestone	TEMP.	#10 x 1-3/4" screws to 2x wood buck w/ 1-1/2" Embedment @ top and sides. 3/16" x 1-3/4" Tapcons @ Threshold SEE DETAILS FOR ATTACHMENT 0F 2x WOOD BUCK BLOCK	+45 / -45	FL 8409
A C	Windows W/ All 1x Wood Bucks	Series 1000 Horizontal Slider	Florida Extruders / Milestone	See floor plan	(3) 3/16" x 2 1/4" Tapcons W/ 1-1/4" Min. Embedment @ 24" O.C. Max. SEE DETAILS FOR ATTACHMENT OF 1x WOOD BUCK TO BLOCK	+45 / -45	FL 9236
A C	Windows w/ 1x Wood bucks and Bowtop / Arches using 2x Wood Bucks	Series 1000 Fixed	Florida Extruders / Milestone	See floor plan	(3) 3/16" x 3-1/4" Tapcons (w- 1 1/4" Min. Embedment) @ 24" O.C. Max. @ 1x Wood Buck and #10 Screw w/ 1-1/2" Min. Embedment @ 2x Wood Buck SEE DETAILS FOR ATTACHMENT OF ALL WOOD BUCKS TO BLOCK	+45 / -45	FL 9242
A C	Windows w/ 2x Frame Wall	Series 1000 Single Hung	Florida Extruders / Milestone	See floor plan	(3) 10x1-3/4 Screws w/ 1-1/2" Min Embedment @ 24" O.C. Max.	+45 / -45	FL 9262

Building Design Pressures	
A	+ 35.3 / -38.2
B	+ 29.7 / -33.1
C	+ 35.3 / -47.2
D	+ 31.0 / -35.1

Product	Model #	Manufacturer		Attachment Method	Design Pressures	State Approved #
Mullions	FLA-45	FLORIDA EXTRUDERS / MILESTONE	Frame-Block-	(2) #10 1 3/4" Panhead w/ 1 1/2" Min. Embedment (2) 1/4" x 2-1/4" Tapcons w/ 1 1/4" min. Embedment Window Frrame to Mull:#10 x 3/4" Screw	+45 / -45	FL3136-R3
Roof	CLASSIC	OWENS CORNING		8 x 1 1/4" 11-12 GA W/3/8" Head Roofing Nails		FL 10674-R1
Soffit	16" Vented Soffit QUAD	ALSCO METAL CORP.		Staple thru Soffit 8" oc 3/8" width x 5/8 length. T-Nail (5/8" long into block or 1 3/8" Long into Stucco over Block) or Staple 3/8" wide x 5/8" Length into wood @ 16" oc thru Channel. 1 1/4" SS Trim Nail thru Fascia @ 48" oc.	46.71 Psf	FL 4459 R1
Hurricane Panels	.018" Galvanived Steel Non-Porous Strom Panels	ASI BUILDING PRODUCTS	Block-Frame-	1/4" Rawl Calk-in @ 12.5" O.C. w/ 7/8" Embedment 7/16" Brass Bushing & 1/4"-20 Screw @ 12.5" O.C. w/ 5/8" Embedment	+ 70 / - 70	FL 7989 R2

SELECTION OF THE PRODUCTS LISTED ARE BASED ON THE FLORIDA PRODUCT APPROVALS. RESPECTIVE MANUFACTURES RETAIN FULL AND SOLE RESPONSIBILITY FOR THEIR PRODUCTS.

REVISIONS :
10-29-07 UPDATE LISTS
01-01-08 UPDATE ROLL UP DOORS
08-14-08 ADDED POWERS STEEL LINTELS
09-15-08 ADDED MANUF. ENGYRS NOTE
02-23-2009 UPDATED FOR 2007 CODES

Maronda Homes
(407) 321-0064 4005 MARONDA WAY SANFORD, FLORIDA

FLORIDA ARCHITECTURE WAS DESIGNED IN ACCORDANCE AND MEETS THE REQUIRE-MENTS OF THE STATE OF FLORIDA BUILDING CODE, 2007 (RESIDENTIAL). ALL CORRECTIONS HAVE BEEN CHECKED AND COMPLIED WITH FOR WIND EXPOSURE & ENCLOSED BUILDING.

PSL PRODUCT AFFIDAVIT

FBC / FRC 2007 CODES

DRAWN BY: GARAGE:

RELEASE DATE: MARCH 1, 2009

psl\floral_approved.dgn

14-47-49

SHEET:

FLORIDA BUILDING CODE 2007 ,RESIDENTIAL

Installation Instructions

Owens Corning three-tab shingles are designed for new or reroofing work over properly built and supported wood roof decks having adequate nail holding capacity and a smooth surface.

UL Class A Fire Resistance & Wind Resistance Ratings

When applied in accordance with these instructions, these shingles carry the Underwriters Laboratories Class A fire resistance rating, the top rating for residential shingles. They will resist exposure to fire in accordance with UL Standard 790. When applied properly, these shingles also meet UL wind resistance Standard 997. All three-tab shingles have a factory-applied strip of special thermoplastic adhesive on each shingle. After direct exposure to the sun's heat, each course bends securely to the course below (a matter of days in spring through fall seasons; in winter it varies depending on geographical location, roof slope and orientation of the house on the site, in relation to the sun).

Other Roofing Materials You May Need

Metal Drip Edges – are recommended along rake and eave edges of all decks.

Underlayment – is recommended for roofing over any bare deck, and is required for a UL Class A fire rating in most cases. Use only "breather type" material such as Asphalt Saturated Felt or Shingle Underlayment classified by UL as a Prepared Roofing Accessory to assure Class A fire performance and watertight performance from wind-driven rain.

Nails – must be galvanized, 11- or 12-gauge, with heads at least 3/8" in diameter.

Staples – must be 16-gauge minimum, 15/16" minimum crown width and corrosion protected.

All Fasteners – must be driven flush with the shingle surface and penetrate at least 3/4" into the wood deck. Where the deck is less than 3/4" thick, the fastener should be long enough to penetrate fully and extend at least 1/8" through the roof deck. *Owens Corning recommends the use of nails as the preferred method of attaching shingles to wood decking or other nailable surfaces.*

Plastic Cement – where required must meet ASTM D-4586 Type II (Asbestos Free).

1a Deck Preparation

For Standard Slope Decks – 4" in 12" or more

Application of underlayment, metal drip edges and eaves flashing:

(A) Apply one layer of underlayment over metal drip edge at eaves. Use only enough fasteners to hold in place.

(B) Overlap successive courses 2". Overlap course ends 4". Side laps are to be staggered 6' apart.

(C) Apply metal drip edge over underlayment at rake.

Note: Where ice-damming may cause leaks, apply Owens Corning WeatherLock® underlayment or equivalent eaves flashing at least 24" beyond the inside wall line. When using a coated smooth roll or mineral surfaced roll roofing, apply over the underlayment. When using a specialty eaves flashing product, follow the manufacturer's instructions.

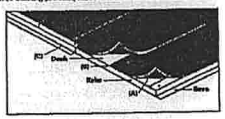

1b Deck Preparation

For Low Slope Decks – 2" in 12" to less than 4" in 12"

Application of underlayment, metal drip edges and eaves flashing:

(A) Apply 19" starter strip of underlayment over metal drip edge at eaves. Use only enough fasteners to hold in place.

(B) Use 36" strip of underlayment for remaining courses, overlapping each course 19". Side laps are to be staggered 6' apart.

(C) Apply metal drip edge over underlayment at rake.

Note: Where eave flashing is required, apply Owens Corning WeatherLock underlayment or equivalent specialty eaves flashing product or apply a continuous layer of asphalt plastic cement between the plies of underlayment at least 24" beyond the inside wall line.

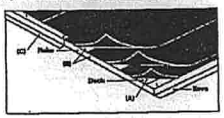

2 Shingle Application

Apply shingles over properly prepared roof deck, starting at bottom of roof and working across and up. This will blend shingles from one bundle into the next and minimize any normal shade variation. Three-tab shingles are applied with a 5" offset (6-9/16" offset with metric also shingles). While a 5" offset (6-9/16" metric) is recommended, application with offsets of 4" or 5" are also acceptable.

Caution must be exercised to assure that end joints are no closer than 2" from a fastener in the shingle below and that side laps are no less than 4" in succeeding courses. Refer to course applications steps for specific instructions.

If racking application methods are used, the applicator must ensure that the proper number of fasteners is used, and use shingles from several different bundles to reduce potential for color variation.

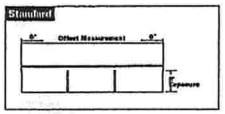

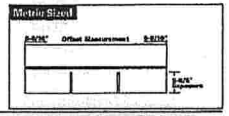

3 Shingle Application

Starter Course

(A) Trim tabs off all starter course shingles so sealant can seal along the eave's edge.

(B) Trim 5" (5-9/16" metric) off rake end of first shingle. Extend 3/8" beyond rake and eaves, and fasten.

(C) Complete rest of starter course. Use five fasteners for each shingle, placed 2" to 8" up from the eaves edge.

First Course

(D) Apply first course starting with a full shingle, even with the starter course. Fasten securely according to instructions.

Note: Complete course with full shingles.

Second Course

(E) Begin second course by positioning first shingle 5" (5-9/16" metric) from the end of the underlying shingle, with the butt edge aligned with the top of the cutouts in the course below.

(F) Leave 5" (5-5/8" metric) exposure, fasten securely and trim excess overhang at rake.

Note: Complete course with full shingles.

Third Course through Sixth Course

(G) Begin each subsequent course by positioning the first shingle 5" (5-9/16" metric) from the end of the underlying shingle, with the butt edge aligned with the top of the cutouts in the course below. Complete by repeating Step (F).

Note: Complete each course with full shingles.

Seventh Course

(H) Apply seventh course starting with a full shingle. Leave 5" (5-5/8" metric) exposure and fasten securely. Complete by repeating Step (F).

Note: Complete course with full shingles. For succeeding courses, repeat steps for second through seventh courses.

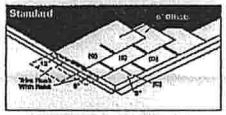

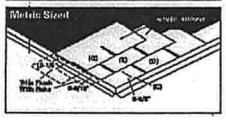

4 Valley Construction

A closed-cut valley is recommended and is applied as follows:

(A) Lay a 36"-wide valley liner of smooth surface roll roofing or Owens Corning *WeatherLock* underlayment or equivalent product. Fasten on outer edges only.

(B) Lay all shingles on one side of valley and across center line of valley a minimum of 12". Fasten a minimum of 6" away from center line on each side of valley.

(C) Strike a chalk line 2" from the center line of the unshingled side. Apply shingles on the unshingled side up to the chalk line and trim, taking care not to cut the underlying shingles. Clip upper corners of these shingles, cement and fasten.

(D) Both woven and metal valleys are acceptable alternatives.

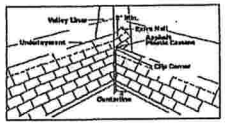

5 Fastening Instructions

Place fasteners 5/8" above the tab cut-out and below the sealant strip. Fastening into the sealant strip interferes with sealing and contributes to blow-offs.

(A) Use four fasteners in normal wind areas.

(B) Use six fasteners per shingle for mansard construction. Use of six fasteners per shingle is recommended in high wind areas.

Note: Do not drive fasteners into or above the adhesive strip.

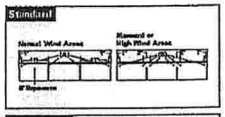

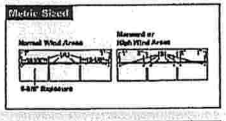

6 Hip & Ridge Application

High Ridge Hip & Ridge and High Style® Hip & Ridge available by region. If cutting three tabs for Hip & Ridge shingles, adhere to the following instructions.

Cut full three-tab shingles into three 12" x 12" (13-1/4" x 13-1/8" metric) Hip & Ridge shingles. Start hips at the eave and work up to ridge. Apply ridge only after hips have been applied, beginning on end of ridge opposite prevailing wind direction. Leave 5" (5-5/8" metric) exposure per shingle for Hip & Ridge application. Bend over the ridge; fasten on each side 5-5/8" (5-1/4" metric) from exposed end, 1" up from the edge. Cover exposed nails with asphalt plastic cement.

For more information on Hip & Ridge shingle application refer to Owens Corning's "How to Apply Hips & Ridges" (Pub. No. 5-RR-18491).

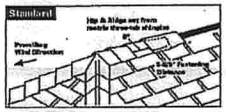

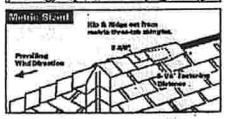

7 Precautionary Notes

The manufacturer will not be responsible for problems resulting from any deviation from the recommended application instructions and the following precautions:

(A) **Roof Decks** Recommended roof decks are 5" maximum width, 25/32" minimum thickness wood sheathing, or 3/8" minimum thickness plywood sheathing. Use plywood decking recommended by the American Plywood Association, Underwriters Laboratories, Inc., or local building codes.

These Owens Corning shingles have been tested and rated as Class A by Underwriters Laboratories when these shingles are applied over recommended decks. If other decks are used, the resulting construction may not qualify as Class A.

Regardless of deck type used, the roofing installer must ensure that the attic ventilation meets or exceeds FHA Minimum Property Standards.

Note: All roof structures, especially Mansard style construction, must have complete through ventilation from bottom to top to prevent heat build-up or entrapment of moisture-laden air that can cause premature shingle failure.

(B) **Handling** Use extra care in handling shingles when the temperature is below 40°F. Shingles can be broken easily in cold weather or their edges damaged in hot weather.

(C) **Fastening** Owens Corning recommends nails as the preferred method of attaching shingles to wood decking or other nailable surface. Drive all fasteners until they are flush with the surface of the shingle. Special care must be taken when using pneumatic staples or nail guns. An improperly adjusted pneumatic gun can result in raised fasteners causing sealing failure, raised tabs, leaks or blow-off.

Guidelines on fastener size, number and location must be followed. Owens Corning will not be responsible for any wind damage that occurs with shingles which have not been applied in accordance with these instructions.

(D) **Mansard or Steep Slopes** For slopes exceeding 50 degrees or 21 inches per foot, use six fasteners and two spots of asphalt plastic cement per tab. All six fasteners must be spaced equally. Place two spots of asphalt plastic cement, 1" in diameter, under each shingle tab immediately upon installation.

(E) **Storage** Store in a covered ventilated area at a maximum temperature of 110°F. Protect shingles from weather when stored at the job site. Do not store near steam pipes, radiators, etc.

(F) **Hip & Ridge Shingles** These shingles should be cut from the back (smooth) side.

(G) **All exposed material must be rated Class A by Underwriters Laboratories to maintain a Class A system.**

8 Reroofing

If old asphalt shingles are to remain in place, nail down or cut away all loose, curled or lifted shingles. Sweep the surface clean of all loose debris just prior to applying the new roofing. Ensure proper size and length of fasteners. If roofing over old wood shingles, cut back the old shingles at eaves and rakes and apply wood edging strips. Some local building codes may require the use of a No. 30 asphalt saturated felt over the old wood shingles prior to reroofing. Consult local building code authorities. Surface must be smooth before shingles are installed. Make deck smooth by nailing down all loose and curled shingles, protruding nails, etc. Install beveled wood feathering strips, if necessary.

When roofing over existing shingles with a 5" (5-5/8" metric) tab exposure, the following procedure should be used for smoothest finished appearance and ease of alignment:

(A) **Starter Courses** Make starter shingles by removing the 5" (5-5/8" metric) tabs and cutting a 5" strip off the top of the shingles. Lay starter shingles so the top edge butts against the lower edge of the second course of the existing roof. Place the thermal sealing adhesive toward the eave edge. Secure with five fasteners evenly spaced per starter shingle placed 2" to 8" from the eaves edge. Complete the course.

(B) **First Course** Trim 2" (2-1/8" metric) off the tops of all first course shingles. Lay them with their top edge butted against the bottom of the third course of the existing roof. Continue as instructed above.

(C) **Second Course and Others** Use full-sized shingles and place them so their top edge is butted against the bottom edge of the next course of existing shingles. Continue as instructed above.

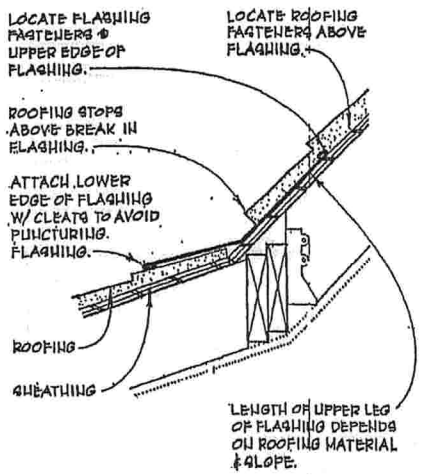

PITCH - CHANGE FLASHING

Type of Flashing: Galvanized
Thickness of Flashing: 26 gauge
Minimum over lap joint: 4-6 inches

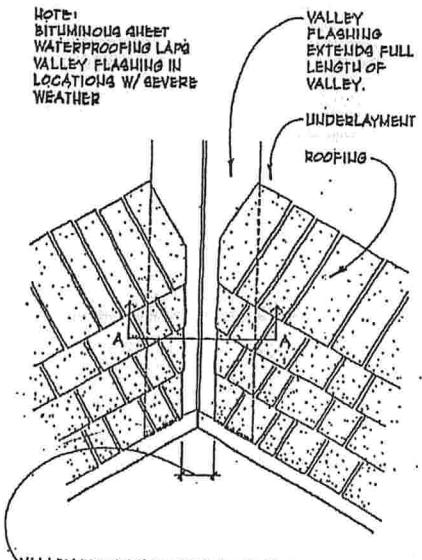

VALLEY LINING TO BE AT LEAST 16" WIDE AS PER R905.2.8.2

VALLEY FLASHING

Florida Product Approval # FL10674-R1

REVISIONS :
2-16-09 Updated to Code.

Maronda Homes
4005 MARONDA WAY SANFORD, FLORIDA
(407) 321-0054

ROOF COVERING DETAILS

RELEASE DATE: 08/13/08

SHEET:
RC

OWENS CORNING ▲ INNOVATIONS FOR LIVING™

APPROVED APPLICATIONS

Trademarks: Vent Sure Standard, Vent Sure Low Profile, Vent Sure Ridge Vent & Vent Sure Rigid Roll

System Type A: Mechanical attachment of ridge vent system over composition shingles.

Cutout:

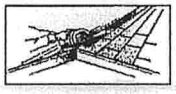

1. Determine whether the rafters are truss or ridgepole construction. Cut sheathing 2" (truss) or 3-1/2" (ridge pole) wide slot (1" truss or 1-3/4" ridge pole on each side) of the ridge(s). A minimum of 6" must be left uncut on each end of the ridge. Once the slot is cut and any overlapping shingles covering the ridge are trimmed and removed, the ridge is ready for vent installation.

Installation:

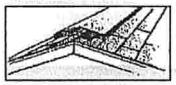

2. Place the Vent Sure vent, routed side down along entire length of slot also covering the 6" minimum uncut ridge on both ends. Multiple lengths of vent can be joined by butting them together.

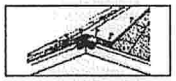

3. Pull apart a 3" or 5-1/4" precut section of the foam endcap. Using construction adhesive or sealant caulk, insert the endcap into the end of the vent. Using four (4) 2" galvanized roofing nails, attach vent to the roof deck by driving a nail in each of the two corners on both ends of the vent, and a nail at each side through the foam cap.

Note: The wind deflector is not required for the Vent Sure Ridge Vent and Rigid Roll.

4. Slide wind deflector between the vent and the roof shingle until the edge of the two placement notches align with edge of vent. Drive 2 additional 2" roofing nails on each side of the vent to hold the deflector in place. If the 96" or longer vent is being installed, then repeat this process along the entire length of the vent.

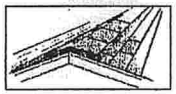

5. After vent has been installed, cut ridge shingles, preform, and nail with roofing nails in a common overlapping pattern. Nails should be approximately 5" apart and long enough to penetrate the wood roof deck at least ½". Repeat this procedure until vents have been installed over all roof ridges.

Net Free Area: Refer to manufacturers published literature

Minimum Slope: 3:12

Florida Product Approval # FL10758

LOMANCO 770D ROOF VENT INSTALLATION INSTRUCTIONS

Thank you for your patronage in purchasing the LOMANCO 770D Roof Vent. The 770D is an exhaust vent that will help eliminate damaging heat and moisture from your attic when properly installed with intake vents.

IMPORTANT

1. READ THESE INSTRUCTIONS CAREFULLY BEFORE STARTING INSTALLATION.
2. Installation of the Lomanco 770D Roof Vent should comply with all local codes and standards.
3. WARNING! Sharp edges are exposed during installation. Use gloves and other appropriate safety equipment to avoid injury.

INSTALLATION:

1. Aesthetically it is best to locate vents on the rear slope of the house. You also want to center vents on the roof length. (If you are installing two vents, locate each one 1/4 the distance from each end of roof. When installing three vents locate one in the center and the other two 1/8 the distance from each end of roof.)

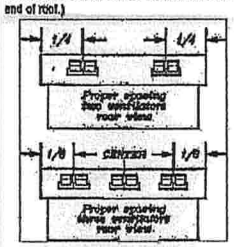

2. The seam of base should be centered on rafter centerline. Locate rafter by tapping roof with hammer. Measure over 7-11/16" each side of rafter centerline. Mark these positions.

3. Warm air rises; therefore, you want to locate roof vents as near as possible to the ridgeline. Locate the vent holes roughly 24" (36" Max.) down from the ridgeline to keep the top of the roof vent below the ridgeline. Mark this position. Vent location position should now be approximately 24" down from ridgeline and centered over rafter.

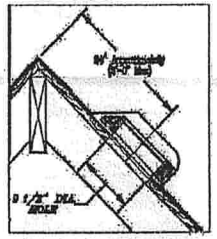

4. Using marked positions as center point scribe two 9-1/2" diameter circles. Drill a starter hole inside circles, a ½" drill bit should do this nicely.

5. Starting in the drill holes cut two 9 1/2" diameter circular openings, using either a keyhole saw or an electric saber saw with sharp coarse blade. If you do not have a coarse blade, cut away shingles inside the circle with utility knife before cutting roof decking. Take care not to make the holes too large, or water leakage may occur.

6. Carefully remove roofing nails from top row of shingles so that the flashing of the roof vent will slide under top row.

7. Apply roofing cement around the edge of the hole at the top and sides.

8. Carefully slide vent into place with arrow pointing up. Make sure throat of vent is centered over vent hole. Fasten the base to roof decking with roofing nails as shown below. Keep heads of nails under shingles to prevent water leakage.

9. Finish mounting by sealing all seams and nails with flashing cement. Also use roofing cement to fasten down loose edges of shingles.

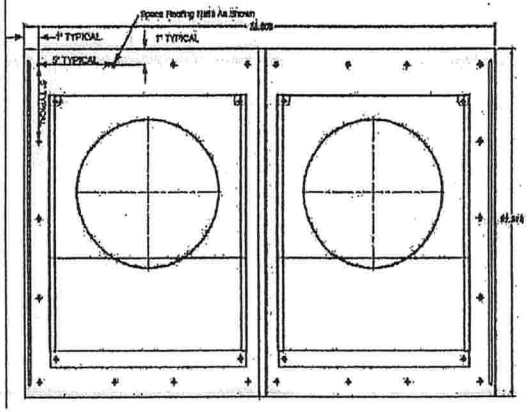

Florida Product Approval # FL3792-R3

REVISIONS:
2-16-09 Updated to Code.

Maronda Homes
(407) 321-0564 4605 MARONDA WAY SANFORD, FLORIDA

ROOF VENT DETAILS

1 of 2

DRAWN BY:
GARAGE:
RELEASE DATE:

SHEET:
RVD

GENERAL NOTES:

1- THIS PRODUCT IS DESIGNED AND TESTED (SSTD 12-99, ASTM E330-02, E1996-02, E1886-02) IN ACCORDANCE WITH THE THE FLORIDA BUILDING CODE 2004 EDITION (MDL APPLICABLE FOR USE IN HIGH VELOCITY HURRICANE ZONES)

2- PANELS SHALL BE PERMANENTLY LABELED WITH A MINIMUM OF ONE LABEL PER OPENING OR A CERTIFICATE OF COMPLIANCE SHALL BE PROVIDED BY THE MANUFACTURER AND INSTALLER. LABEL SHALL READ AS FOLLOWS

ALUFAB
22ga & 24ga STORM PANEL
LARGE MISSILE IMPACT RESISTANT

3- MATERIAL:
3.1 - STORM PANELS SHALL BE 24 GAUGE (0.0245") OR 22 GAUGE (0.0310) STEEL CONFORMING TO ASTM A-653/A-924, GRADE 80, G60 WITH A MINIMUM Fy= 93 Ksi (24 GA) AND Fy= 101 Ksi (22 GA).
3.2 - ALL ALUMINUM EXTRUSIONS SHALL BE 6063-T6

4- ANCHORS SHALL BE AS SHOWN ON THIS APPROVAL. ANCHOR ENGAGEMENT TO BASE MATERIAL SHALL BE BEYOND WALL DRESSING.

5- A LICENSED ENGINEER OR ARCHITECT SHALL PROVIDE A SITE SPECIFIC WIND LOAD FOR A PROJECT AS PER ASCE 7-98 OR LATEST. THE CONTRACTOR, ENGINEER OR ARCHITECT SHALL VERIFY THE ADEQUACY OF THIS PRODUCT WITH THE PROJECT WIND LOADS.

6- THE CONTRACTOR MUST VERIFY THE ADEQUACY OF THE EXISTING STRUCTURE IN SUSTAINING THE SHUTTER IMPOSED LOADS.

7- PANELS CAN BE OVERLAPPED TO CREATE A 1/2 PANEL INSTALLATION.

8- ALUFAB RECOMMENDS A MINIMUM 1' GLASS SEPARATION IF PANELS ARE TO BE USED OUTSIDE A HURRICANE WARNING PERIOD. NO SEPARATION IS REQUIRED IF PANELS ARE TO BE USED WITHIN A HURRICANE WARNING PERIOD. HURRICANE WARNING IS ISSUED BY THE NATIONAL HURRICANE CENTER.

INDEX:

TYPICAL ELEVATION
PANELS CAN BE INSTALLED VERTICALLY OR HORIZONTALLY USING APPLICABLE ANCHORING DETAILS

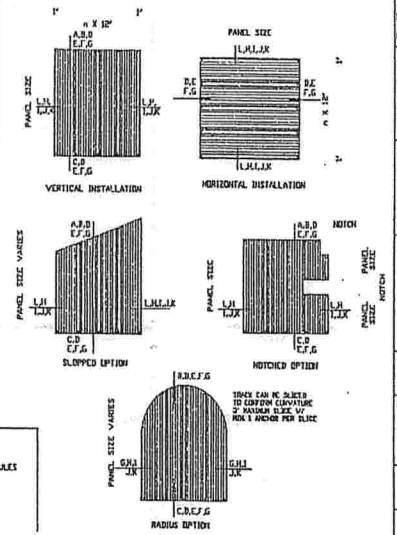

Manufacturer:
ALUFAB
ALUFAB HURRICANE SHUTTER INC
ALUFAB SOUTHWEST INC
13000 NW 38TH AVE.
MIAMI, FL 33054
Tel.: (305) 688-4701
Fax.: (305) 688-8033

Product:
24 & 22 ga Galvanized Steel Storm Panels

Engineering:
EngCo Inc.
CA 8118
8871 W. Sunrise Blvd. 104
Plantation, FL 33313
Tel.: (954) 585-0304
Fax: (954) 585-0305

Engineer Seal
Pedro De Figueiredo
PE 52609

Date: 05/04/05
Scale: na
Design by: PPMF
REVISION:

Drawing Number
05-162

Sheet
1 of 8

TABLE 1 - 24 Gauge ALLOWABLE DESIGNED PRESSURES:	
Panel Height (in)	Pd (+/-) (psf)
144	28
138	32
132	35
126	39
120	42
114	47
108	52
105	55
102	59
96	65
90	75
84	82
78	88
72	95
66	104

TABLE 2 - 22 Gauge ALLOWABLE DESIGNED PRESSURES:	
Panel Height (in)	Pd (+/-) (psf)
152	28
149	30
146	32
143	34
140	36
137	39
134	42
131	44
128	48
125	51
122	54
119	58
116	57
113	59
111	60

COMPONENTS SCHEDULE

PART	DESCRIPTION	MATERIAL
1a	24 GAUGE ROLL FORMED PANEL	STEEL
1b	22 GAUGE ROLL FORMED PANEL	STEEL
2	STUD ANGLE TRACK	6063-T6
3	"U" CEILING TRACK	6063-T6
4	1/8"x2" BUILT-OUT ANGLE	6063-T6
5	"J" TRACK	6063-T6
6	"F" BUILT-OUT TRACK	6063-T6
7	"H" HEADER TRACK	6063-T6
8	"G" SILL TRACK	6063-T6
9	KEY HOLE WASHER	.055 GALV. STEEL
10	1/4-20 WASHERS & WINGNUT	ZINC ALLOY
11	1/4-20 SS SIDEWALK SCREWS	STAINLESS STEEL
12	1/4-20 SS PAN MACHINE SCREWS	STAINLESS STEEL
13	1/4-20 SS PAN NUT	STAINLESS STEEL
14	1/4-20 SS PAN MACHINE SCREWS	STAINLESS STEEL

ANCHOR SCHEDULE

TYPE	DESCRIPTION	Embed.	Edge Dist.
A1	1/4" spacons into CMU (f'c=2000psi)	1 1/4"	2 1/8"
A2	1/4" spacons into Concrete (f'c=3500psi)	1 1/8"	2 1/8"
A3	1/4" spacons into Wood (SG=.55)	1 1/8"	3/4"
B1	1/4" Powderpoint into CMU (f'c=2000psi)	1/4"	2 1/2"
B2	1/4" Powderpoint into Concrete (f'c=3500psi)	2"	2 1/2"
B3	1/4" Powderpoint into Wood (SG=.55)	1 7/8"	3/4"
C1	1/4-20 Masonry anchors into CMU (f'c=2000psi)	1 7/8"	3"
C2	1/4-20 Masonry anchors into Concrete (f'c=3500psi)	1 7/8"	3"
D	1/4-20 Wood Bushing into Wood (SG=.55)	3/4"	3/4"
E	1/4"x5 SDS into Wood (SG=.55)	1 1/2"	3/4"
F	1/4"-14 Drillflex into 1/8" Alum. or Steel	1/8"	3/4"

Notes:
1- Embedment is beyond wall dressing.
2- Powderpoint can be used in "Plus, Male and Female" sites.

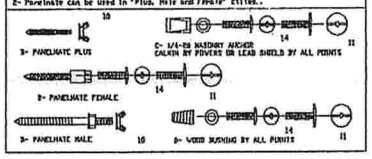

TABLE 3
MINIMUM ALLOWABLE SPAN SCHEDULE
24 AND 22 GA PANELS

	HEADER MOUNT DETAIL									
	A	B	D	Dm	E	Em	F	Fm	G	
24GA	0	0	0	0	29	35	0	29	66	
22GA	0	0	0	0	29	35	0	29	66	
24GA	25	29	29	29	58	55	29	58	58	
22GA	25	35	35	35	58	58	35	58	58	
24GA	0	0	0	0	29	35	0	29	29	
22GA	25	29	29	29	58	55	29	58	58	
24GA	25	29	29	29	58	55	29	58	43	
22GA	25	29	29	29	58	58	29	58	43	

NOTES:
1- PANEL LENGTHS SHOWN HERE ARE MINIMUM ALLOWABLE SIZE BASED ON COMBINATION OF MOUNTING CONDITIONS AT TOP AND BOTTOM.
2- INSTALLATION FOR LESS THAN 3 PANELS AND WITH LENGTHS LESS THAN THOSE NOTED IN THIS TABLE WILL REQUIRE TOP AND BOTTOM CLOSURE AS PER DETAIL H BELOW OR MEET CRITERIA ON NOTE #4 BELOW.
3- SIDE CLOSURES ARE REQUIRED FOR PANEL WITH WALL SEPARATION GREATER THAN 1/4".
4- WHEN GLASS SEPARATION IS GREATER OR EQUAL TO 7 7/8" FOR 24GA AND 6 1/2" FOR 22 GA. PANEL, LENGTHS ARE NOT LIMITED IN ANY COMBINATION. ALSO UNDER THIS CONDITION SIDE CLOSURE ARE NOT REQUIRED IF PANELS OVERLAP SIDE RAILS 1.5 OF BUILT-OUT. (SEE DETAIL H ON SHEET 8)

DETAIL H

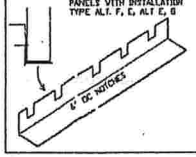

Manufacturer:
ALUFAB
ALUFAB HURRICANE SHUTTER INC
ALUFAB SOUTHWEST INC
13000 NW 38TH AVE.
MIAMI, FL 33054
Tel.: (305) 688-4701
Fax.: (305) 688-8033
Product:
24 & 22 ga Galvanized Steel Storm Panels
Engineering:
EngCo Inc.
CA 8118
8871 W. Sunrise Blvd. 104
Plantation, FL 33313
Tel.: (954) 585-0304
Fax: (954) 585-0305
Engineer Seal
Pedro De Figueiredo
PE 52609
Date: 05/04/05
Scale: na
Design by: PPMF
REVISION:
Drawing Number
05-162

Sheet
2 of 8

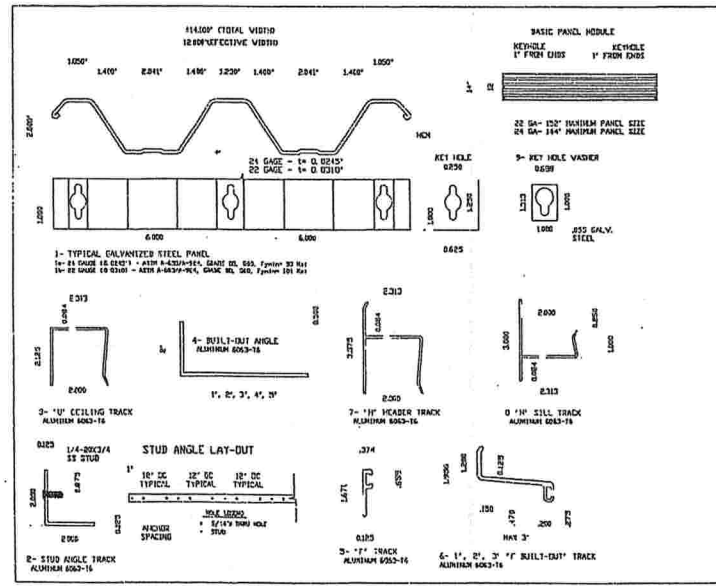

Manufacturer:
ALUFAB
ALUFAB HURRICANE SHUTTER INC
ALUFAB SOUTHWEST INC
13000 NW 38TH AVE.
MIAMI, FL 33054
Tel.: (305) 688-4701
Fax.: (305) 688-8033
Product:
24 & 22 ga Galvanized Steel Storm Panels
Engineering:
EngCo Inc.
CA 8118
8871 W. Sunrise Blvd. 104
Plantation, FL 33313
Tel.: (954) 585-0304
Fax: (954) 585-0305
Engineer Seal
Pedro De Figueiredo
PE 52609
Date: 05/04/05
Scale: na
Design by: PPMF
REVISION:
Drawing Number
05-162

Sheet
3 of 8

MOUNT TYPE A

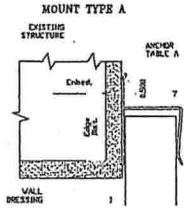

TABLE A - MAXIMUM ANCHOR SPACING ON CENTER

ANCHOR A1				ANCHORS A2, A3, C				ANCHOR F			
Pd (psf)	PANEL C=66"	PANEL C=108"	PANEL C=132"	Pd (psf)	PANEL C=66"	PANEL C=108"	PANEL C=132"	Pd (psf)	PANEL C=66"	PANEL C=108"	PANEL C=132"
20	12	9	7	20	12	9	7	20	6	3	3
40	9	6		40	12	6		40	6	3	3
50	6	3		50	9	6		50	6	3	3
60	6	3		60	6	3		60	3	3	
75	3			75	6			75	3		
104	3			104	3			104			

MOUNT TYPE B

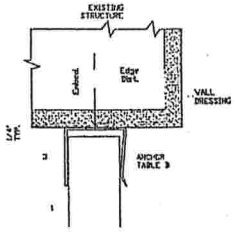

TABLE B - MAXIMUM ANCHOR SPACING ON CENTER

ANCHOR A2				ANCHORS A3, C, F			
Pd (psf)	PANEL C=66"	PANEL C=108"	PANEL C=132"	Pd (psf)	PANEL C=66"	PANEL C=108"	PANEL C=132"
20	12	12	10	20	12	9	7
40	9	6		40	12	6	
50	9	6		50	9	6	
60	6	3		60	9	6	
75	6			75	6	3	
104	3			104	3		

Manufacturer:
ALUFAB
ALUFAB HURRICANE SHUTTER INC
ALUFAB SOUTHWEST INC
13000 NW 38TH AVE.
MIAMI, FL 33054
Tel.: (305) 688-4701
Fax.: (305) 688-8033
Product:
24 & 22 ga Galvanized Steel Storm Panels
Engineering:
EngCo Inc.
CA 8118
8871 W. Sunrise Blvd. 104
Plantation, FL 33313
Tel.: (954) 585-0304
Fax: (954) 585-0305
Engineer Seal
Pedro De Figueiredo
PE 52609
Date: 05/04/05
Scale: na
Design by: PPMF
REVISION:
Drawing Number
05-162

Sheet
4 of 8

REVISIONS :

Maronda Homes
(407) 321-0054 4005 MARONDA WAY SANFORD, FLORIDA

ALUFAB HURRICANE SHUTTERS INC.

SHUTTER DETAILS

1 OF 2 PAGES

RELEASE DATE: MARCH 1, 2009

SHEET:
SHU

MOUNT TYPE C

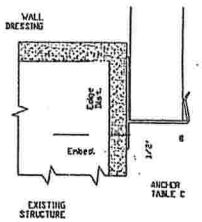

TABLE C - MAXIMUM ANCHOR SPACING ON CENTER

ANCHOR A1				ANCHORS A2, A3, F				ANCHOR F			
Pd (psf)	PANEL <=66"	PANEL <=108	PANEL <=152	Pd (psf)	PANEL <=66"	PANEL <=108	PANEL <=152	Pd (psf)	PANEL <=66"	PANEL <=108	PANEL <=152
20	12	9	6	20	12	12	9	20	12	6	3
40	12	6		40	12	9		40	9	3	
50	9	6		50	12	6		50	6	3	
60	6	3		60	9	6		60	3	3	
75	6			75	6			75	3		
104	3			104	3			104	3		

MOUNT TYPE D

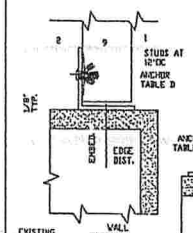

ALTERNATE D

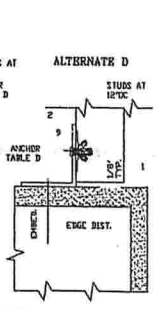

TABLE D - MAXIMUM ANCHOR SPACING ON CENTER

ANCHOR A2, B2, C2				ANCHORS A3, E, F				ANCHOR D			
Pd (psf)	PANEL <=66"	PANEL <=108	PANEL <=152	Pd (psf)	PANEL <=66"	PANEL <=108	PANEL <=152	Pd (psf)	PANEL <=66"	PANEL <=108	PANEL <=152
20	12	12	12	20	12	12	9	20	12	9	6
40	12	12		40	12	9		40	12	6	
50	12	9		50	9	6		50	9	6	
60	12	6		60	9	6		60	6	3	
75	9			75	6			75	6		
104	6			104	3			104	3		

Manufacturer:
ALUFAB
ALUFAB HURRICANE SHUTTER INC
ALUFAB SOUTHWEST INC
13000 NW 38TH AVE.
MIAMI, FL 33054
Tel.: (305) 688-4701
Fax.: (305) 688-8033

Product:
24 & 22 ga Galvanized Steel Storm Panels

Engineering:
EngCo Inc.
CA 8118
8871 W. Sunrise Blvd. 104
Plantation, FL 33313
Tel.: (954) 585-0304
Fax: (954) 585-0305

Engineer Seal
Pedro De Figueiredo
PE 32698

Date: 05/04/05
Scale: no
Design by: PPWF

REVISION:

Drawing Number
05-162

Sheet
5 of 8

MOUNT TYPE F

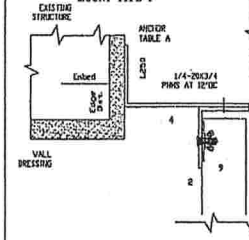

ALTERNATE F

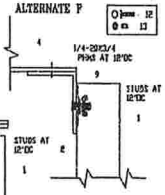

TABLE F - MAXIMUM ANCHOR SPACING ON CENTER

ANCHOR A2, A3, C2, C				ANCHORS A1, F, D			
Pd (psf)	PANEL <=66"	PANEL <=108	PANEL <=152	Pd (psf)	PANEL <=66"	PANEL <=108	PANEL <=152
20	12	12	9	20	12	6	6
40	12	9		40	9	6	
50	12	6		50	6	3	
60	9	6		60	6	3	
75	6			75	3		
104	6			104	3		

ANCHORS B1				ANCHOR B2			
Pd (psf)	PANEL <=66"	PANEL <=108	PANEL <=152	Pd (psf)	PANEL <=66"	PANEL <=108	PANEL <=152
20	9	6	3	20	12	12	12
40	6	3		40	12	12	
50	6	3		50	12	12	
60	3	3		60	12	9	
75	3			75	12		
104				104	9		

ANCHORS E3				ANCHORS C1			
Pd (psf)	PANEL <=66"	PANEL <=108	PANEL <=152	Pd (psf)	PANEL <=66"	PANEL <=108	PANEL <=152
20	12	12	6	20	12	6	3
40	12	6		40	9	3	
50	9	6		50	6	3	
60	9	3		60	3	3	
75	6			75	3		
104	3			104	3		

MOUNT TYPE E

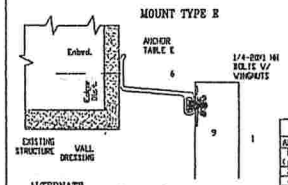

ALTERNATE MOUNT TYPE E

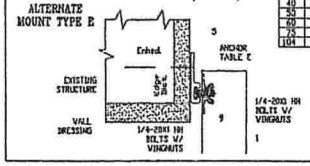

TABLE E - MAXIMUM ANCHOR SPACING ON CENTER

ANCHOR A1				ANCHORS A2, A3, C				ANCHOR F			
Pd (psf)	PANEL <=66"	PANEL <=108	PANEL <=152	Pd (psf)	PANEL <=66"	PANEL <=108	PANEL <=152	Pd (psf)	PANEL <=66"	PANEL <=108	PANEL <=152
20	12	6	6	20	12	9	6	20	9	6	3
40	9	6		40	12	6		40	6	3	
50	6	3		50	9	6		50	3	3	
60	6	3		60	6	3		60	3	3	
75	3			75	6			75	3		
104	3			104	3			104	3		

Manufacturer:
ALUFAB
ALUFAB HURRICANE SHUTTER INC
ALUFAB SOUTHWEST INC
13000 NW 38TH AVE.
MIAMI, FL 33054
Tel.: (305) 688-4701
Fax.: (305) 688-8033

Product:
24 & 22 ga Galvanized Steel Storm Panels

Engineering:
EngCo Inc.
CA 8118
8871 W. Sunrise Blvd. 104
Plantation, FL 33313
Tel.: (954) 585-0304
Fax: (954) 585-0305

Engineer Seal
Pedro De Figueiredo
PE 32698

Date: 05/04/05
Scale: no
Design by: PPWF

REVISION:

Drawing Number
05-162

Sheet
6 of 8

MOUNT TYPE G

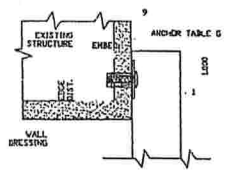

TABLE G - MAXIMUM ANCHOR SPACING ON CENTER

ANCHORS B1				ANCHOR B2, B3, C2			
Pd (psf)	PANEL <=66"	PANEL <=108	PANEL <=152	Pd (psf)	PANEL <=66"	PANEL <=108	PANEL <=152
20	18	12	6	20	12	12	12
40	12	6		40	12	12	
50	12	6		50	12	12	
60	12	6		60	12	12	
75	6			75	12		
104	6			104	12		

ANCHOR C1, E			
Pd (psf)	PANEL <=66"	PANEL <=108	PANEL <=152
20	18	12	12
40	12	18	
50	12	18	
60	12	6	
75	12		
104	6		

INSIDE ACCESS PANEL

INSIDE ACCESS PANEL: ONE MID PANEL INSTALLED FOR LAST, UTILIZED A REMOVABLE HANDLE ON THE INTERIOR SIDE TO FACILITATE THE INSTALLATION.

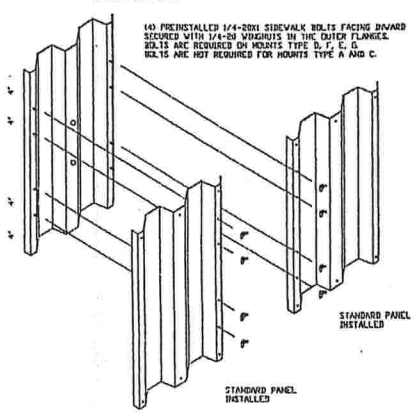

Manufacturer:
ALUFAB
ALUFAB HURRICANE SHUTTER INC
ALUFAB SOUTHWEST INC
13000 NW 38TH AVE.
MIAMI, FL 33054
Tel.: (305) 688-4701
Fax.: (305) 688-8033

Product:
24 & 22 ga Galvanized Steel Storm Panels

Engineering:
EngCo Inc.
CA 8118
8871 W. Sunrise Blvd. 104
Plantation, FL 33313
Tel.: (954) 585-0304
Fax: (954) 585-0305

Engineer Seal
Pedro De Figueiredo
PE 32698

Date: 05/04/05
Scale: no
Design by: PPWF

REVISION:

Drawing Number
05-162

Sheet
7 of 8

DETAIL L INSET CLOSURE

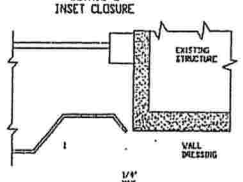

DETAIL N WALL OVERLAP

SEE TABLE 3 NOTE 4

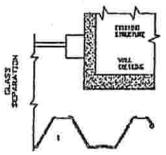

MIN. OVERLAP = BUILT-OUT X 1.5

FOR POCKET DOORS AND POCKET WINDOWS OVERLAP CAN BE OVER THE POCKET SECTION
POCKET DESIGNED FOR SHUTTER LOADS IN OPENED

DETAIL H BUILT-OUT SIDE CLOSURE

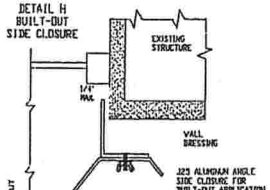

DETAIL I WALL CLOSURE

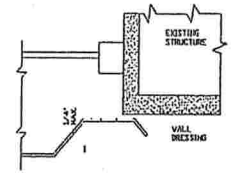

DETAIL K CORNER ANGLE

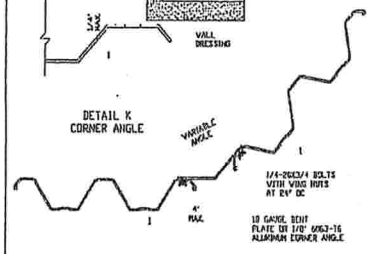

DETAIL J INSET EXTENDED CLOSURE

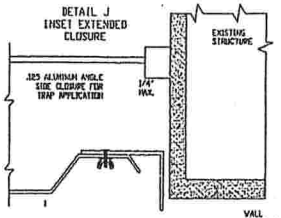

Manufacturer:
ALUFAB
ALUFAB HURRICANE SHUTTER INC
ALUFAB SOUTHWEST INC
13000 NW 38TH AVE.
MIAMI, FL 33054
Tel.: (305) 688-4701
Fax.: (305) 688-8033

Product:
24 & 22 ga Galvanized Steel Storm Panels

Engineering:
EngCo Inc.
CA 8118
8871 W. Sunrise Blvd. 104
Plantation, FL 33313
Tel.: (954) 585-0304
Fax: (954) 585-0305

Engineer Seal
Pedro De Figueiredo
PE 32698

Date: 05/04/05
Scale: no
Design by: PPWF

REVISION:

Drawing Number
05-162

Sheet
8 of 8

REVISIONS:

Maronda Homes
(407) 321-0064 4005 MARONDA WAY SANFORD, FLORIDA

ALUFAB HURRICANE SHUTTERS INC.

SHUTTER DETAILS

2 OF 2 PAGES

RELEASE DATE: MARCH 1, 2009

SHEET:
SHU

ANCHORSafe
BUILDING PRODUCTS Storm Protection Products

ASI BUILDING PRODUCTS
CORPORATE OFFICE, 4720 EAST ADAMS DRIVE
TAMPA, FL 33605
(800) 282-6824

28 GAUGE GALV. STEEL
STORM PANEL

DIRECT MOUNT

1. STEEL STORM PANELS SHALL BE ASTM A653 G5-R, 0.018" THICKNESS.
2. THIS SYSTEM HAS BEEN TESTED AND EVALUATED AS A LARGE MISSILE IMPACT PROTECTIVE SYSTEM IN ACCORDANCE WITH THE REQUIREMENTS OF THE 2004 FLORIDA BUILDING CODE, EXCLUDING THE 100MC.
3. PRODUCT MARKINGS SHALL BE ROLLED INTO EACH PANEL WITH SPACING IN BETWEEN MARKINGS NO GREATER THAN 36".
4. POSITIVE AND NEGATIVE DESIGN PRESSURES TO BE USED WITH THESE DRAWINGS SHALL BE DETERMINED BY OTHERS FOR SPECIFIC JOBS IN ACCORDANCE WITH THE GOVERNING CODE.
5. THE SYSTEM DETAILED HEREIN IS GENERIC AND DOES NOT PROVIDE INFORMATION FOR A SPECIFIC SITE. IF SITE CONDITIONS DEVIATE FROM THE CONDITIONS DETAILED HEREIN, A LICENSED ENGINEER OR REGISTERED ARCHITECT SHALL PREPARE SITE SPECIFIC DOCUMENTS TO BE USED IN CONJUNCTION WITH THIS DOCUMENT.
6. PERMIT HOLDER SHALL VERIFY THE ADEQUACY OF THE EXISTING STRUCTURE TO WITHSTAND NEW SUPERIMPOSED LOADS.
7. ALL ALUMINUM EXTRUSIONS SHALL BE 6063-T6 ALUMINUM ALLOY, UNLESS NOTED OTHERWISE.
8. TOP & BOTTOM DETAILS SHOWN MAY BE INTERCHANGED AS FIELD CONDITIONS DICTATE. PANELS MAY BE MOUNTED HORIZONTALLY WHERE APPLICABLE.
9. ALL BOLTS & WASHERS SHALL BE ZINC COATED STEEL, GALVANIZED STEEL OR STAINLESS STEEL.
10. ANCHORS SHALL BE INSTALLED IN ACCORDANCE WITH ANCHOR MANUFACTURER'S RECOMMENDATIONS. EMBEDMENT LENGTHS AND EDGE DISTANCES SHALL BE AS RECOMMENDED BY THE ANCHOR MANUFACTURER BUT IN NO INSTANCE SHALL THEY BE LESS THAN AS SHOWN ON THESE APPROVED DRAWINGS. EMBEDMENTS AND EDGE DISTANCES SHALL NOT INCLUDE STUCCO OR OTHER FINISHES.

TABLE OF CONTENTS

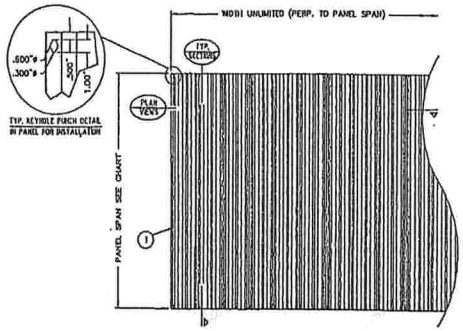

PANEL SPAN	DIRECT MOUNT DESIGN PRESSURE (PSF)	
12" – 53"	+80.0	-80.0
53" – 88"	+60.0	-60.0

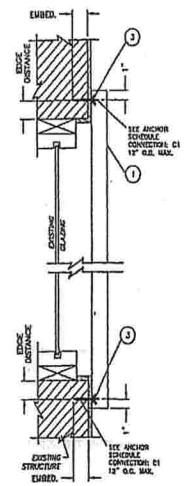

DIRECT MOUNT SECTION

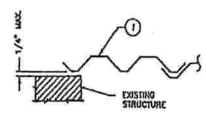

WALL MOUNT
PLAN VIEW

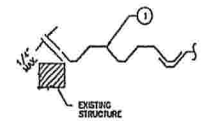

FACE MOUNT
PLAN VIEW

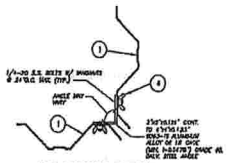

ALT CORNER DETAIL
PLAN VIEW

FLORIDA APPROVAL #FL7989-R2

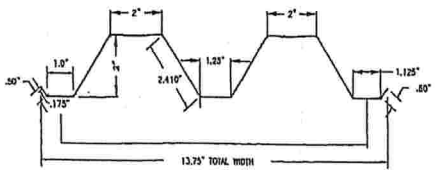

1 STEEL STORM PANEL PROFILE

ITEM	DESCRIPTION	MATERIAL
1	STEEL STORM PANEL (28 GAUGE – .018" GALV. STEEL)	STEEL
2	KEYHOLE WASHER	ALUMINUM
3	WASHERED WINGNUT	STEEL

.081" MIN. THICKNESS

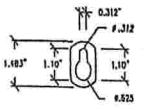

2 KEYHOLE WASHER

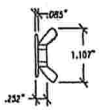

3 WING NUT

ANCHOR SCHEDULE

	ANCHOR	LOAD (lbs)	CONNECTION TYPE C1 Shear Up to 53"	CONNECTION TYPE C1 Shear Up to 88"
CONCRETE	3/8" ELCO TUFCON ED = 1.75" CL = 3" CD = 2.5" (2500 psi NWL CONC.)	60	12.0"	12.0"
		80	12.0"	
	1/4" PAKTWIST (FLUE OR FLANGE) EM = 1.25" CL = 3" CD = 2.5" (2000 psi NWL CONC.)	60	12.0"	12.0"
		80	12.0"	
	1/4"x 88 HEX HEAD DRIVANCHOR SLEEVE ANCHOR EM = 0.875" CL = 3" CD = 1.5" (2000 psi NWL CONC.)	60	12.0"	12.0"
		80	12.0"	
	1/4"x POWERS EAZE-IN & 1/4-20 SCREW EM = 0.875" CL = 3.5" CD = 2.5" (2000psi NWL CONC.)	60	12.0"	12.0"
		80	12.0"	
	1/4"x POWERS SAWZ, EAZE-IN & 1/4-20 SCREWS WITH (1/4"x 88 HEX) EM = 1.0" CL = 3.0" CD = 2.5" (2000psi NWL CONC.)	60	12.0"	12.0"
		80	12.0"	
	1/4" ALL POINTS SOLID-SET ANCHOR x 3/4" EMBED EM = 0.625" CL = 3" CD = 2" (3,000 PSI NWL CONC.)	60	12.0"	12.0"
		80	12.0"	

ANCHOR SCHEDULE

	ANCHOR	LOAD (lbs)	CONNECTION TYPE C1 Shear Up to 53"	CONNECTION TYPE C1 Shear Up to 88"
HOLLOW BLOCK	3/8" ELCO TUFCON EM = 1.75" CL = 3" CD = 2.5" (2000 psi NWL CONC.)	60	12.0"	11.0"
		80	12.0"	
	1/4" PAKTWIST (FLUE OR FLANGE) EM = 1.25" CL = 3" CD = 2.5" (2000 psi NWL CONC.)	60	12.0"	12.0"
		80	12.0"	
	1/4"x 88 HEX HEAD DRIVANCHOR SLEEVE ANCHOR EM = 0.875" CL = 3" CD = 1.5" (2000 psi NWL CONC.)	60	12.0"	12.0"
		80	12.0"	
	1/4"x POWERS EAZE-IN & 1/4-20 SCREW EM = 0.875" CL = 3.5" CD = 3.0" (2000psi NWL CONC.)	60	12.0"	8.0"
		80	12.0"	
	1/4" ALL POINTS SOLID-SET ANCHOR x 3/4" EMBED EM = 0.875" CL = 3" CD = 2" (3,000 PSI NWL CONC.)	60	12.0"	12.0"
		80	12.0"	

ANCHOR SCHEDULE

	ANCHOR	LOAD (lbs)	CONNECTION TYPE C1 Shear Up to 53"	CONNECTION TYPE C1 Shear Up to 88"
WOOD	1/4" LAG SCREW EM = 2.0" CL = 2.5" CD = 0.75"	60	12.0"	12.0"
		80	12.0"	
	1/4" PAKTWIST (FLUE OR FLANGE) EM = 1.75" CL = 3" CD = 2.5" (2000 psi NWL CONC.)	60	12.0"	12.0"
		80	12.0"	

NOTES:

1. THE DESIGN PRESSURES AND SPANS LISTED IN THE ANCHOR SCHEDULE TABLES ARE FOR DETERMINING ANCHOR SPACING ONLY. SEE SHEET 1 FOR THE DESIGN PRESSURE RATING AT VARIOUS SPANS FOR THE STORM PANELS.
2. MINIMUM EMBEDMENT SHALL BE AS NOTED IN ANCHOR SCHEDULE. MINIMUM EMBEDMENT AND EDGE DISTANCE EXCLUDES STUCCO, FOAM, BRICK, AND OTHER WALL FINISHES.
3. ANCHORS SHALL BE INSTALLED IN ACCORDANCE WITH ANCHOR MANUFACTURERS' RECOMMENDATIONS.
4. WHERE EXISTING STRUCTURE IS WOOD FRAMING, EXISTING CONDITIONS MAY VARY. FIELD VERIFY THAT FASTENERS ARE INTO ADEQUATE WOOD FRAMING MEMBERS, NOT PLYWOOD.
5. WHERE ANCHORS FASTEN TO INTERIOR FACE OF STUD FRAMING, ANCHOR SHALL BE LOCATED IN CENTER OF NOMINAL 2X4 (MIN) WOOD STUDS. WOOD STUDS SHALL BE "SOUTHERN PINE" G=0.55 OR GREATER DENSITY).
6. MACHINE SCREWS SHALL HAVE MINIMUM OF ¾" ENGAGEMENT OF THREADS IN BASE ANCHOR AND MAY HAVE EITHER A PAN HEAD, TRUSS HEAD, OR WAFER HEAD ("SIDEWALK BOLT") U.N.O.

ED = MINIMUM EDGE DISTANCE.
CL = MINIMUM SPACING OF ANCHOR CENTERLINE TO CENTERLINE.
EM = MINIMUM EMBEDMENT OF ANCHOR INTO STRUCTURAL SUBSTRATE.

REVISIONS :

Maronda Homes
4005 MARONDA WAY SANFORD, FLORIDA
(407) 321-0064

ASI BUILDING PRODUCTS
SHUTTER DETAILS
RELEASE DATE: MARCH 1, 2009

SHEET:
SHU

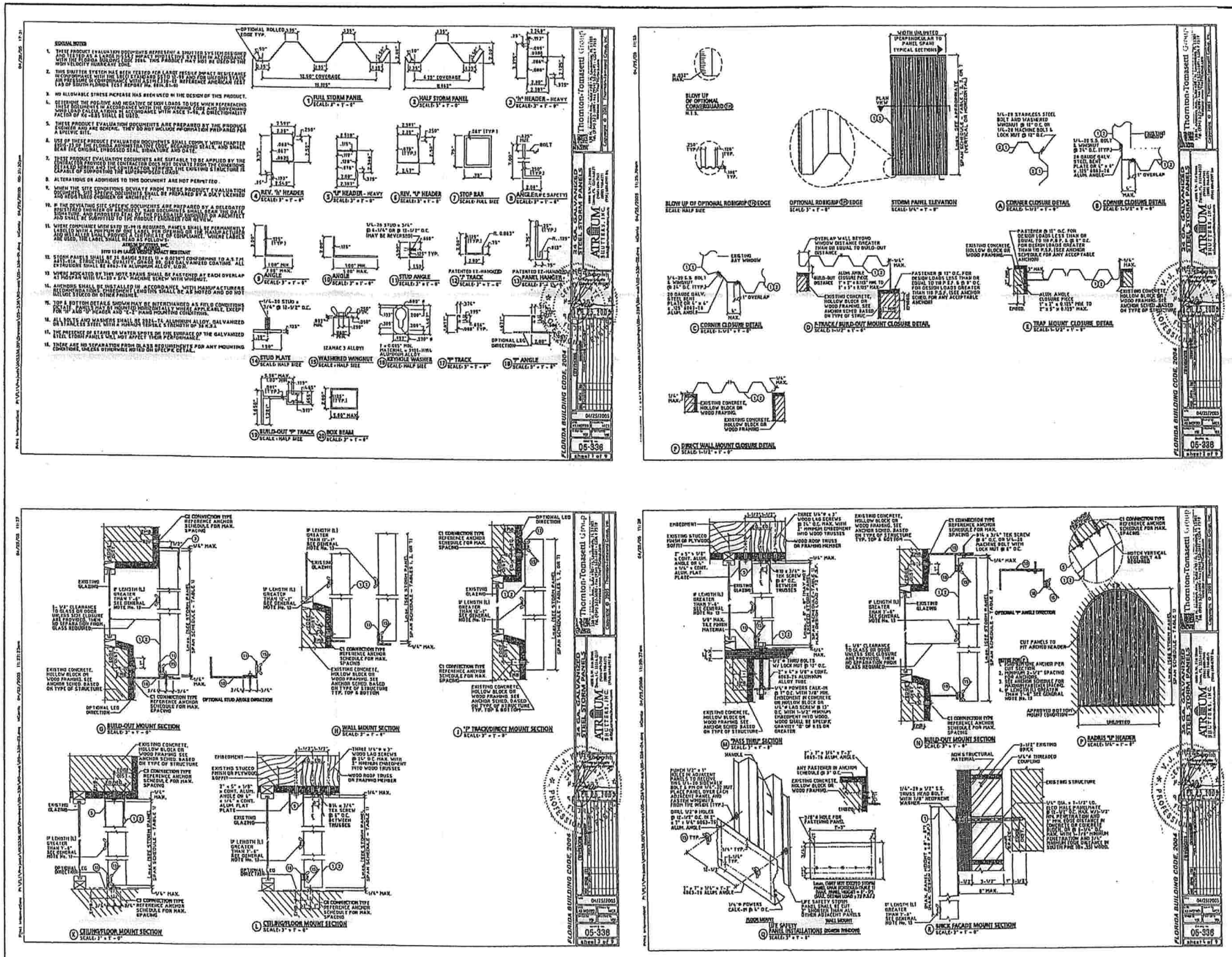

Maronda Homes

4005 MARONDA WAY SANFORD, FLORIDA (407) 321-0064

ATRIUM SHUTTERS, INC

SHUTTER DETAILS

1 of 2 PAGES

RELEASE DATE: MARCH 1, 2009

SHEET:

SHU

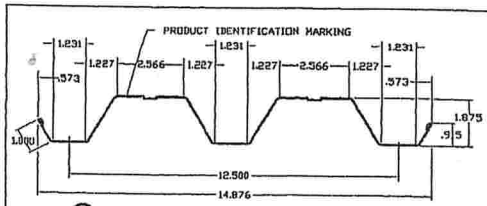

① CORRUGATED HURRICANE PANEL
MATERIAL–SEE PANEL SCHEDULE
24 GA. GALVANIZED STEEL
.050 ALUMINUM
.040 ALUMINUM

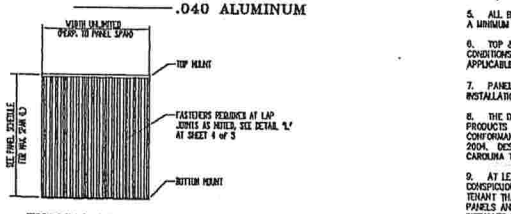

TYPICAL ELEVATION

GENERAL NOTES

1. CODE: FLORIDA BUILDING CODE 2004 AND 2003 INTERNATIONAL BUILDING CODE. THESE PRODUCTS HAVE BEEN TESTED UNDER ASTM E 1996-02 & ASTM E 1886-02. THE DESIGN APPLIES TO WIND-BORNE DEBRIS REGIONS, NOT INCLUDING HIGH VELOCITY WIND ZONES IN ACCORDANCE WITH FLORIDA BUILDING CODE 2004.

2. POSITIVE AND NEGATIVE DESIGN PRESSURE CALCULATIONS SHALL BE PERFORMED FOR SPECIFIC JOBS IN ACCORDANCE ASCE 7-98 "MINIMUM DESIGN LOADS FOR BUILDING AND OTHER STRUCTURES".

3. PANELS SHALL BE MADE OF .040 OR .050 ALUMINUM SHEET 3105-H14 ALLOY OR 24 GA. (.023 MIN.) STEEL WITH Fy = 53 ksi MIN. AFTER ROLLING, CONFORMING TO ASTM A-446-91 STRUCTURAL QUALITY STEEL, GRADE C MIN. WITH A G 60 MIN. COATING OF GALVANIZED STEEL. EXTRUSION SHOWN SHALL BE 6063-T6 ALUMINUM, U.O.N.

4. PRODUCT LABEL SHALL BE STAMPED ON PANEL, SHOWING:
KD MANUFACTURING, INC.
STATE OF FLORIDA PRODUCT APPROVAL
REFER TO ENGINEERING DRAWING 12-10
FOR PRODUCT LIMITATION.
(SEE SHEET 5 OF 5 FOR EXACT WORDING)

5. ALL BOLTS AND WASHERS SHALL BE GALVANIZED OR STAINLESS STEEL WITH A MINIMUM TENSILE STRENGTH OF 60 K.S.I.

6. TOP & BOTTOM DETAILS SHOWN MAY BE INTERCHANGED AS FIELD CONDITIONS DICTATE. PANELS MAY BE MOUNTED HORIZONTALLY WHERE APPLICABLE.

7. PANELS SHALL BE FASTENED ACCORDING TO FASTENER MANUFACTURERS' INSTALLATION SPECIFICATIONS OR AS TESTED AND SHOWN HEREIN.

8. THE DETAILS AND SPECIFICATIONS SHOWN HEREIN REPRESENT THE PRODUCTS TESTED FOR IMPACT AND UNIFORM STATIC AIR PRESSURE LOADING IN CONFORMANCE ASTM 330, ASTM E 1996-02, ASTM 1886-02, STATE OF FLORIDA 2004. DESIGN IS BASED ON AMERICAN TEST LAB NORTH, BREVARD, NORTH CAROLINA TESTING AND TEST REPORTS.

9. AT LEAST ONE WARNING NOTE PER OPENING SHALL BE PLACED IN A CONSPICUOUS LOCATION ON THE PANEL SYSTEM ADVISING THE HOME OWNER OR TENANT THAT THE PANELS WILL NOT OFFER HURRICANE PROTECTION UNLESS ALL PANELS AND FASTENERS ARE INSTALLED AS SHOWN HEREIN AND WARN INSTALLER IN THE SAME MANNER THAT HANDLING PANEL WITHOUT PROTECTIVE GLOVES COULD CAUSE INJURY, SEE PRODUCT LABEL ON SHEET 5 OF 5.

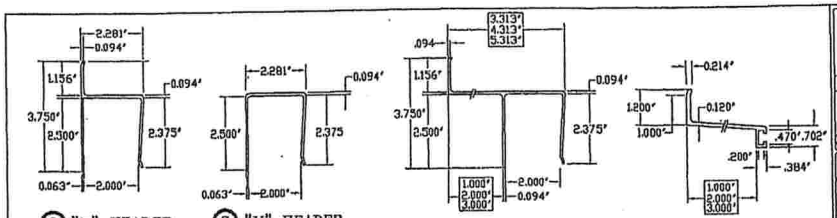

② "h" HEADER
③ "U" HEADER
④ 1" EXT."h" HEADER
⑤ 2" EXT."h" HEADER
⑥ 3" EXT."h" HEADER
⑦ 1" EXT. "F" TRACK
⑧ 2" EXT. "F" TRACK
⑨ 3" EXT. "F" TRACK

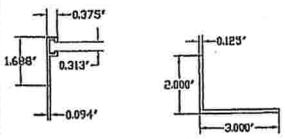

⑩ "F" TRACK
⑪ ANGLE
⑫ NOT USED
⑬ NOT USED

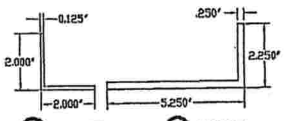

⑭ ANGLE
⑮ ANGLE

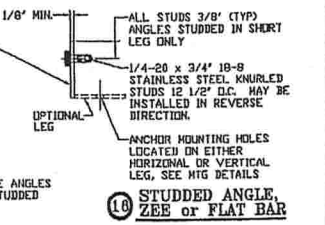

⑪ ⑫ ⑬ ⑭ ⑮
⑯ STUDDED ANGLE, ZEE or FLAT BAR

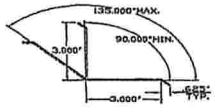

⑰ NOT USED
⑱ NOT USED
⑲ CORNER PAN
SAME METAL AS SHUTTER

1/4" ELCO TAPCON WITH 1 3/4" MINIMUM EMBEDMENT & 2" MIN EDGE DISTANCE
⑳ TAPCON

1/4" x ELCO NAIL PANELMATE PLUS WITH 1/4-20 WASHER WINGNUT. MUST HAVE 1 1/2" MIN EMBEDMENT & 2" MIN EDGE DISTANCE
㉑ PANELMATE PLUS
USE ONLY WITH INSERTS

1/4-20 HEXAGON HEAD BOLT x 1" WITH 1/4-20 WASHER WINGNUT.
㉒ SQ. HEAD BOLT
WASHER WINGNUT

1/4" LAG BOLT WITH 1 3/4" MIN THREAD EMBEDMENT IN SHEAR, PERPENDICULAR TO WOOD GRAIN & IN CENTER OF WOOD FRAMING MEMBER
㉓ LAG BOLT
WOOD FRAMING USE ONLY

1/4-20 RAWL CALK-IN WITH 7/8" EMBEDMENT, 1/4-20 PAN HEAD BOLT W/3/4" MIN HEAD & 2" MIN EDGE DISTANCE.
㉔ RAWL CALK-IN
CMU & CONCRETE USE ONLY

#14 TEK SCREW x 3/4" LONG
㉕ #14 TEK SCREW

1/4-20 SIDEWALK BOLT x 3/4" WITH 1/4-20 WASHER WINGNUT.
㉖ SIDEWALK BOLT
WASHER-WINGNUT

㉗ NOT USED

1/4-20 HEX HEAD BOLT & NUT
㉘ HEX BOLT & NUT

1/4-20 WASHER WINGNUT.
㉙ WASHER WINGNUT

HARDWARE NOTES

1. * EMBEDMENT MUST BE USED TO CALCULATE LENGTH OF FASTENER TO BE USED. *EMBEDMENT IS THE DEPTH INTO THE CONCRETE MASONRY UNIT (CMU), CONCRETE OR WOOD FRAMING MEMBER. CALCULATE LENGTH OF FASTENER BY ADDING *EMBEDMENT + ANY VENEER (STUCCO, PLYWOOD, WOOD, STONE OR BRICK) + THICKNESS OF PRODUCT BEING ATTACHED. ALWAYS ROUND UP TO THE NEAREST STANDARD LENGTH.

2. ALL FASTENERS MUST BE INSTALLED PER THE MANUFACTURERS RECOMMENDATIONS.

3. SPACING OF FASTENERS MUST COMPLY WITH THE SPECIFICATIONS OF THIS DRAWING.

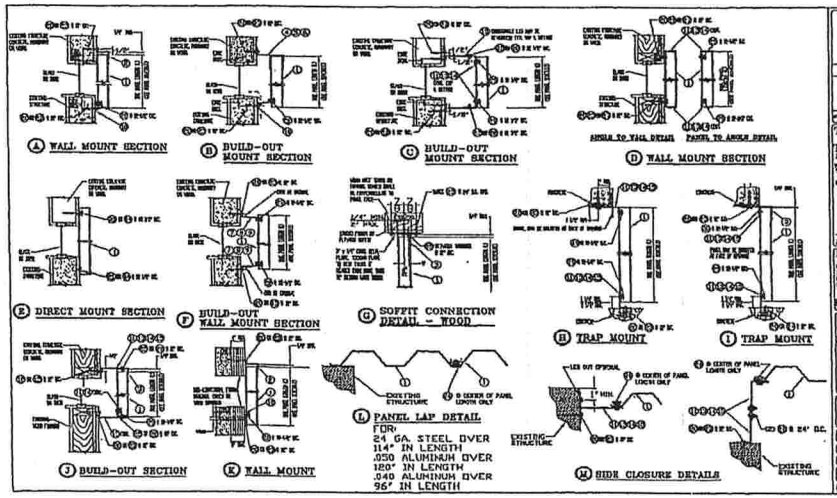

Ⓐ WALL MOUNT SECTION
Ⓑ BUILD-OUT MOUNT SECTION
Ⓒ BUILD-OUT MOUNT SECTION
Ⓓ WALL MOUNT SECTION
Ⓔ DIRECT MOUNT SECTION
Ⓕ BUILD-OUT WALL MOUNT SECTION
Ⓖ SOFFIT CONNECTION DETAIL - WOOD
Ⓗ TRAP MOUNT
Ⓘ TRAP MOUNT
Ⓙ BUILD-OUT SECTION
Ⓚ WALL MOUNT
Ⓛ PANEL LAP DETAIL
FOR:
24 GA. STEEL OVER 114" IN LENGTH
.050 ALUMINUM OVER 120" IN LENGTH
.040 ALUMINUM OVER 96" IN LENGTH
Ⓜ SIDE CLOSURE DETAILS

PRODUCT LABEL

KD MANUFACTURING, INC.–GRANT, FL 32949–PANEL TESTED TO ASTM E 1996-02 and ASTM E 1886-02 WHICH MEET 2004 FLORIDA BUILDING CODE and 2003 INTERNATIONAL BUILDING CODE WITH LIMITATIONS NOTED WITHIN APPROVED and CERTIFIED ENGINEERING DRAWING No. 10-12, DATED 12-12-2003. PANELS MUST BE INSTALLED ACCORDING TO ENGINEERING DRAWING TO GIVE FULL PROTECTION. INSTALLER MUST WEAR PROTECTIVE GLOVES WHEN HANDLING PANEL TO AVOID INJURY.

PANEL SCHEDULE NOTES:

1. ENTER PANEL SCHEDULE NEGATIVE DESIGN LOAD TO DETERMINE MAX. PANEL LENGTH. POSITIVE LOADS LESS THAN NEGATIVE LOAD ARE ACCEPTABLE.

2. FOR DESIGN LOADS BETWEEN TABULATED VALUES, USE NEXT HIGHER LOAD OR LINEAR INTERPOLATION TO DETERMINE ALLOWABLE PANEL LENGTHS.

3. USING THE CODES & TEST REPORTS CITED HEREIN WITH SPECIFIC FIELD CONDITIONS AND SPECIFIC MOUNTING METHODS MAY RESULT IN HIGHER VALUES, WHEN DETERMINED AND CERTIFIED BY A REGISTERED PROFESSIONAL ENGINEER.

4. THIS SHUTTER SYSTEM IS DESIGNED SUCH THAT THERE IS NO SEPERATION FROM THE GLASS REQUIRED PROVIDED SCHEDULED PANEL LENGTHS ARE USED.

24 GA. GALVANIZED STEEL PANEL SCHEDULE

POSITIVE DESIGN LOAD W P.S.F.	NEGATIVE DESIGN LOAD W P.S.F.	MAX. PANEL LENGTH "L" (INCHES)
25	28	144
27	29.4	138
29	30.8	132
31	32.2	126
33	33.6	120
35	35	114
37	38	108
39	41	102
41	44	96
43	47	90
45	50	84
47	53	78
49	56	72

.050 ALUMINUM PANEL SCHEDULE

POSITIVE DESIGN LOAD W P.S.F.	NEGATIVE DESIGN LOAD W P.S.F.	MAX. PANEL LENGTH "L" (INCHES)
28	28	144
31	31	138
34	34	132
37	37	126
40	40	120
43	43	114
46	46	108
49	49	102
52	52	96
55	55	90
58	58	84
61	61	78
64	64	72

.040 ALUMINUM PANEL SCHEDULE

POSITIVE DESIGN LOAD W P.S.F.	NEGATIVE DESIGN LOAD W P.S.F.	MAX. PANEL LENGTH "L" (INCHES)
47	50	96
50	56	90
53	62	84
56	68	78
70	75	72
70	76	66
70	77	60
70	78	54
70	80	48
70	81	42
70	82	36

REVISIONS

THOMAS J. TWOMEY
PROFESSIONAL ENGINEER
SEAL
DATE:
PRODUCT APPROVAL
STATE OF FLORIDA
FL2773.R5
KD MANUFACTURING, INC.
METAL STORM PANEL
12-12-03
12-10

Maronda Homes
4005 MARONDA WAY SANFORD, FLORIDA
(407) 321-0064

KD MANUFACTURING

SHUTTER DETAILS

RELEASE DATE: MARCH 1, 2009

SHEET:
SHU

ERD
Certificate of Authorization #9503

Evaluation Report A1150C.10.05
ALSCO METALS CORP, FL4459-R1
Date of Issuance: 11/02/2005
Page 2 of 3

Manufacturer: ALSCO METALS CORPORATION
3101 Poplarwood Court, Suite 200
Raleigh, NC 27615

Product Category: Panel Walls

Sub-Category: Soffits

Evaluation Method: Method 1: Products specifically addressed in the FBC through performance criteria and standardized testing or comparative rational analysis methods.

Compliance Statement: The Quad 4 aluminum soffit system, as produced by ALSCO METALS CORPORATION, has demonstrated compliance with the wind load requirements of the Florida Building Code through testing in accordance with the following Standards. Compliance is subject to the Installation Requirements and Limitations / Conditions of Use set forth herein.

Standards:

Section	Property	Standard	Year
1404.5.1	Specification	AAMA 1402	1986

References:

Entity	Reference	Standard	Date
Certified Testing Labs	CTLA-1243W1	AAMA 1402-86, Method 4	06/29/04
Certified Testing Labs	CTLA-1243W	AAMA 1402-86, Method 4	06/29/04
PFS Corp.	Quality Assurance	Inspection Contract	Current

Product / System Description: The Quad 4 is produced of nominal 0.0135-inch thick aluminum having a reported net free ventilation area of 26.1 in^2 per lineal foot and a width of 17.25-inch from the tip of the male leg to the tip of the female lock tip. This evaluation is limited to 12 and 24-inch long panels installed in standard and cantilevered applications. See Appendix 1 for component drawings and Appendix 2 for installation methods.

Quality Assurance Documentation: PFS Corporation (QUA 1680). Continued documentation comes in the form of product / literature labeling in accordance with PFS Corporation labeling requirements.

Installation Requirements:

1. The Quad 4 soffit systems shall be installed in accordance with ALSCO published requirements, subject to the minimum requirements of AAMA 1402-86 and the Limitations / Conditions of Use noted below.
2. T-nails for F-channel installation at CMU block wall shall be minimum 0.097-inch diameter of sufficient length for minimum 5/8-inch embedment.
3. Staples for F-channel, J-Channel and soffit installation shall be minimum 5/8-inch long x 3/8-inch crown staples made from 0.044 x 0.050-inch wire.
4. Nails for soffit and fascia cap installation at the fascia-side shall be 1¼-inch long, #15 gauge with an 11/16-inch diameter head.

Limitations / Conditions of Use:

1. This Evaluation Report is not for use within the HVHZ.
2. Installations shall meet the minimum ventilation requirements of FBC Section 1203.2 and AAMA 1402-86, Section 3.1.1.4.
3. All non-aluminum nails and staples shall have documented compliance with the staining criteria of AAMA 1402-86, Test Method #3.
4. Limitations relating to wind load performance are provided in Appendix 2. Use of the wind load performance worksheets is limited to an eave height less than or equal to 30 feet. For elevations exceeding this limitation, a qualified design professional shall determine design pressures in accordance with FBC Chapter 16 on a project-specific basis for comparison to wind load resistance data in accordance with AAMA 1402-86.

Certification of Independence:

1. ERD East does not have, nor does it intend to acquire or will it acquire, a financial interest in any company manufacturing or distributing products it evaluates.
2. ERD East is not owned, operated or controlled by any company manufacturing or distributing products it evaluates.
3. Robert Nieminen, P.E. does not have nor will acquire, a financial interest in any company manufacturing or distributing products for which the evaluation reports are being issued.
4. Robert Nieminen, P.E. does not have, nor will acquire, a financial interest in any other entity involved in the approval process of the product.

Respectfully submitted,

Robert Nieminen, P.E.
Florida Reg. No. 59166
General Manager, ERD East
robertn@erdeastn.com

The seal appearing on this document was authorized by Robert Nieminen, P.E. 59166 on 11/02/2005
This does not serve as an electronically signed document
Original, signed & sealed hardcopies forthcoming via courier

FLORIDA WIND ZONE COMPLIANCE WORKSHEET, h ≤ 30 ft
FBC Section 1404.5.1, AAMA 1402-86

Product Specific Data (standard installation, 12" panel, F-channel & fascia)							Wind Speed (mph) 3-second gusts							
							90	100	110	120	130	140	150	Exposure
							Required Design Pressure (psf) (magnitude)							
Product	Dim.	Wall Side F-Channel Attach	Fascia Side Soffit Attach	Fascia Cap Attach	Test Pressure (psf)	Design Pressure (psf)	19.5	24.1	29.1	34.7	40.7	47.2	54.1	B
							27.3	33.7	40.7	48.5	57.0	66.1	75.9	C
							32.4	40.0	48.3	57.6	67.6	78.4	90.0	D
ALSCO Quad 4	16" x 12"	T-Nails or Staples @ 16" o.c.	Staples @ 8" o.c. to hole board	Nails @ 48" o.c. (thru soffit)	72.41	41	OK	OK	OK	OK	OK	OK	OK	B
							OK	OK	OK	OK	OK	[redacted]	[redacted]	C
							OK	OK	OK	OK	[redacted]	[redacted]	[redacted]	D

Florida Product Appoval # FL4459-R1

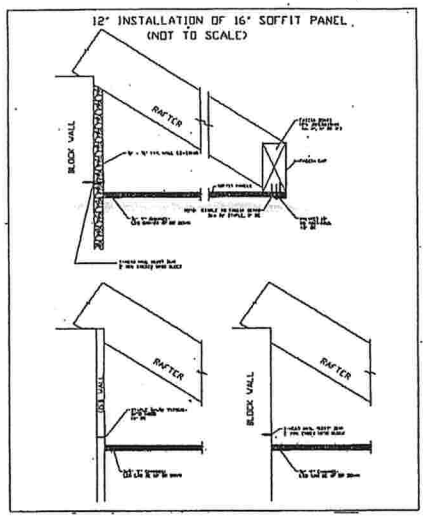

FLORIDA WIND ZONE COMPLIANCE WORKSHEET, h ≤ 30 ft
FBC Section 1404.5.1, AAMA 1402-86

Product Specific Data (cantilever installation, 24" panel, J-channel & fascia)							Wind Speed (mph) 3-second gusts							
							90	100	110	120	130	140	150	Exposure
							Required Design Pressure (psf) (magnitude)							
Product	Dim.	Wall Side J-Channel Attach	Fascia Side Soffit Attach	Fascia Cap Attach	Test Pressure (psf)	Design Pressure (psf)	19.5	24.1	29.1	34.7	40.7	47.2	54.1	B
							27.3	33.7	40.7	48.5	57.0	66.1	75.9	C
							32.4	40.0	48.3	57.6	67.6	78.4	90.0	D
ALSCO Quad 4	16" x 24"	Staples @ 16" o.c. to floor joists	Staples @ 8" o.c. to rim joist	Nails @ 48" o.c. (thru soffit)	82.04	35	OK	OK	OK	OK	OK	OK	OK	B
							OK	OK	OK	OK	[redacted]	[redacted]	[redacted]	C
							OK	OK	OK	[redacted]	[redacted]	[redacted]	[redacted]	D

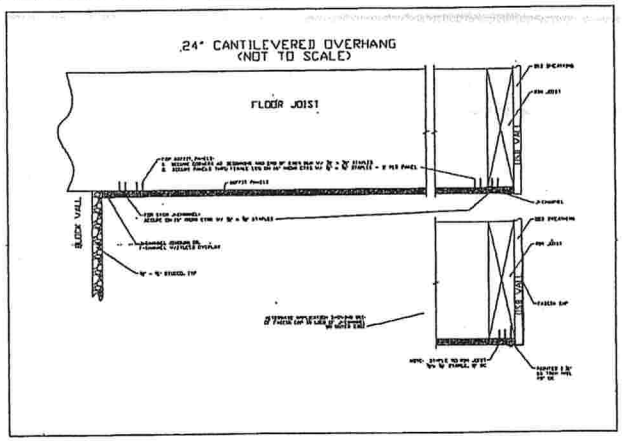

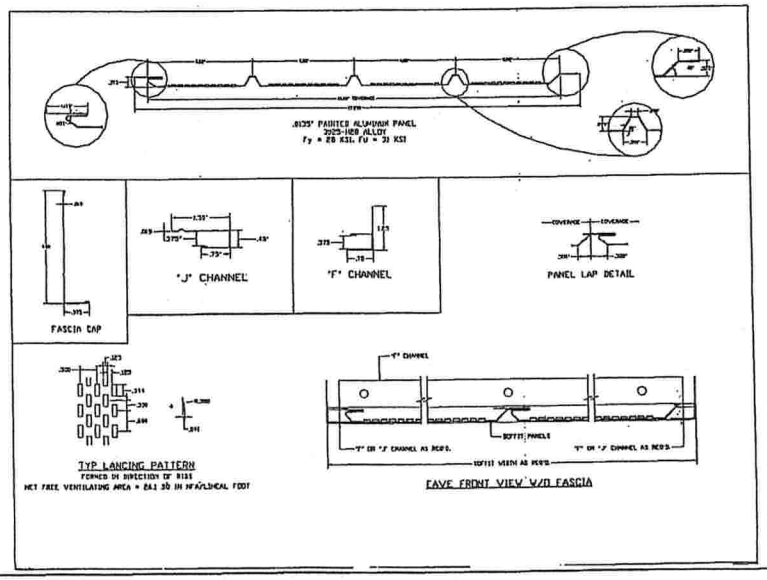

REVISIONS :
2-16-09 Updated to Code.

Maronda Homes
4005 MARONDA WAY SANFORD, FLORIDA
(407) 321-0064

SOFFIT VENTED DETAILS

RELEASE DATE: July 29, 2008

SHEET: SV

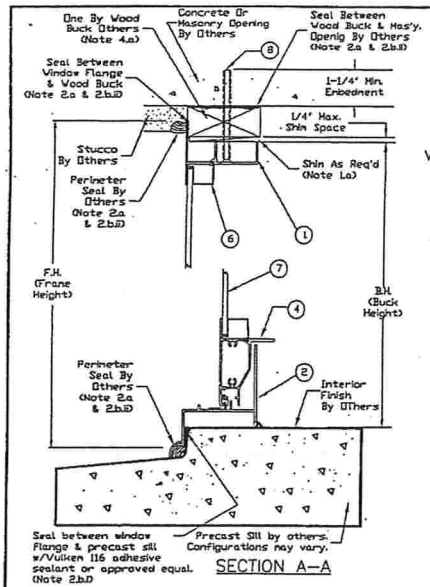

SECTION A–A

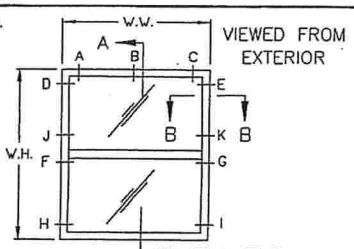

VIEWED FROM EXTERIOR

ELEVATION

PARTS LIST

1 Head - Flange Frame
2 Sill - Flange Frame
3 Jamb - Flange Frame
4 Lift Rail - Sash
5 Jamb - Sash
6 Glazing Bead
7 Glazing - See Note (B) and (C)
8 3/16" Dia. Flat Head Concrete Screw with minimum working load in shear of 180 lbs at 1 1/4" embedment. See Note (I) on Sheet 2 & Note 7 on Drawing FLEX20100.
9 #10 Flate Head Wood or Tapping Screw with a minimum embedment of 1-3/8" into "Structural Two By Buck or Framing". See Note (L) on Sheet 2 and Note 8 on Drawing FLEX20100.
10 #8 Flat Head Wood or Tapping Screw with a minimum embedment of 5/8" into the "One By Wood Buck". See Note (K) on Sheet 2 and Note 8 on Drawing FLEX20100.

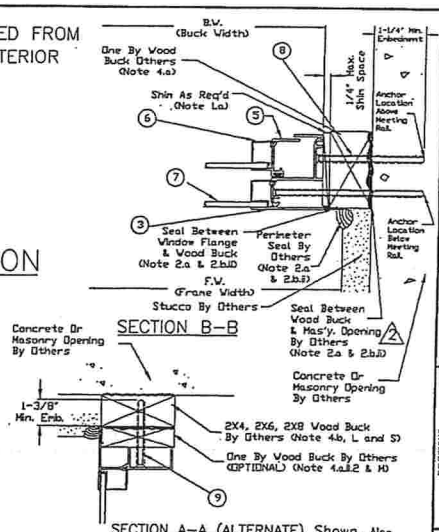

SECTION B–B

SECTION A–A (ALTERNATE) Shown. Also applicable to Section B–B for installation with two by with or w/o one by wood bucks.

GENERAL NOTES

(1 to 15) See General Notes Drawing FLEX20100, Sheet 1 & 2.
(A) Milestone Series 1000 Single Hung Aluminum Window is shown. Also applicable to Milestone Series 1500 and 2000 Single Hung Aluminum Windows.
(B) Drawing applicable to Non-Impact Resistant glazed windows.
(C) Production Glazing may differ from that tested as allowed by ANSI/AAMA/NWWDA 101/I.S. 2, 101/I.S. 2/NAFS or AAMA/WDMA/CSA 101/I.S. 2/A440 and applicable Building Code. See Note 12 and 13 on Drawing FLEX 20100 for further details.
(D) For Fastener Location & Quantities see Sheet 2 of this drawing. See Note (H) regarding deviations.
(E) Concrete screw edge distance measured from edge of concrete/masonry/block to centerline of concrete screw must meet or exceed 2 1/4". Minimum size and embedment per Parts List. See Note (H) regarding deviations.
(F) Wood screw edge distance measured from edge of wood to centerline of wood or tapping screw must meet or exceed 1". Minimum size and embedment per Parts List. See Note (H) regarding deviations.
(G) Not used.
(H) Any deviation less than the minimum requirements stated must be approved by the manufacturer or engineered by "other" Design Professional in accordance with the applicable Building Code and Product Approval.

DISCLAIMER: The purpose of this installation drawing is to present the manufacturer's recommendations for anchorage [i.e., concrete screws, wood screws, tapping screws and Vulkem Structural Adhesive (or other approved equal) as applicable] to achieve the design pressure specified on the fenestration product as required by the 2001 Florida Building Code (FBC), Section 1707.4.4, 2004 FBC-Building, Section 1714.5.4 and the 2004 FBC-Residential, Section R613.6. Recommendations regarding flashing, sealing, sealants or other joint sealant practices does not constitute a warranty either expressed or implied.

Robert J. Amoruso, P.E.
FL License No. 49752

ROBERT JULES AMORUSO LICENSE No. 49752 STATE OF FLORIDA PROFESSIONAL ENGINEER
3/8/07

Drawing No. FLEX21110
Sheet 1 of 2

Florida Extruders Int'l., Inc.
2540 Jewett Lane - Sanford, FL 32771
407-323-3300 - 407-323-3507 (fax)
www.floridaextruders.com
Florida CGA No. 5123

TITLE
Milestone Series 1000, 1500 & 2000
Non-Impact Resistant Aluminum Flange Frame Single Hung Window
Installation Drawing for Masonry Substrate with Concrete Screws

REVISIONS			
No.	Date	By	Description
0	12/27/06	RJA	Superseded FLEX0016
1	1/14/08	RJA	Revised Notes
2	3/02/07	RJA	Editorial Corrections

Date: 3/02/07
Scale: NTS
Drawn By: RJA
Checked By: JH

FASTENER LOCATION TABLE (see Elevation View)

Size Code	Buck Width	Buck Height	Concrete Screw Location Head	Concrete Screw Location Jambs
12	18 1/8	25	A, C	D, E, F, G, H, I
13	18 1/8	37 3/8	A, C	D, E, F, G, H, I
14	18 1/8	49 5/8	A, C	D, E, F, G, H, I
145	18 1/8	55 1/4	A, C	D, E, F, G, H, I
15	18 1/8	62	A, C	D, E, F, G, H, I
16	18 1/8	71	A, C	D, E, F, G, H, I, J, K
17	18 1/8	83	A, C	D, E, F, G, H, I, J, K
1H2	25 1/2	25	A, C	D, E, F, G, H, I
1H3	25 1/2	37 3/8	A, C	D, E, F, G, H, I
1H4	25 1/2	49 5/8	A, C	D, E, F, G, H, I
1H45	25 1/2	55 1/4	A, C	D, E, F, G, H, I
1H5	25 1/2	62	A, C	D, E, F, G, H, I
1H6	25 1/2	71	A, C	D, E, F, G, H, I, J, K
1H7	25 1/2	83	A, C	D, E, F, G, H, I, J, K
3H2	29 1/2	25	A, C	D, E, F, G, H, I
3H3	29 1/2	37 3/8	A, C	D, E, F, G, H, I
3H4	29 1/2	49 5/8	A, C	D, E, F, G, H, I
3H45	29 1/2	55 1/4	A, C	D, E, F, G, H, I
3H5	29 1/2	62	A, C	D, E, F, G, H, I
3H6	29 1/2	71	A, C	D, E, F, G, H, I, J, K
3H7	29 1/2	83	A, C	D, E, F, G, H, I, J, K
22	36	25	A, C	D, E, F, G, H, I
23	36	37 3/8	A, C	D, E, F, G, H, I
24	36	49 5/8	A, C	D, E, F, G, H, I
245	36	55 1/4	A, C	D, E, F, G, H, I
25	36	62	A, C	D, E, F, G, H, I
26	36	71	A, C	D, E, F, G, H, I, J, K
27	36	83	A, C	D, E, F, G, H, I, J, K
482	47	25	A, B, C	D, E, F, G, H, I
483	47	37 3/8	A, B, C	D, E, F, G, H, I
484	47	49 5/8	A, B, C	D, E, F, G, H, I
4845	47	55 1/4	A, B, C	D, E, F, G, H, I
485	47	62	A, B, C	D, E, F, G, H, I
486	47	71	A, B, C	D, E, F, G, H, I, J, K
487	47	83	A, B, C	D, E, F, G, H, I, J, K
32	52 1/8	25	A, B, C	D, E, F, G, H, I
33	52 1/8	37 3/8	A, B, C	D, E, F, G, H, I
34	52 1/8	49 5/8	A, B, C	D, E, F, G, H, I
345	52 1/8	55 1/4	A, B, C	D, E, F, G, H, I
35	52 1/8	62	A, B, C	D, E, F, G, H, I
36	52 1/8	71	A, B, C	D, E, F, G, H, I, J, K
37 (Note 1)	52 1/8	83	A, B, C	D, E, F, G, H, I, J, K

Notes 1) Only applicable to Series 2000.

FASTENER INSTALLATION INSTRUCTIONS - FLEX21110

3/16" DIA. CONCRETE SCREW WITH NON-STRUCTURAL ONE BY WOOD BUCK:

(I) Where window is installed in an opening with a non-structural one by wood buck for the head and jambs and masonry or concrete sill, installation is as follows:

- At the head and jambs, use a 3/16" diameter concrete screw of sufficient length to achieve minimum embedment of 1-1/4" into masonry or concretes. See "Parts List" on Sheet 1 of this drawing for concrete screw size, embedment and load requirements. See FLEX20100, Note 7 for additional concrete screw requirements.
- At the sill, apply a Structural Adhesive Sealant meeting the requirements of Note 2.b.i on FLEX20100 for the full length of the Sill.

(J) See fastener location table this sheet for concrete screw locations and any additional installation requirements.
(K) Any remaining factory applied installation fastener hole in the head at location "B" not used for concrete screw installation per the fastener location table shall be filled with a #8 wood screws of sufficient length to provide min. 5/8" embedment into wood buck. See "Parts List" on Sheet 1 of this drawing for wood screw size and embedment requirements. See FLEX20100, Note 8 for additional wood screw requirements.

#10 WOOD SCREW WITH STRUCTURAL TWO BY WOOD BUCK AND OPTIONAL ONE BY WOOD BUCK (SECTION A-A ALTERNATE ILLUSTRATES THIS OPTION, SIMILAR FOR SECTION B-B):

(L) Where window is installed in an opening with a structural two by wood buck for the head and jambs and a masonry or concrete sill, installation is as follows:

- At the head and jambs, use #10 wood screws of sufficient length to achieve 1-3/8" min. embedment into the two by wood buck. See "Parts List" on Sheet 1 of this drawing for wood screw size and embedment. See FLEX20100, Note 8 for additional wood screw requirements.
- At the sill, apply a Structural Adhesive Sealant meeting the requirements of Note 2.b.i on FLEX20100 for the full length of the Sill.

(M) If a two by and one by wood buck are used together (See Section A-A Alternate, similar for Section B-B), then #10 wood screws of sufficient length to achieve 1-3/8" min. embedment into the two by wood buck will be used and the one by wood buck will be secured to the two by wood buck as required in Note 4.a.ii.2 on drawing FLEX20100.
(N) #10 wood screws shall be installed at all factory applied installation fastener hole locations.
(O) Wood screws shall not be used to fasten assembly into the end grain of wood.

VIEWED FROM EXTERIOR (FASTENER LOCATIONS)

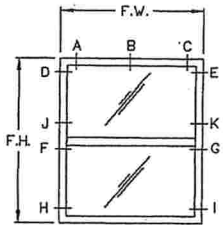

ELEVATION

DESIGN PRESSURE RATING & FBC CODE COMPLIANCE

(P) If exact window size is not listed in fastener installation table, use fastener quantity listed for next larger size.
(Q) Installations depicted in these instructions acceptable for design pressures to 70 PSF for the window sizes shown in the table. Design Pressures (D.P.) are positive and negative. Overall window assembly design pressure may be less than that shown in the fastener location table and shall be determined in accordance with Note 13 of FLEX20100.
(R) Production Glazing may differ from that tested as allowed by ANSI/AAMA/NWWDA 101/I.S. 2, 101/I.S. 2/NAFS or AAMA/WDMA/CSA 101/I.S. 2/A440 and applicable Building Code. See Note 12 and 13 on Drawing FLEX 20100 for further details.
(S) Two by wood buck and/or framing at the head and jambs to be securely fastened to transfer the load to the masonry, concrete or other structural substrate per the FBC and the engineer of record's details as applicable.
(T) See FLEX20100, Notes 10 to 15 for additional FBC Code Compliance.

Drawing No. FLEX21110
Sheet 2 of 2

Florida Extruders Int'l., Inc.
2540 Jewett Lane - Sanford, FL 32771
407-323-3300 - 407-323-3507 (fax)
www.floridaextruders.com
Florida CGA No. 5123

TITLE
Milestone Series 1000, 1500 & 2000
Non-Impact Resistant Aluminum Flange Frame Single Hung Window
Installation Drawing for Masonry Substrate with Concrete Screws

REVISIONS			
No.	Date	By	Description
0	12/27/06	RJA	Superseded FLEX0016
1	1/14/08	RJA	Revised Notes
2	3/02/07	RJA	Editorial Corrections

Date: 3/02/07
Scale: NTS
Drawn By: RJA
Checked By: JH

Florida Product Approval # FL9262.2 SINGLE HUNG

SHEET: WINb

FLORIDA EXTRUDERS
WINDOWS IN BLOCK
1 of 6
RELEASE DATE: 09/03/08

Maronda Homes
(407) 321-0064 4005 MARONDA WAY SANFORD, FLORIDA

REVISIONS :
2-16-09 Updated to Code.

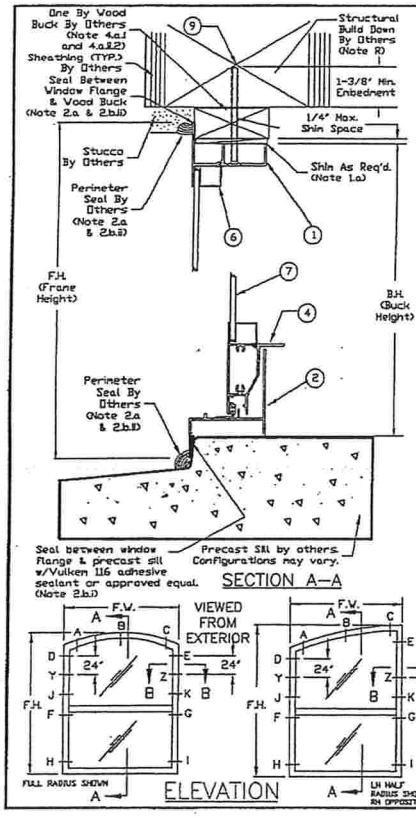

SECTION A–A

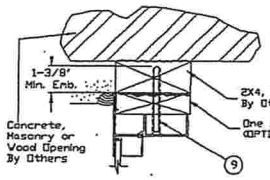

SECTION A–A (ALTERNATE) Shown. Also applicable to Section B–B for installation with two by with or w/o one by wood bucks.

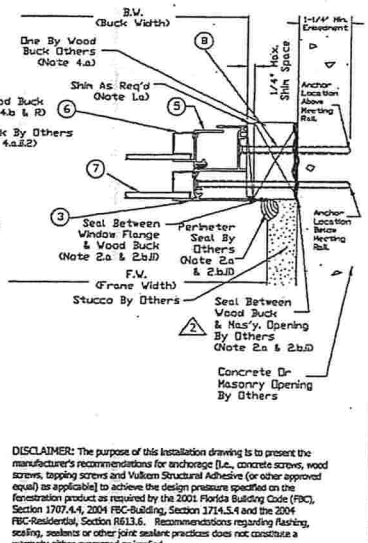

PARTS LIST

1 Head - Flange Frame
2 Sill - Flange Frame
3 Jamb - Flange Frame
4 Lift Rail - Sash
5 Jamb - Sash
6 Glazing Bead
7 Glazing - See Note (B) and (C)
8 3/16" Dia. Flat Head Concrete Screw with minimum work load in shear of 180 lbs at 1 1/4" embedment. See Note (I) on this drawing and Note 7 on Drawing FLEX20100.
9 #10 Flat Head Wood or Tapping Screw with a minimum embedment of 1-3/8" into "Structural Two By Buck or Framing". See Note (K) on this drawing and Note 8 on Drawing FLEX20100. 2

DISCLAIMER: The purpose of this installation drawing is to present the manufacturer's recommendations for anchorage [i.e., concrete screws, wood screws, tapping screws and Vulkem Structural Adhesive (or other approved equal) as applicable] to achieve the design pressure specified on the fenestration product as required by the 2001 Florida Building Code (FBC), Section 1707.4.4, 2004 FBC-Building, Section 1714.5.4 and the 2004 FBC-Residential, Section R613.6. Recommendations regarding flashing, sealing, sealants or other joint sealant practices does not constitute a warranty either expressed or implied.

ELEVATION

GENERAL NOTES

(1 to 15) See General Notes Drawing FLEX20100, Sheet 1 & 2.
(A) Milestone Series 1000 Single Hung Radius Head Aluminum Window is shown. Also applicable to Milestone Series 1500 and 2000 Single Hung Radius Head Aluminum Windows.
(B) Drawing applicable to Non-Impact Resistant glazed windows.
(C) Production Glazing may differ from that tested as allowed by ANSI/AAMA/NWWDA 101/I.S. 2, 101/I.S. 2/NAFS or AAMA/WDMA/CSA 101/I.S. 2/A440and applicable Building Code. See Note 12 and 13 on Drawing FLEX 20100 for further details.
(D) For Fastener Location & Quantities see Sheet 1 & 2 of this drawing respectively. See Note (H) regarding deviations.
(E) Concrete screw edge distance measured from edge of concrete/masonry/block to centerline of concrete screw must meet or exceed 2 1/4". Minimum size and embedment per Parts List. See Note (H) regarding deviations.
(F) Wood or tapping screw edge distance measured from edge of wood to centerline of wood or tapping screw must meet or exceed 1". Minimum size and embedment per Parts List. See Note (H) regarding deviations.
(G) Not used.
(H) Any deviation less than the minimum requirements stated must be approved by the manufacturer or engineered by "other" Design Professional in accordance with the applicable Building Code and Product Approval.

Robert J. Amonuso, P.E.
FL License No. 49752

ROBERT JAMES AMONUSO LICENSE No. 49752 STATE OF FLORIDA PROFESSIONAL ENGINEER

3/2/07

Drawing No. FLEX22110
Sheet 1 of 2

Florida Extruders Int'l., Inc.
2540 Jewett Lane - Sanford, FL 32771
407-323-3300 - 407-322-3597 (fax)
www.floridaextruders.com
Florida COA No. 9235

TITLE: Milestone Series 1000, 1500 & 2000 Non-Impact Resistant Aluminum Flange Frame Radius Head SH Window Installation Dwg. for Masonry/Wood Substrate with Concrete/Wood Screws

REVISIONS			
No.	Date	By	Description
0	12/7/06	RJA	Supersedes FL9260A0
1	11/14/06	RJA	Revised Anchorage
2	3/02/07	RJA	Editorial Corrections

Date: 11/14/06
Scale: NTS
Drawn By: RJA
Checked By: JH

FASTENER LOCATION TABLE (see Elevation View, Sheet 1)

Series	Size Code	Frame Width and Height: Width	Height (Full Radius)	Height (Half Radius)	Fastener Screw Location: Head (No. 10 WS)	Jambs (No. 10 WS or Concrete Screw)
1000/1500/2000	12	19 1/8	26 13/16	28 5/16	A, B, C	D, E, F, G, H, I
1000/1500/2000	13	19 1/8	38 3/16	40 11/16	A, B, C	D, E, F, G, H, I
1000/1500/2000	14	19 1/8	51 7/16	52 15/16	A, B, C	D, E, F, G, H, I
1000/1500/2000	145	19 1/8	57 1/16	58 9/16	A, B, C	D, E, F, G, H, I
1000/1500/2000	15	19 1/8	63 13/16	65 5/16	A, B, C	D, E, F, G, H, I
1000/1500/2000	16	19 1/8	72 13/16	74 5/16	A, B, C	D, E, F, G, H, I, J, K
1000/1500	17	19 1/8	84	84	A, B, C	D, E, F, G, H, I, J, K
2000	17	19 1/8	90	90	5/16	A, B, C	D, E, F, G, H, I, J, K, Y, Z
1000/1500/2000	1H2	28 1/2	27 7/16	29 9/16	A, B, C	D, E, F, G, H, I
1000/1500/2000	1H3	28 1/2	39 13/16	41 15/16	A, B, C	D, E, F, G, H, I
1000/1500/2000	1H4	28 1/2	52 1/16	54 3/16	A, B, C	D, E, F, G, H, I
1000/1500/2000	1H45	28 1/2	57 11/16	59 13/16	A, B, C	D, E, F, G, H, I
1000/1500/2000	1H5	28 1/2	64 7/16	66 9/16	A, B, C	D, E, F, G, H, I
1000/1500/2000	1H6	28 1/2	73 7/16	75 9/16	A, B, C	D, E, F, G, H, I, J, K
1000/1500	1H7	28 1/2	84	84	A, B, C	D, E, F, G, H, I, J, K
2000	1H7	28 1/2	90	90	9/16	A, B, C	D, E, F, G, H, I, J, K, Y, Z
1000/1500/2000	3H2	30 1/2	27 7/16	30 11/16	A, B, C	D, E, F, G, H, I
1000/1500/2000	3H3	30 1/2	40 13/16	42 2/3	A, B, C	D, E, F, G, H, I
1000/1500/2000	3H4	30 1/2	52 7/16	54 41/48	A, B, C	D, E, F, G, H, I
1000/1500/2000	3H45	30 1/2	58 1/16	60 23/48	A, B, C	D, E, F, G, H, I
1000/1500/2000	3H5	30 1/2	64 7/16	67 11/48	A, B, C	D, E, F, G, H, I
1000/1500/2000	3H6	30 1/2	73 7/16	76 11/48	A, B, C	D, E, F, G, H, I, J, K
1000/1500	3H7	30 1/2	84 1/16	83 47/48	A, B, C	D, E, F, G, H, I, J, K
2000	3H7	30 1/2	90 1/16	89 47/48	A, B, C	D, E, F, G, H, I, J, K, Y, Z
1000/1500/2000	22	37	28 5/16	31 5/16	A, B, C	D, E, F, G, H, I
1000/1500/2000	23	37	40 11/16	43 11/16	A, B, C	D, E, F, G, H, I
1000/1500/2000	24	37	53 15/16	55 15/16	A, B, C	D, E, F, G, H, I
1000/1500/2000	245	37	58 9/16	61 9/16	A, B, C	D, E, F, G, H, I
1000/1500/2000	25	37	65 5/16	68 5/16	A, B, C	D, E, F, G, H, I
1000/1500/2000	26	37	74 5/16	77 5/16	A, B, C	D, E, F, G, H, I, J, K
1000/1500	27	37	84	84	A, B, C	D, E, F, G, H, I, J, K
2000	27	37	90	90 5/16	A, B, C	D, E, F, G, H, I, J, K, Y, Z
1000/1500/2000	482	48	28 7/32	33 7/48	A, B, C	D, E, F, G, H, I
1000/1500/2000	483	48	41 19/32	43 25/48	A, B, C	D, E, F, G, H, I
1000/1500/2000	484	48	53 27/32	57 37/48	A, B, C	D, E, F, G, H, I
1000/1500/2000	4845	48	59 15/32	63 19/48	A, B, C	D, E, F, G, H, I
1000/1500/2000	485	48	66 7/32	70 7/48	A, B, C	D, E, F, G, H, I
1000/1500/2000	486	48	75 7/32	79 7/48	A, B, C	D, E, F, G, H, I, J, K
1000/1500	487	48	84	84 1/32	A, B, C	D, E, F, G, H, I, J, K
2000	487	48	90	90 1/32	A, B, C	D, E, F, G, H, I, J, K, Y, Z
1000/1500/2000	32	53 1/8	29 21/32	34	A, B, C	D, E, F, G, H, I
1000/1500/2000	33	53 1/8	42 1/32	46 3/8	A, B, C	D, E, F, G, H, I
1000/1500/2000	34	53 1/8	54 9/32	58 5/8	A, B, C	D, E, F, G, H, I
1000/1500/2000	345	53 1/8	59 29/32	64 1/4	A, B, C	D, E, F, G, H, I
1000/1500/2000	35	53 1/8	66 21/32	71	A, B, C	D, E, F, G, H, I
1000/1500/2000	36	53 1/8	75 21/32	80	A, B, C	D, E, F, G, H, I, J, K
1000/1500	n/a	n/a	n/a	n/a	n/a	n/a
2000	37	53 1/8	90	90	A, B, C	D, E, F, G, H, I, J, K, Y, Z

FASTENER INSTALLATION INSTRUCTIONS - FLEX22110

3/16" DIA. CONCRETE SCREW WITH NON-STRUCTURAL ONE BY WOOD BUCK:

(I) Where window is installed in an opening with a non-structural one by wood buck for the jambs and masonry or concrete sill, installation is as follows:
- (1) At the jambs, use a 3/16" diameter concrete screw of sufficient length to achieve minimum embedment of 1-1/4" into masonry or concrete. See "Parts List" on Sheet 1 of this drawing for concrete screw size, embedment and load requirements. See FLEX20100, Note 7 for additional concrete screw requirements.
- (2) At the sill, apply a Structural Adhesive Sealant for the full length of the Sill meeting the requirements of Note 2.b.i on FLEX 20100.

(J) See fastener installation table on this sheet for concrete screw locations in jambs and additional installation requirements.

#10 WOOD SCREW WITH (1) STRUCTURAL BUILD-DOWN FOR RADIUS HEAD, (2) OPTIONAL STRUCTURAL TWO BY WOOD BUCK AND (3) OPTIONAL ONE BY WOOD BUCK AT HEAD AND/OR JAMBS (SECTION A-A ALTERNATE ILLUSTRATES THIS OPTION FOR HEAD, SIMILAR FOR SECTION B-B AT JAMB):

(K) Where window is installed in an opening with a (1) structural build-down for radius head, (2) optional structural two by wood buck and (3) optional one by wood buck at head and/or jambs, installation is as follows:
- (1) For structural build-down at the head and/or two by wood buck at the head and/or jambs as applicable, use #10 wood screws of sufficient length to achieve 1-3/8" min. embedment into the two by wood buck and/or or structural build-down. See "Parts List" on Sheet 1 of this drawing for wood screw size and embedment. See FLEX20100, Note 8 for additional wood screw requirements.
- (2) For one by wood buck used in conjunction with a structural two by wood buck at the head and/or jambs as applicable use #10 wood screws of sufficient length to achieve 1-3/8" min. embedment into the two by wood buck. See "Parts List" on Sheet 1 of this drawing for wood screw size and embedment. See FLEX20100, Note 8 for additional wood screw requirements.
- (3) At the sill, apply a Structural Adhesive Sealant for the full length of the Sill meeting the requirements of Note 2.b.i on FLEX 20100.

(L) If a two by and one by wood buck are used together (see Section A-A Alternate, similar for Section B-B), then #10 wood screws of sufficient length to achieve 1-3/8" min. embedment into the two by wood buck will be used and the one by wood buck will be secured to the two by wood buck as required in Note 4.a.ii.2 on drawing FLEX20100.
(M) #10 wood screws shall be installed at all factory applied installation fastener hole locations where applicable.
(N) Wood screws shall not be used to fasten assembly into the end grain of wood.

DESIGN PRESSURE RATING & FBC CODE COMPLIANCE

(O) If exact window size is not listed in fastener installation table, use fastener locations listed for next larger size.
(P) Installations depicted in these instructions acceptable for design pressures to 70 PSF for the window sizes shown in the chart. Design Pressures (D.P.) are positive and negative. Overall window assembly design pressure may be less than that shown in the fastener quantity table and shall be determined in accordance with Note 13 of FLEX20100.
(Q) Production Glazing may differ from that tested as allowed by ANSI/AAMA/NWWDA 101/I.S. 2, 101/I.S. 2/NAFS or AAMA/WDMA/CSA 101/I.S. 2/A440 and applicable Building Code. See Note 12 and 13 on Drawing FLEX 20100 for further details.
(R) Structural build-down at head, two by wood buck and/or framing at the head and jambs to be securely fastened to transfer the load to the masonry, concrete or other structural substrate per the FBC and the engineer of record's details as applicable.
(S) See FLEX20100, Notes 10 to 15 for additional FBC Code Compliance.

FASTENER LOCATION TABLE NOTES:
1. This chart and Notes I, J, K.1, L, M and N for use when Radius Head Flange Window is installed in opening with the following attributes:
   a. Wood Structural Build–Down at Head, and
   b. Masonry/Concrete Substrate and One–By Wood Buck at Jambs.
2. Install Radius Head Flange Window using #10 Wood Screws with a 1–3/8" minimum embedment into the structural wood substrate in accordance with Notes K to N in an opening with the following attributes.
   a. Wood Structural Build–Down at Head.
   b. Optional Structural Two By Buck is installed at the head or jambs, and
   c. Optional One By Wood Buck is installed at the head or jambs.
3. See Note R regarding structural framing requirements.
4. See Sheet 1 for Fastener Location Diagrams.
5. Fasteners Y & Z applicable to Series 2000 Size 37 Only. 3/16" Hole must be drilled in field.

Drawing No. FLEX22110
Sheet 2 of 2

Florida Extruders Int'l., Inc.
2540 Jewett Lane - Sanford, FL 32771
407-323-3300 - 407-322-3597 (fax)
www.floridaextruders.com
Florida COA No. 9235

TITLE: Milestone Series 1000, 1500 & 2000 Non-Impact Resistant Aluminum Flange Frame Radius Head SH Window Installation Dwg. for Masonry/Wood Substrate with Concrete/Wood Screws

REVISIONS			
No.	Date	By	Description
0	12/7/06	RJA	Supersedes FL9260A0
1	11/14/06	RJA	Revised Anchorage
2	3/02/07	RJA	Editorial Corrections

Date: 3/02/07
Scale: NTS
Drawn By: RJA
Checked By: JH

Florida Product Approval # FL9262.2 SINGLE HUNG

SHEET: WIN6

FLORIDA EXTRUDERS
WINDOWS IN BLOCK
2 of 6
RELEASE DATE: 09/03/08

Maronda Homes
(407) 321-0064 4005 MARONDA WAY SANFORD, FLORIDA

REVISIONS :
2-16-09 Updated to Code.

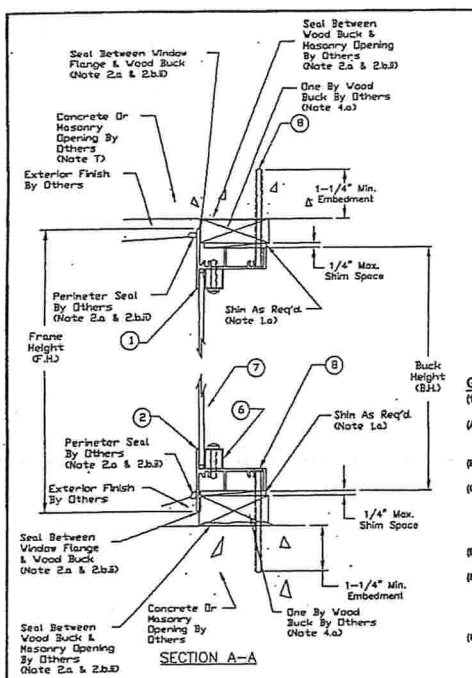

SECTION A–A

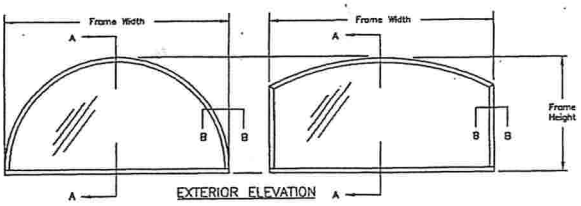

EXTERIOR ELEVATION

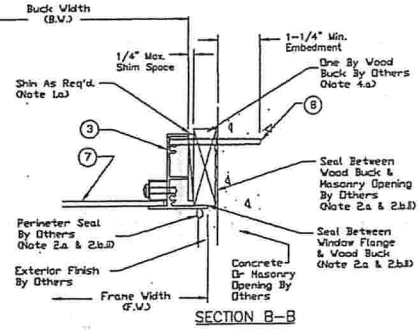

SECTION B–B

DISCLAIMER: The purpose of this installation drawing is to present the manufacturer's recommendations for anchorage [i.e., concrete screws, wood screws, and tapping screws] to achieve the design pressure specified on the fenestration product as required by the 2001 Florida Building Code (FBC), Section 1707.4.4, 2004 FBC-Building, Section 1714.5.4 and the 2004 FBC-Residential, Section R613.6. Recommendations regarding flashing, sealing, sealants or other joint sealant practices does not constitute a warranty either expressed or implied.

GENERAL NOTES

(1 to 15) See General Notes Drawing FLEX20100, Sheet 1 & 2.

(A) Milestone Series 1000 Designer Fixed Aluminum Window is shown. Also applicable to Series 2000 Designer Fixed Aluminum Windows.

(B) Drawing applicable to Non-Impact Resistant glazed windows.

(C) Production Glazing may differ from that tested as allowed by ANSI/AAMA/NWWDA 101/I.S. 2, 101/I.S. 2/NAFS or AAMA/WDMA/CSA 101/I.S. 2/A440 and applicable Building Code. See Note 12 and 13 on Drawing FLEX 20100 for further details.

(D) For Fastener Location & Quantities see Sheet 2 of this drawing. See Note (H) regarding deviations.

(E) Concrete screw edge distance measured from edge of concrete/masonry/block to centerline of concrete screw must meet or exceed 2 1/4". Minimum size and embedment per Parts List. See Note (H) regarding deviations.

(F) Wood or tapping screw edge distance measured from edge of wood to centerline of wood or tapping screw must meet or exceed 1". Minimum size and embedment per Parts List. See Note (H) regarding deviations.

(G) All field supplied holes in the frame (if required) will be 3/16" in diameter for 3/16" concrete screws and #10 wood screws.

(H) Any deviation less than the minimum requirements stated must be approved by the manufacturer or engineered by "other" Design Professional in accordance with the applicable Building Code and Product Approval.

PARTS LIST

1 Head - Flange Frame
2 Sill - Flange Frame
3 Jamb - Flange Frame
4 Not Used
5 Not Used
6 Glazing Bead
7 Glazing - See Note (B) and (C)
8 3/16" Dia. Flat Head Concrete Screw with minimum working load in shear of 180 lbs at 1 1/4" embedment. See Note (I) on Sheet 2 and Note 7 on Drawing FLEX20100.
9 #10 Flat Head Wood or Tapping Screw with a minimum embedment of 1-3/8" into "Structural Two By Buck or Framing". See Note (K) on Sheet 2 and Note 8 on Drawing FLEX20100.

Florida Extruders Int'l., Inc.
2540 Jewett Lane - Sanford, FL 32771
407-323-3300 - 407-322-3507 (fax)
www.floridaextruders.com
Florida COA No. 9235

TITLE: Milestone Series 1000 and 2000 Non-Impact Resistant Aluminum Frame Designer Fixed Window Installation Drawing for Masonry Substrate & Concrete Header

No.	Date	By	Description
0	12/27/06	RJA	Supersedes FLEX0035
1	11/14/06	RJA	Revised Anchorage.
2	1/9/07	RJA	Revised per Florida Review.

Date: 1/9/07
Scale: NTS
Drawn By: RJA
Checked By: JH

Robert J. Amoruso, P.E.
FL License No. 49732

ROBERT JULES AMORUSO LICENSE No. 49732 STATE OF FLORIDA PROFESSIONAL ENGINEER

Drawing No. FLEX28110
Sheet 1 of 2

FASTENER INSTALLATION INSTRUCTIONS - FLEX28110

3/16" DIA. CONCRETE SCREW WITH NON-STRUCTURAL ONE BY WOOD BUCK AND CONCRETE BUILD-DOWN:

(I) Where window is installed in an opening with a non-structural one by wood buck for the head, sill and jambs, use a 3/16" diameter concrete screw of sufficient length to achieve minimum embedment of 1-1/4" into masonry or concrete. See "Parts List" on Sheet 1 of this drawing for concrete screw size, embedment and load requirements. See FLEX20100, Note 7 for additional concrete screw requirements.

(J) Fastener spacing shall be per Notes (N), (P) and (Q) below.

#10 WOOD SCREW WITH STRUCTURAL TWO BY WOOD BUCK AND CONCRETE BUILD-DOWN. USED WHEN TWO BY BUCK EMPLOYED IN LIEU OF ONE BY BUCK (THIS CONFIGURATION NOT SHOWN):

(K) Where window is installed in an opening with a structural two by wood buck for the head, sill and jambs, use #10 wood screws of sufficient length to achieve 1-3/8" min. embedment into the two by wood buck. See "Parts List" on Sheet 1 of this drawing for wood screw size and embedment. See FLEX20100, Note 8 for additional wood screw requirements.

(L) Wood screws shall not be used to fasten assembly into the end grain of wood.

(M) Fastener spacing shall be per Notes (O), (P) and (Q) below.

FASTENER SPACING (See Elevation View on this Sheet):

(N) Concrete screw spacing shall be as follows:
- 5" maximum from each corner of head, sill or jambs,
- evenly spaced between corner anchors but not exceeding 15" o.c. spacing in head, sill or jambs of quarter-circle, quarter-circle arch and half-fan configurations, or
- evenly spaced between corner anchors but not exceeding 18" o.c. spacing in head, sill or jambs of all other configurations not mentioned above, and
- tolerance is +/- 1", and
- this tolerance is applicable to the evenly spaced distance.
- Corner distance measured from tip of frame. 2

(O) #10 wood screw spacing shall be as follows:
- 5" maximum from each corner of head, sill or jambs,
- evenly spaced between corner anchors but not exceeding 12" o.c. spacing in head, sill or jambs for the following configurations,
  - o eyebrow
  - o half-circle arch
  - o half-eyebrow
  - o octagon
  - o fan
  - o parabola
  - o full-circle
  - o half-circle
  - o triangle
  - o trapezoid
  - o oval
- evenly spaced between corner anchors but not exceeding 9" o.c. spacing in head, sill or jambs for the following configurations,
  - o quarter-circle
  - o quarter-circle arch
  - o half-fan
- tolerance is +/- 1", and
- this tolerance is applicable to the evenly spaced distance. 2
- Corner distance measured from tip of frame.

(P) Spacing in Note (N) and (O) above based on the use of either a concrete screw or #10 wood screw as required for securing the window frame into the substrate as follows (see illustration this sheet).
- Concrete screw into concrete or masonry using a non-structural One By Wood Buck.
- #10 wood screw into a Two By Wood Buck structurally attached to concrete or masonry substrate.

(Q) If configuration requires combination of concrete screw and #10 wood screw in either a head, sill or jamb, the lower of the maximum spacings above shall be used.

DESIGN PRESSURE RATING & FBC CODE COMPLIANCE

(R) Installations depicted in these instructions acceptable for design pressures to 70 PSF. Design Pressures (D.P.) are positive and negative. Overall window assembly design pressure may be less than that shown in the fastener quantity table and shall be determined in accordance with Note 13 of FLEX20100.

(S) Production Glazing may differ from that tested as allowed by ANSI/AAMA/NWWDA 101/I.S. 2, 101/I.S. 2/NAFS or AAMA/WDMA/CSA 101/I.S. 2/A440 and applicable Building Code. See Note 12 and 13 on Drawing FLEX 20100 for further details.

(T) Concrete Header at head and/or two by wood buck and/or framing at the head, sill and jambs to be securely fastened to transfer the load to the masonry, concrete or other structural substrate per the FBC and the engineer of record's details as applicable.

(U) See FLEX20100, Notes 10 to 15 for additional FBC Code Compliance.

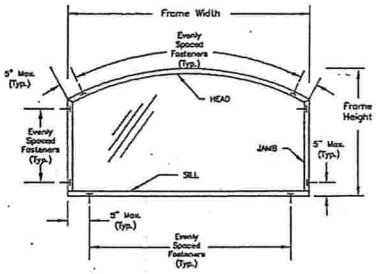

EXTERIOR ELEVATION

FASTENER SPACING ILLUSTRATION
EYEBROW ARCH DESIGNER WINDOW SHOWN AS EXAMPLE

EXAMPLE:

HEAD (CURVED PORTION) SECURED TO CONCRETE HEADER, JAMBS OR SILL SECURED TO CMU AND CAST–SILL RESPECTIVELY WITH ONE BY BUCK

USE 3/16" DIA. CONCRETE SCREWS AT 18" O.C. SPACING BETWEEN ANCHORS AND SPACED 5" MAXIMUM FROM CORNERS.

– or –

HEAD (CURVED PORTION), JAMBS OR SILL SECURED TO STRUCTURAL TWO BY BUCK (ATTACHED TO CONCRETE HEADER, JAMBS OR SILL)

USE #10 WOOD SCREWS AT 12" O.C. SPACING BETWEEN FASTENERS AND SPACED 5" MAXIMUM FROM CORNERS. (NOTE: 12" SPACING FOR EXAMPLE EYEBROW APPLICATION. OTHER APPLICATIONS MAY REQUIRE 9" SPACING PER NOTE (O))

Florida Extruders Int'l., Inc.
2540 Jewett Lane - Sanford, FL 32771
407-323-3300 - 407-322-3507 (fax)
www.floridaextruders.com
Florida COA No. 9235

TITLE: Milestone Series 1000 and 2000 Non-Impact Resistant Aluminum Frame Designer Fixed Window Installation Drawing for Masonry Substrate & Concrete Header

No.	Date	By	Description
0	12/27/06	RJA	Supersedes FLEX0035
1	11/14/06	RJA	Revised Anchorage.
2	1/9/07	RJA	Revised per Florida Review.

Date: 1/9/07
Scale: NTS
Drawn By: RJA
Checked By: JH

Drawing No. FLEX28110
Sheet 2 of 2

Florida Product Approval # FL9242.2

FIXED

SHEET: WINb

FLORIDA EXTRUDERS
WINDOWS IN BLOCK
3 of 6
RELEASE DATE: 09/03/08

Maronda Homes
(407) 321-0064 4005 MARONDA WAY SANFORD, FLORIDA

REVISIONS :
2-16-09 Updated to Code.

FASTENER QUANTITIES TABLE (See Elevation View which depicts for illustrative purposes only maximum number of fasteners in Head & Jambs

Series 1000 Horizontal Slider OX - OX Configuration				
Size	Frame (1)		Fastener Quantities (2)	
Code	Width	Height	Head	Jambs
1H2	28 1/2	28	4	2
1H3	28 1/2	38 3/8	4	2
1H4	28 1/2	50 5/8	4	3
1H4S	28 1/2	55 1/4	4	4
1H5	28 1/2	63	4	4
1H6	28 1/2	72	4	4
3H2	30 1/2	28	4	2
3H3	30 1/2	38 3/8	4	2
3H4	30 1/2	50 5/8	4	3
3H4S	30 1/2	55 1/4	4	4
3H5	30 1/2	63	4	4
3H6	30 1/2	72	4	4
22	37	28	4	2
23	37	38 3/8	4	2
24	37	50 5/8	4	3
24S	37	55 1/4	4	4
25	37	63	4	4
26	37	72	4	4
482	48	28	4	2
483	48	38 3/8	4	2
484	48	50 5/8	4	3
484S	48	55 1/4	4	4
485	48	63	4	4
486	48	72	4	4
32	53 1/8	28	4	2
33	53 1/8	38 3/8	4	2
34	53 1/8	50 5/8	4	3
34S	53 1/8	55 1/4	4	4
35	53 1/8	63	4	4
36	53 1/8	72	4	4

Series 1000 Horizontal Slider OX - OX Configuration				
Size	Frame (1)		Fastener Quantities (2)	
Code	Width	Height	Head	Jambs
D22	74	28	4	2
D23	74	38 3/8	4	2
D24	74	50 5/8	4	3
D24S	74	55 1/4	4	4
D25	74	63	4	4
D26	74	72	4	4
2020	24	24	4	2
2030	24	36	4	2
2040	24	48	4	3
2048	24	54	4	4
2050	24	60	4	4
2060	24	72	4	4
3020	36	24	4	2
3030	36	36	4	2
3040	36	48	4	3
3048	36	54	4	4
3050	36	60	4	4
3060	36	72	4	4
4020	48	24	4	2
4030	48	36	4	2
4040	48	48	4	3
4048	48	54	4	4
4050	48	60	4	4
4060	48	72	4	4
4820	54	24	4	2
4830	54	36	4	2
4848	54	48	4	3
4848	54	54	4	4
4850	54	60	4	4
4860	54	72	4	4
5020	60	24	4	2
5030	60	36	4	2
5040	60	48	4	3
5048	60	54	4	4
5050	60	60	4	4
5060	60	72	4	4
5820	66	24	4	2
5830	66	36	4	2
5840	66	48	4	3
5848	66	54	4	4
5850	66	60	4	4
5860	66	72	4	4
6020	72	24	4	2
6030	72	36	4	2
6040	72	48	4	3
6048	72	54	4	4
6050	72	60	4	4
6060	72	72	4	4

Series 1000 Horizontal Slider XOX Configuration				
Size	Frame (1)		Fastener Quantities (2)	
Code	Width	Height	Head	Jambs
D22	74	28	6	2
D23	74	38 3/8	6	2
D24	74	50 5/8	6	3
D25	74	63	6	4
D26	74	72	6	4
D32	109 1/4	28	6	2
D33	109 1/4	38 3/8	6	2
D34	109 1/4	50 5/8	6	3
D35	109 1/4	63	6	4
D36	109 1/4	72	6	4
722	111	28	6	2
723	111	38 3/8	6	2
724	111	50 5/8	6	3
M2	120	28	6	2
M3	120	38 5/8	6	2
M4	120	50 5/8	6	3
6020	72	24	6	2
6030	72	36	6	2
6040	72	48	6	3
6050	72	60	6	4
6060	72	72	6	4
7020	84	24	6	2
7030	84	36	6	2
7040	84	48	6	3
7050	84	60	6	4
7060	84	72	6	4
8020	96	24	6	2
8030	96	36	6	2
8040	96	48	6	3
8050	96	60	6	4
8060	96	72	6	4
9020	108	24	6	2
9030	108	36	6	2
9040	108	48	6	3
9050	108	60	6	4
9060	108	72	6	4
10020	120	24	6	2
10030	120	36	6	2
10040	120	48	6	3

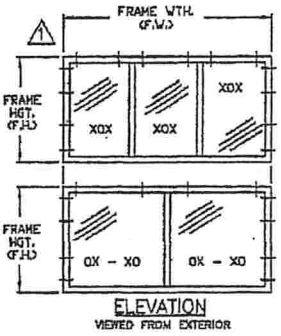

ELEVATION
VIEWED FROM EXTERIOR

Fastener Quantities Table Notes:
1) Buck Width and Height = Frame Width or Height − 1".
2) Only the required number of holes at the correct locations will be present in the frame based on the number of fasteners to be installed listed above.

DESIGN PRESSURE RATING & FBC CODE COMPLIANCE

(P) If exact window size is not listed in fastener installation chart, use fastener quantity listed for next larger size.
(Q) Installations depicted in these instructions acceptable for design pressures to 60 PSF for the window sizes shown in the table. Design Pressures (D.P.) are positive and negative. Overall window assembly design pressure may be less than 60 PSF and shall be determined in accordance with Note 13 of FLEX20100.
(R) Production Glazing may differ from that tested as allowed by ANSI/AAMA/NWWDA 101/I.S. 2, 101/I.S. 2/NAFS or AAMA/WDMA/CSA 101/I.S. 2/A440 and applicable Building Code. See Note 12 and 13 on Drawing FLEX 20100 for further details.
(S) Two by wood buck and/or framing at the head and jambs to be securely fastened to transfer the load to the masonry, concrete or other structural substrate per the FBC and the engineer of record's details as applicable.
(T) See FLEX20100, Notes 10 to 15 for additional FBC Code Compliance.

Florida Extruders Int'l, Inc.
2940 Sweetlane - Sanford, FL 32771
407-323-3300 - 407-322-3507 (fax)
www.floridaextruders.com
Florida COA No. 9235

TITLE
Milestone Series 1000
Non-Impact Resistant Aluminum Flange Frame Horizontal Sliding Window Installation Drawing for Masonry Substrate with Concrete Screws

REVISIONS			
No.	Date	By	Description
0	3/27/06	MA	Supersedes FLE00001
1	11/14/06	RJA	Supersedes FLE00002 Revised Anchorage

Date: 11/14/06
Scale: NTS
Drawn By: RJA
Checked By: JH

Drawing No. FLEX25110
Sheet 2 of 2

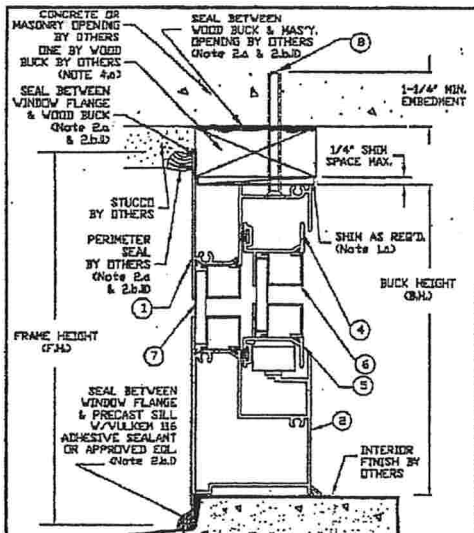

SECTION A–A

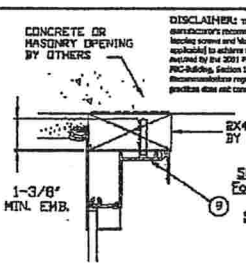

SECTION A–A (ALTERNATE)
For Installation with two by wood bucks.
Similar for Section B–B (not shown).

DISCLAIMER: The purpose of this installation drawing is to present the manufacturer's recommendations for anchorage (i.e., concrete screws, wood screws, backing screws and Vulkem Structural Adhesive for other approved uses) as applicable) to achieve the design pressure specified on the fenestration product as derived by the 2001 Florida Building Code (FBC), Section 1709.4.4, 2004 FBC-Building, Section 1714.5.4 and the 2004 FBC-Residential, Section R613.5. Recommendations regarding flashing, sealing, sealers or color/joint sealant practices does not constitute a warranty either expressed or implied.

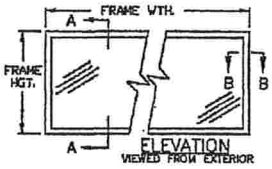

ELEVATION
VIEWED FROM EXTERIOR

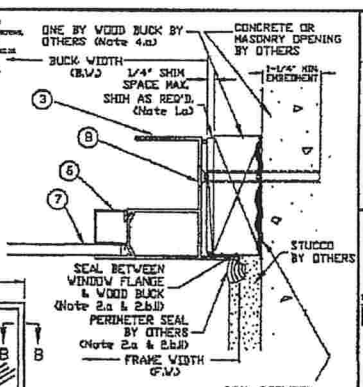

SECTION B–B

GENERAL NOTES

(1 to 15) See General Notes Drawing FLEX20100, Sheet 1 & 2.
(A) Milestone Series 1000 Horizontal Sliding Aluminum Window in XO, OX and XOX configurations is shown.
(B) Drawing applicable to Non-Impact Resistant glazed windows.
(C) Production Glazing may differ from that tested as allowed by ANSI/AAMA/NWWDA 101/I.S. 2, 101/I.S. 2/NAFS or AAMA/WDMA/CSA 101/I.S. 2/A440 and applicable Building Code. See Note 12 and 13 on Drawing FLEX 20100 for further details.
(D) For Fastener Quantities see Sheet 2 of this drawing. See Note (H) regarding deviations.
(E) Concrete screw edge distance measured from edge of concrete/masonry/block to centerline of concrete screw must meet or exceed 2 1/4". Minimum size and embedment per Parts List. See Note (H) regarding deviations.
(F) Wood or tapping screw edge distance measured from edge of wood to centerline of wood or tapping screw must meet or exceed 1". Minimum size and embedment per Parts List. See Note (H) regarding deviations.
(G) Not Used
(H) Any deviation less than the minimum requirements stated must be approved by the manufacturer or engineered by "other" Design Professional in accordance with the applicable Building Code and Product Approval.

FASTENER INSTALLATION INSTRUCTIONS - FLEX25110 (CONTINUED ON SHEET 2)

3/16" DIA. CONCRETE SCREW WITH NON-STRUCTURAL ONE BY WOOD BUCK:

(I) Where window is installed in an opening with a non-structural one by wood buck for the head and jambs and masonry or concrete sill, installation is as follows:
- At the head and jambs, use a 3/16" diameter concrete screw of sufficient length to achieve minimum embedment of 1-1/4" into masonry or concrete. See "Parts List" on this drawing for concrete screw size, embedment and load requirements. See FLEX20100, Note 7 for additional concrete screw requirements.
- At the sill, apply a Structural Adhesive Sealant for the full length of the Sill meeting the requirements of Note 2.b.i on FLEX20100.

(J) See fastener quantity table on sheet 2 for concrete screw quantities and additional installation requirements.
(K) Horizontal Sliding XO-OX and XOX configurations are fabricated with the required number of holes for installations. All factory applied installation fastener holes in the head and jambs will be filled with concrete screws in accordance with note (I) above.

#10 WOOD SCREW WITH STRUCTURAL TWO BY WOOD BUCK (See Section A-A, Alternate on Sheet 1. Similar for Section B-B):

(L) Where window is installed in an opening with a structural two by wood buck for the head and jambs and a masonry or concrete sill, installation is as follows:
- At the head and jambs, use #10 wood screws of sufficient length to achieve 1-3/8" min. embedment into the two by wood buck. See "Parts List" on this drawing for wood screw size and embedment. See FLEX20100, Note 8 for additional wood screw requirements.
- At the sill, apply a Structural Adhesive Sealant for the full length of the Sill meeting the requirements of Note 2.b.i on FLEX20100.

(M) See fastener quantity table this sheet for wood screw quantities and additional installation requirements.
(N) Horizontal Sliding XO-OX and XOX configurations are fabricated with the required number of holes for installations. All factory applied installation fastener holes in the head and jambs will be filled with #10 wood screws in accordance with note (L) above.
(O) Wood screws shall not be used to fasten assembly into the end grain of wood.

PARTS LIST

1 Head - Flange Frame
2 Sill - Flange Frame
3 Jamb - Flange Frame
4 Head - Sash
5 Sill - Sash
6 Glazing Bead
7 Glazing - See Note (B) and (C)
6 3/16" Dia. Flat Head Concrete Screw, with minimum working load in shear of 180 lbs at 1 1/4" embedment. See Note (I) on this drawing and Note 7 on Drawing FLEX20100.
9 #10 Flat Head Wood or Tapping Screw with a minimum embedment of 1-3/8" into "Structural Two By Buck or Framing". See Note (L) on this drawing and Note 8 on Drawing FLEX20100.

Florida Extruders Int'l, Inc.
2940 Sweetlane - Sanford, FL 32771
407-323-3300 - 407-322-3507 (fax)
www.floridaextruders.com
Florida COA No. 9235

TITLE
Milestone Series 1000
Non-Impact Resistant Aluminum Flange Frame Horizontal Sliding Window Installation Drawing for Masonry Substrate with Concrete Screws

REVISIONS			
No.	Date	By	Description
0	3/27/06	MA	Supersedes FLE00001
1	11/14/06	RJA	Supersedes FLE00002 Revised Anchorage

Date: 11/14/06
Scale: NTS
Drawn By: RJA
Checked By: JH

Robert J. Amorusa, P.E.
FL License No. 49752

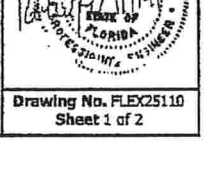

Drawing No. FLEX25110
Sheet 1 of 2

Florida Product Approval # FL9236.1

HORIZONTAL

SHEET: WINb

FLORIDA EXTRUDERS
WINDOWS IN BLOCK
4 of 6
RELEASE DATE: 09/03/08

Maronda Homes
(407) 321-0064 4005 MARONDA WAY SANFORD, FLORIDA

REVISIONS :
2-16-09 Updated to Code.

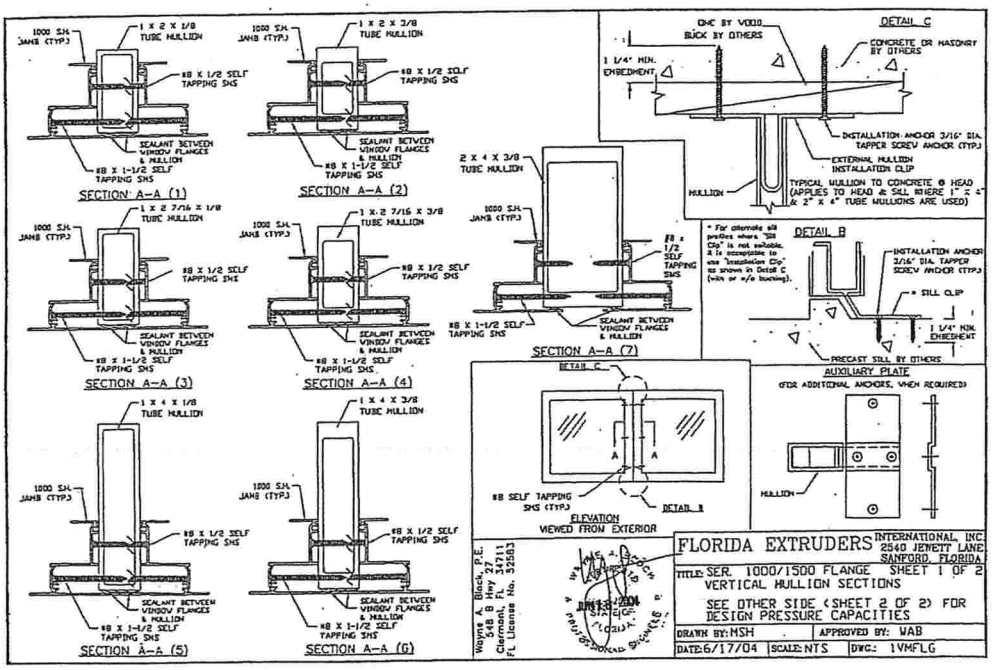

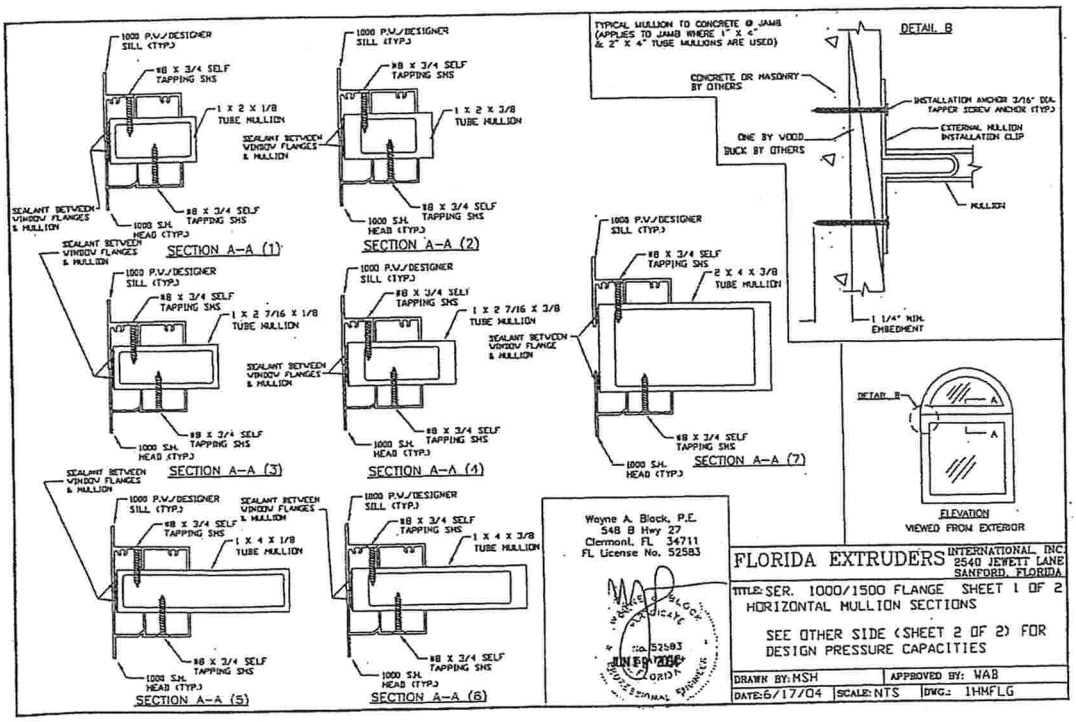

Florida Product Approval # FL3136-R3

MULLIONS

SHEET: WINb

FLORIDA EXTRUDERS

WINDOWS IN BLOCK

5 of 6

RELEASE DATE: 09/03/08

Maronda Homes

(407) 321-0064 4005 MARONDA WAY SANFORD, FLORIDA

REVISIONS :

2-16-09 Updated to Code.

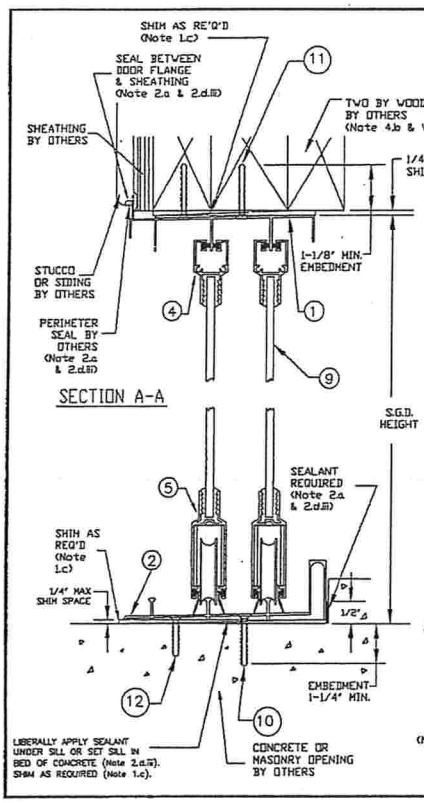

PARTS LIST

1. Head - Flange Frame
2. Sill - Flange Frame
3. Jamb - Flange Frame
4. Head - Panel
5. Sill - Panel
6. Lock Stile - Panel
7. Interlock - Panel
8. Hook Strip
9. Glazing - See Note (B) and (V)
10. 3/16" Dia. Flat Head Concrete Screw with minimum working load in shear of 180 lbs at 1-1/4" embedment. See Note (K) on this drawing and Note 7 on Drawing FLEX20100.
11. #8 Wood or Tapping Screw with a minimum embedment of 1-1/8" into two by framing. See Note (P) on this drawing and Note 8 on Drawing FLEX20100.
12. #8 Wood or Tapping Screw with Plastic Inserts (Note 8.j on FLEX20100) at a minimum embedment of 7/8" into the concrete sill. See Note (O) on this drawing and Note 8 on Drawing FLEX20100.

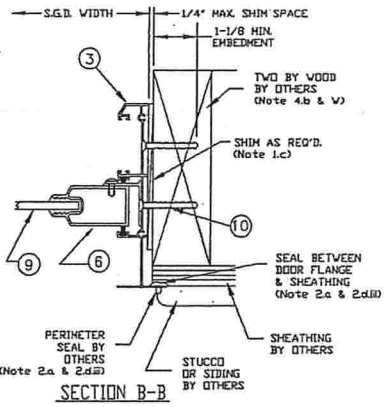

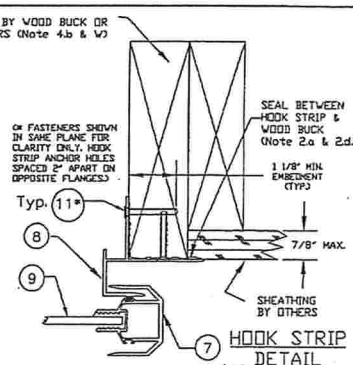

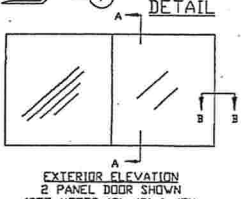

DISCLAIMER: The purpose of this installation drawing is to present the manufacturer's recommendations for anchorage (i.e., concrete screws, wood screws and tapping screws) to achieve the design pressure specified on the fenestration product as required by the 2001 Florida Building Code (FBC), Section 1707.4.4, 2004 FBC-Building, Section 1714.5.4 and the 2004 FBC-Residential, Section R613.6. Recommendations regarding flashing, sealing, sealants or other joint sealant practices does not constitute a warranty either expressed or implied.

Florida Extruders Int'l., Inc.
2540 Jewett Lane • Sanford, FL 32771
407-323-3380 • 407-322-3507 (fax)
www.floridaextruders.com
Florida CGA No. 9335

TITLE: Milestone Series 1000 & 2000 Non-Impact Resistant Aluminum Flange Frame Sliding Glass Door Installation Drawing for Concrete Sill w/Concrete Screws & Wood Substrate w/#8 Wood Screws

REVISIONS			
No.	Date	By	Description
0	1/17/08	RJA	Submitted for review
1	3/02/07	RJA	Revised for new testing

Date: 3/02/07
Scale: NTS
Drawn By: RJA
Checked By: JH

Robert J. Amoruso, P.E.
Fl. License No. 49752
ROBERT JULIES AMORUSO LICENSE NO. 49752 STATE OF FLORIDA PROFESSIONAL ENGINEER
3/8/07

Drawing No. FLEX24111
Sheet 1 of 2

Fastener Installation Chart

Size Code	Configuration	Size: Width	Size: Height	Required Quantities of Fasteners: Jamb (No. & WS)	Head (No. & WS)	Sill (3/16" CS)	Hook Strip (No. & WS)
4068	XX, OX, XO	48	80	5	6	3 (D3)	5
5068	XX, OX, XO	60	80	5	6	3 (D3)	5
6068	XX, OX, XO	72	80	5	5	4 (D2)	5
8068	XX, OX, XO	96	80	5	10	6 (D2)	5
10068	XX, OX, XO	120	80	5	11	7 (D1)	5
5080	XX, OX, XO	60	96	10	6	3 (D3)	10
6080	XX, OX, XO	72	96	10	8	4 (D2)	10
8080	XX, OX, XO	96	96	10	10	5 (D2)	10
10080	XX, OX, XO	120	96	10	12	6 (D2)	10
50100	XX, OX, XO	60	120	12	6	3 (D3)	12
60100	XX, OX, XO	72	120	12	8	4 (D2)	12
80100	XX, OX, XO	96	120	12	10	5 (D2)	12
5068	OXO	108	68	80	8	10	6 (D1)	8
12068	OXO	145	68	80	8	14	9 (D2)	8
15068	OXO	181	68	80	8	18	12 (D4)	8
5080	OXO	108	68	96	10	10	7 (D2)	10
12080	OXO	145	68	96	10	14	10 (D3)	10
15080	OXO	181	68	96	10	16	14 (D6)	10
50100	OXO	108	68	120	12	10	7 (D2)	12
120100	OXO	145	68	120	12	14	11 (D4)	12
5068	XXX	108	58	80	8	10	8 (D1)	8
12068	XXX	142	58	80	8	14	9 (D2)	8
15068	XXX	175	58	80	8	16	12 (D4)	8
5080	XXX	108	58	96	10	10	8 (D1)	10
12080	XXX	142	58	96	10	14	10 (D3)	10
15080	XXX	175	58	96	10	16	14 (D6)	10
50100	XXX	108	58	120	12	10	7 (D2)	12
12100	XXX	142	58	120	12	14	11 (D4)	12
15068	OXXO	119	58	80	8	12	7 (D1)	8
12068	OXXO	143	58	80	8	14	9 (D2)	8
16068	OXXO	191	58	80	8	18	13 (D4)	8
15080	OXXO	119	58	96	10	12	8 (D2)	10
12080	OXXO	143	58	96	10	14	10 (D3)	10
16080	OXXO	191	58	96	10	16	15 (D6)	10
100100	OXXO	118	58	120	12	12	8 (D2)	12
120100	OXXO	143	58	120	12	14	11 (D4)	12
160100	OXXO	191	58	120	12	16	17 (D8)	12
12068	XXXX	117	114	80	8	12	7 (D1)	8
12068	XXXX	141	114	80	8	14	9 (D2)	8
16068	XXXX	189	114	80	8	18	13 (D4)	8
12080	XXXX	117	114	96	10	12	8 (D2)	10
12080	XXXX	141	114	96	10	14	10 (D3)	10
16080	XXXX	189	114	96	10	18	13 (D6)	10
100100	XXXX	117	114	120	12	12	8 (D2)	12
120100	XXXX	141	114	120	12	14	11 (D4)	12
160100	XXXX	189	114	120	12	18	17 (D8)	12

Fastener Installation Chart Notes:
1) In some cases concrete screws are only required in one of the factory applied installation hole sets (i.e., a hole set being the two holes lying in a plane perpendicular to the width of the door frame). In those cases designated as "D0" in the installation chart, one of the holes will receive a Concrete Screw and the remaining holes will be filled in accordance with Notes O and P.
2) In some cases concrete screws are required in both factory applied installation hole sets. "D1" through "D8" designates in which size & configurations two concrete screws are required. The remaining holes will be filled in accordance with Notes O and P.
a) "D1" means, install two concrete screws in one set of installation holes.
b) "D2" means, install two concrete screws in two sets of installation holes.
c) "D3" means, install two concrete screws in three sets of installation holes.
d) "D4" means, install two concrete screws in four sets of installation holes.
e) "D5" means, install two concrete screws in five sets of installation holes.
f) "D6" means, install two concrete screws in six sets of installation holes.
g) "D7" means, install two concrete screws in seven sets of installation holes.
h) "D8" means, install two concrete screws in eight sets of installation holes.
3) Location of additional concrete screws in head & sill should be prioritized as follows:
a) First adjacent to interlock or bat sides in head & sill.
b) Secondly, at each end of head & sill near jamb corner, if needed.
c) Locations in head & sill other than as listed in a & b.
4) Location of additional concrete screws in jambs should be prioritized as follows:
a) First, adjacent to locks in jambs.
b) Secondly, at each end of jambs near head & sill corners.
c) Locations in jambs other than as listed in a & b.
5) CS = concrete screw and WS = wood screw

GENERAL NOTES

(1 to 15) See General Notes Drawing FLEX20100, Sheet 1 & 2.
(A) Milestone Series 1000 Sliding Glass Door is shown. Also applicable to Milestone Series 2000 Sliding Glass Door.
(B) Drawing applicable to Non-Impact Resistant Sliding Glass Doors glazed with 3/16" fully tempered glass. See Note (V).
(C) Where "X" represents moving panel and "O" represents fixed panel, approved configurations are as listed on the fastener installation chart on Sheet 2.
(D) Not all configurations listed on the fastener chart are shown on this drawing, however installation sections "A-A", "B-B" & Hook Strip Detail apply to installation of all approved configurations.
(E) For pocket door configurations, use closest by-pass door size and configuration in the chart to the finished opening of the pocket door.
(F) Concrete screw edge distance measured from edge of concrete/masonry/block to centerline of concrete screw must meet or exceed 2 1/4". Minimum size and embedment per Parts List. See Note (J) regarding deviations.
(G) Wood or tapping screw edge distance measured from edge of wood receiving the point to centerline of wood or tapping screw must meet or exceed 1". Minimum size and embedment per Parts List. See Note (J) regarding deviations.
(H) All field supplied holes in the frame (if required) will be 3/16" in diameter.
(I) Wood screw withdrawal values used to generate the fastening requirements are based on Spruce-Pine-Fur with a Specific Gravity of 0.50. See Note (J) regarding deviations.
(J) Any deviation less than the minimum requirements stated must be approved by the manufacturer or engineered by "other" Design Professional in accordance with the applicable Building Code and Product Approval.

FASTENER INSTALLATION INSTRUCTIONS - FLEX24111

3/16" DIA. CONCRETE SCREW WITH SILL:

(K) Where door is installed in an opening with a masonry or concrete sill, use a 3/16" diameter concrete screw of sufficient length to achieve minimum embedment of 1-1/4" into masonry or concrete. See "Parts List" on Sheet 1 of this drawing for concrete screw size, embedment and load requirements. See FLEX20100, Note 7 for additional concrete screw requirements.
(L) See fastener installation chart this sheet for concrete screw quantities and additional installation requirements.
(M) Install one concrete screw in each pair of factory applied installation holes unless noted otherwise on the fastener installation chart. It is acceptable to install a 3/16" diameter concrete screw with a 1-1/4" embedment in all holes in the sill which will exceed the minimum requirements of the Fastener Installation Chart.
(N) Alternate concrete screw installation fasteners front to back in the sill frame member when both sets of holes are not used.
(O) All remaining factory applied installation fastener holes in the sill not used for concrete screw installation shall be anchored with plastic anchors (see FLEX20100, Note 8.j for details) and #8 wood screws of sufficient length to provide min. 7/8" in. embedment into the concrete or masonry. See "Parts List" on Sheet 1 of this drawing for wood screw size and embedment requirements. See FLEX20100, Note 8 for additional wood screw requirements.

#8 WOOD SCREW WITH STRUCTURAL TWO BY WOOD BUCK FOR HEAD, JAMBS AND POCKET DOOR HOOK STRIP:

(P) Where the head, jambs and pocket door hook strip is installed in a wood opening with a structural two by wood buck and/or framing, use #8 wood screws of sufficient length to achieve 1-1/8" minimum embedment into the two by wood buck and/or framing receiving the point at all factory applied installation holes. See "Parts List" on Sheet 1 of this drawing for wood screw size and embedment requirements. See FLEX20100, Note 8 for additional wood screw requirements.
(Q) See fastener installation chart this sheet for #8 wood screw requirements in jamb(s), head and hook strip.
(R) Not used.
(S) Wood screws shall not be used to fasten assembly into end grain of wood.

DESIGN PRESSURE RATING & FBC CODE COMPLIANCE

(T) If exact door size is not listed in fastener installation chart, use fastener quantity listed for next larger size, for the appropriate design pressure required.
(U) Installations depicted in these instructions acceptable for design pressures to 55 PSF for the window sizes shown in the chart. Design Pressures (D.P.) are positive and negative. Overall window assembly design pressure may be less than that shown in the fastener quantity table and shall be determined in accordance with Note 13 of FLEX20100.
(V) Production Glazing may differ from that tested as allowed by ANSI/AAMA/NWWDA 101/I.S. 2, 101/I.S. 2/NAFS or AAMA/WDMA/CSA 101/I.S. 2/A440 and applicable Building Code. See Note 12 and 13 on Drawing FLEX 20100 for further details.
(W) Two by wood and/or framing to be securely fastened to transfer the load to the masonry, concrete or other structural substrate per the FBC and the engineer of record's details as applicable.
(X) See FLEX20100, Notes 10 to 15 for additional FBC Code Compliance.

Florida Extruders Int'l., Inc.
2540 Jewett Lane • Sanford, FL 32771
407-323-3380 • 407-322-3507 (fax)
www.floridaextruders.com
Florida CGA No. 9335

TITLE: Milestone Series 1000 & 2000 Non-Impact Resistant Aluminum Flange Frame Sliding Glass Door Installation Drawing for Concrete Sill w/Concrete Screws & Wood Substrate w/#8 Wood Screws

REVISIONS			
No.	Date	By	Description
0	1/17/08	RJA	Submitted for review
1	3/02/07	RJA	Revised for new testing

Date: 3/02/07
Scale: NTS
Drawn By: RJA
Checked By: JH

Drawing No. FLEX24111
Sheet 2 of 2

Florida Product Approval # FL8409.2

SLIDING GLASS DOORS

SHEET: WINb

FLORIDA EXTRUDERS
WINDOWS IN BLOCK
6 of 6
RELEASE DATE: 09/03/08

Maronda Homes
(407) 321-0064 4005 MARONDA WAY SANFORD, FLORIDA

REVISIONS:
2-16-09 Updated to Code.

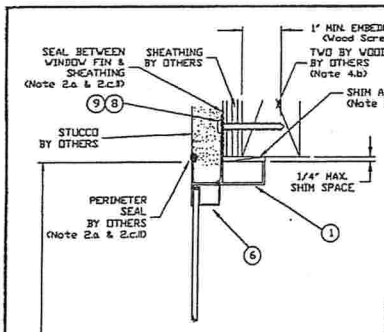

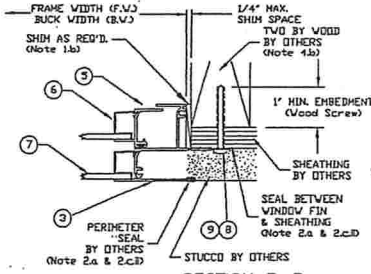

SECTION B–B

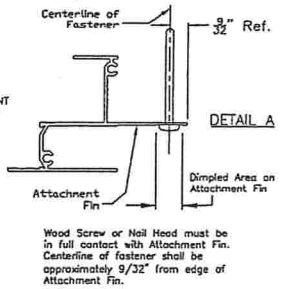

Wood Screw or Nail Head must be in full contact with Attachment Fin. Centerline of fastener shall be approximately 9/32" from edge of Attachment Fin.

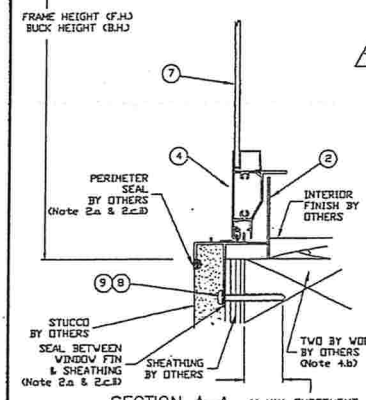

SECTION A–A

GENERAL NOTES

(1 to 15) See General Notes Drawing FLEX20100, Sheet 1 & 2.
(A) Milestone Series 1000 Single Hung Aluminum Window is shown. Also applicable to Milestone Series 1500 and 2000 Single Hung Aluminum Windows.
(B) Drawing applicable to Non-Impact Resistant glazed windows.
(C) Production Glazing may differ from that tested as allowed by ANSI/AAMA/NWWDA 101/I.S. 2, 101/I.S. 2/NAFS or AAMA/WDMA/CSA 101/I.S. 2/A440 and applicable Building Code. See Note 12 and 13 on Drawing FLEX 20100 for further details.
(D) For Fastener Quantities and Spacing see Sheet 2 of this drawing. See Note (H) regarding deviations.
(E) Wood screw and nail withdrawal values used to generate the fastening requirements are based on Spruce-Pine-Fur with a Specific Gravity of 0.50. See Note (H) regarding deviations.
(F) Wood or tapping screw edge distance measured from edge of wood to centerline of wood or tapping screw must meet or exceed 1". Minimum size and embedment per Parts List. See Note (H) regarding deviations.
(G) Nail edge distance measured from edge of wood to centerline of nail must meet or exceed 9/16" or 5 times Shank Diameter, whichever is larger. Minimum size and embedment per Parts List. See Note (H) regarding deviations.
(H) Any deviation less than the minimum requirements stated must be approved by the manufacturer or engineered by "other" Design Professional in accordance with the applicable Building Code and Product Approval.
(I) All field supplied holes in the frame (if required) will be 3/16" in diameter for #8 wood screws or the shank diameter of the nail rounded up to the next standard designation drill bit size.
(J) Wood Screws and Nails SHALL NOT be mixed to fasten the same assembly.

DISCLAIMER: The purpose of this installation drawing is to present the manufacturer's recommendations for anchorage (i.e., wood screws, tapping screws, nails and Vulkem Structural Adhesive (or other approved equal) as applicable) to achieve the design pressure specified on the fenestration product as required by the 2001 Florida Building Code (FBC), Section 1707.4.4, 2004 FBC-Building, Section 1714.5.4 and the 2004 FBC-Residential, Section R613.6. Recommendations regarding flashing, sealing, sealants or other joint sealant practices does not constitute a warranty either expressed or implied.

FASTENER INSTALLATION INSTRUCTIONS – FLEX21120

#8 WOOD SCREWS:

(K) See sheet 2 for #8 Wood Screw installation fastener chart.
(L) #8 Wood Screw must be of sufficient length to achieve minimum embedment of 1" into the two by wood framing.
(M) See Detail "A" for approximate location of the wood screw on the attachment fin.
(N) Wood screws shall not be used to fasten assembly into end grain of wood.

NAILS:

(O) Nails shall meet the following requirements:
- 0.113" diameter or greater,
- sufficient length to achieve minimum embedment of 1 7/8" into the two by wood framing (generally, nail 2 3/8" length or greater shall meet this requirement), and
- helical (screw) or annular (ring) shank style only.

(P) Manufacturer's nails meeting these requirements are (but not limited to) the following:
- Pastode deformed shank nail, No. 404947, 404537, 650111 and 650148.
- Duro-Fast deformed shank nail No. 325.

(Q) Spacing of nails shall be:
- 4" from each corner of the head, sill and jambs, and
- evenly spaced between corner fasteners and not exceeding the following O.C. spacing
  a) 6" o.c. spacing for the jambs & 8" o.c. spacing for the head & sill at 61 PSF to 70 PSF, or
  b) 7" o.c. spacing for the jambs & 9" o.c. spacing for the head & sill at 56 PSF to 60 PSF, or
  c) 7" o.c. spacing for the jambs & 11" o.c. spacing for the head & sill at 51 PSF to 55 PSF, or
  d) 8" o.c. spacing for the jambs & 13" o.c. spacing for the head & sill to 50 PSF.
- See Detail "A" for approximate location of the nail on the attachment fin.

(R) Nails shall not be used to fasten assembly into end grain of wood.

PARTS LIST

1 Head - FinFrame
2 Sill - Fin Frame
3 Jamb - Fin Frame
4 Lift Rail - Sash
5 Jamb - Sash
8 Glazing Bead
7 Glazing - See Note (B) and (C)
8 #8 Pan Head Wood or Tapping Screw with a minimum embedment of 1" into the structural wood substrate. See Note (K) & Detail A on this drawing and Note 4.b & 8 on Drawing FLEX20100.
9 Round Head Deformed Shank Nail with minimum 0.113" diameter (11 GA) and minimum embedment of 1-7/8" into the structural wood substrate. See Note (O) and Detail A on this drawing and Notes 4.b & 9 on Drawing FLEX20100.

Robert J. Amoruso, P.E.
FL License No. 49752

ROBERT JAMES AMORUSO LICENSE No. 49752 STATE OF FLORIDA PROFESSIONAL ENGINEER

Drawing No. FLEX21120
Sheet 1 of 2

Florida Extruders Int'l, Inc.
2540 Jewett Lane - Sanford, FL 32771
407-323-3300 - 407-322-3507 (fax)
www.floridaextruders.com
Florida COA No. 9235

TITLE: Milestone Series 1000, 1500 & 2000 Non-Impact Resistant Aluminum Fin Frame Single Hung Window Installation Drawing for Wood Substrate with Wood Screws or Nails

No.	Date	By	Description
0	12/27/05	RJA	Superseded FL2262.2
1	11/10/06	RJA	Revised And sugge.

Date: 11/10/06
Scale: NTS
Drawn By: RJA
Checked By: JH

No. 8 Wood and Tapping Screw Fastener Location Tables

Series 1000 & 1500

Casement

Width	Eb / Es	Centerline of Head & Sill (yes/no)	Installation Dwg.
18 1/8	4	no	2
25 1/2	4	no	2
29 1/2	4	no	2
38	4	no	2
41	4	yes	1
47	4	yes	1
52 1/8	4	yes	1

Height	Et	L1	L2	L3	Eb	Installation Dwg.
25	1 1/2	n/a	14 1/8	21 1/8	3 7/8	2
37 3/8	1 1/2	n/a	17 1/8	33 1/2	3 7/8	2
49 5/8	1 1/2	n/a	26 3/8	45 3/4	3 7/8	2
55 1/8	1 1/2	n/a	28 1/4	51 3/8	3 7/8	2
62	1 1/2	7 3/8	32 5/8	58 1/8	3 7/8	1
71	1 1/2	18 3/8	41 5/8	67 1/8	3 7/8	1
83	1 1/2	28 3/8	53 5/8	79 1/8	3 7/8	1

Modeler

Width	Eb / Es	Centerline of Head & Sill (yes/no)	Installation Dwg.
23 1/2	4	no	2
27 1/2	4	no	2
31 1/2	4	no	2
35 1/2	4	no	2
39 1/2	4	yes	1
43 1/2	4	yes	1
47 1/2	4	yes	1

Height	Et	L1	L2	L3	Eb	Installation Dwg.
27 1/2	1 1/2	n/a	15 3/8	23 5/8	3 7/8	2
35 1/2	1 1/2	n/a	19 3/8	31 5/8	3 7/8	2
43 1/2	1 1/2	n/a	23 3/8	39 5/8	3 7/8	2
47 1/2	1 1/2	n/a	25 3/8	43 5/8	3 7/8	2
51 1/2	1 1/2	n/a	27 3/8	47 5/8	3 7/8	2
59 1/2	1 1/2	n/a	31 3/8	55 5/8	3 7/8	2
71 1/2	1 1/2	19 3/8	43 3/8	67 5/8	3 7/8	1
83 1/2	1 1/2	31 3/8	55 3/8	79 5/8	3 7/8	1

Series 2000

Casement

Width	Eb / Es	Centerline of Head & Sill (yes/no)	Installation Dwg.
18 1/8	4	no	2
25 1/2	4	no	2
29 1/2	4	no	2
38	4	no	2
41	4	yes	1
47	4	yes	1
52 1/8	4	yes	1

Height	Et	L1	L2	L3	Eb	Installation Dwg.
25	2	n/a	14 1/2	20 1/2	4 1/2	2
37 3/8	2	n/a	20 1/2	33	4 1/2	2
49 5/8	2	n/a	28 1/2	45	4 1/2	2
55 1/4	2	n/a	29 1/2	51	4 1/2	2
62	2	18	32 1/2	57 1/2	4 1/2	1
71	2	26	41 1/2	66 1/2	4 1/2	1
83	2	36	53 1/2	78 1/2	4 1/2	1

Modeler

Width	Eb / Es	Centerline of Head & Sill (yes/no)	Installation Dwg.
23 1/2	4	no	2
27 1/2	4	no	2
31 1/2	4	no	2
35 1/2	4	no	2
39 1/2	4	yes	1
43 1/2	4	yes	1
47 1/2	4	yes	1

Height	Et	L1	L2	L3	Eb	Installation Dwg.
27 1/2	3	n/a	15 1/2	23	4 1/2	2
35 1/2	3	n/a	19 1/2	31	4 1/2	2
43 1/2	3	n/a	23 1/2	39	4 1/2	2
47 1/2	3	n/a	25 1/2	43	4 1/2	2
51 1/2	3	n/a	27 1/2	47	4 1/2	2
59 1/2	3	n/a	31 1/2	55	4 1/2	2
71 1/2	3	26	43 1/2	67	4 1/2	1
83 1/2	3	38	55 1/2	79	4 1/2	1

Fastener Location Table Notes:

1) All dimensions shown taken from the buck width or height of the window frame.
2) Based on the Milestone Series No. and size of the window to be installed, enter the correct table above to determine the locations of the No. 8 Wood or Tapping Screws based on either Installation No. 1 or No. 2 illustrations at right. The applicable installation illustration is noted in the table.
3) Install the No. 8 Wood or Tapping Screws at the locations shown in the table. Tolerance is + / – 1".
4) An installation fastener is only required at the centerline of the head and sill when indicated in the table as "yes". If "no", an installation fastener is not required at the centerline of the head and sill.
5) This table is NOT applicable to the nailing option. See Notes O, P, Q, and R for nail installation locations and spacing.

DESIGN PRESSURE RATING & FBC CODE COMPLIANCE

(S) If exact window size is not listed in fastener location table, use fastener locations listed for next larger size.
(T) Installations depicted in these instructions acceptable for design pressures to 70 PSF for the window sizes shown in the table. Design Pressures (D.P.) are positive and negative. Overall window assembly design pressure may be less than 70 PSF and shall be determined in accordance with Note 13 of FLEX20100.
(U) Production Glazing may differ from that tested as allowed by ANSI/AAMA/NWWDA 101/I.S. 2, 101/I.S. 2/NAFS or AAMA/WDMA/CSA 101/I.S. 2/A440 and applicable Building Code. See Note 12 and 13 on Drawing FLEX 20100 for further details.
(V) Structural two by wood buck and/or framing at the head, sill and jambs to be securely fastened to transfer the load to the wood structural substrate per the FBC and the engineer of record's details as applicable.
(V) See FLEX20100, Notes 10 to 15 for additional FBC Code Compliance.

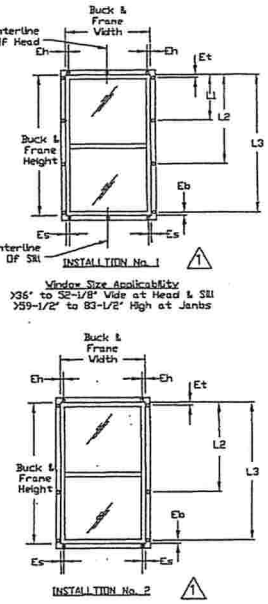

Window Size Applicability
>36" to 52-1/8" Wide at Head & Sill
>59-1/2" to 83-1/2" High at Jambs

Window Size Applicability
to 36" Wide at Head & Sill
to 59-1/2" High at Jambs

Florida Extruders Int'l, Inc.
2540 Jewett Lane - Sanford, FL 32771
407-323-3300 - 407-322-3507 (fax)
www.floridaextruders.com
Florida COA No. 9235

TITLE: Milestone Series 1000, 1500 & 2000 Non-Impact Resistant Aluminum Fin Frame Single Hung Window Installation Drawing for Wood Substrate with Wood Screws or Nails

No.	Date	By	Description
0	12/27/05	RJA	Superseded FL2262.2
1	11/10/06	RJA	Revised And sugge.

Date: 11/10/06
Scale: NTS
Drawn By: RJA
Checked By: JH

Drawing No. FLEX21120
Sheet 2 of 2

Florida Product Approval # FL9262.2

SINGLE HUNG

SHEET: WINf

FLORIDA EXTRUDERS
WINDOWS IN FRAME
1 of 7
RELEASE DATE: 09/03/08

Maronda Homes
(407) 321-0064 4005 MARONDA WAY SANFORD, FLORIDA

REVISIONS:
2-16-09 Updated to Code.

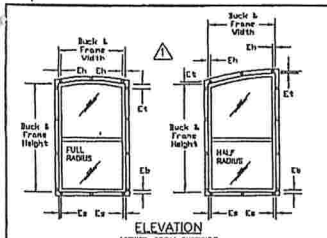

FULL AND HALF RADIUS HEAD WINDOWS

Fastener Location Table (Sheet 3 and 4) are applicable to Full and Half Radius Head SH Windows shown above. Fastener edge distances shown above are applicable to Full and Half Radius Head SH Windows. For intermediate head, sill and jamb fasteners located between edge fasteners, see Installation Illustrations below.

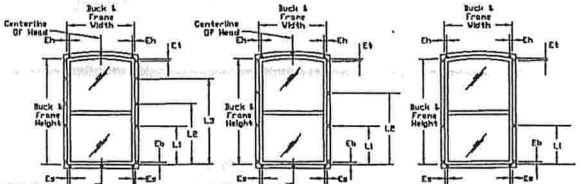

Installation Illustrations No. 1, 2 and 3 Showing Locations of Wood Screw Fasteners
See table on Sheet 3 for Series 1000 & 1500 Commodity and Modular Window Sizes
See table on Sheet 4 for Series 2000 Commodity and Modular Window Sizes

Fastener Location Table Notes (See Sheets 3 and 4 for Tables):

1) All dimensions shown taken from the buck width or height of the window frame.
2) Based on the Milestone Series No. and size of the window to be installed, enter the correct table above to determine the locations of the No. 8 Wood or Tapping Screws based on either Installation No. 1, No. 2 or No. 3 illustrations below. The applicable installation illustration is noted in the table. The full radius head frame is shown, but illustrations also applicable to half radius head window (see elevation for edge distances at frame head (Et).
3) Install the No. 8 Wood or Tapping Screws at the locations shown in the table. Tolerance is +/ 1 1".
4) An installation fastener is only required at the centerline of the head and sill when indicated in the table as "yes". If "no", an installation fastener is not required at the centerline of the head and sill.
5) This table is NOT applicable to the nailing option. See Notes O, P, Q, and R for nail installation locations and spacing.

DESIGN PRESSURE RATING & FBC CODE COMPLIANCE

(S) If exact window size is not listed in fastener location table, use fastener locations listed for next larger size.
(T) Installations expected in these instructions acceptable for design pressures to 70 PSF for the window sizes shown in the table. Design Pressures (D.P.) are positive and negative. Overall window assembly design pressure may be less than 70 PSF and shall be determined in accordance with Note 13 of FLEX20100.
(U) Production Glazing may differ from that tested as allowed by ANSI/AAMA/NWWDA 101/I.S. 2, 101/I.S. 2/NAFS or AAMA/WDMA/CSA 101/I.S. 2/A440 and applicable Building Code. See Note 13 and 13 on Drawing FLEX 20100 for further details.
(V) Structural two by wood buck and/or framing at the 1 head, sill and jambs to be securely fastened to transfer the load to the wood structural substrate per the FBC and the engineer of record's details as applicable.
(W) See FLEX20100, Notes 10 to 13 for additional FBC Code Compliance.

Drawing No. FLEX22120
Sheet 2 of 4

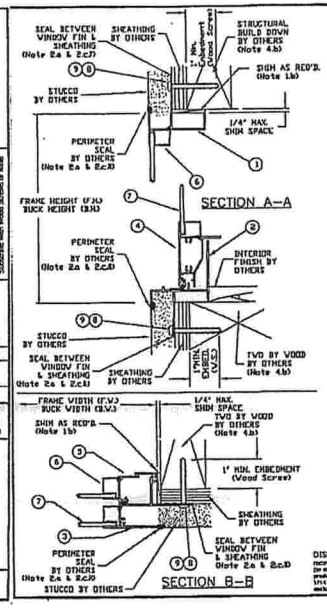

GENERAL NOTES

(1 to 13) See General Notes Drawing FLEX20100, Sheet 1 & 2.
(A) Milestone Series 1000 Single Hung Radius Head Aluminum Window is shown. Also applicable to Milestone Series 1500 and 2000 Single Hung Radius Head Aluminum Windows.
(B) Drawing applicable to Non-Impact Resistant glazed windows.
(C) Production Glazing may differ from that tested as allowed by ANSI/AAMA/NWWDA 101/I.S. 2, 101/I.S. 2/NAFS or AAMA/WDMA/CSA 101/I.S. 2/A440 and applicable building Code. See Note 12 and 13 on Drawing FLEX 20100 for further details.
(D) For Fastener Quantities and Spacing see Sheet 3 & 4 of this drawing. See Note (H) regarding deviations.
(E) Wood screw and nail withdrawal values used to generate the fastening requirements are based on Spruce-Pine-Fur with a Specific Gravity of 0.50. See Note (H) regarding deviations.
(F) Wood or tapping screw edge distance measured from edge of wood to centerline of wood or tapping screw must meet or exceed 1". Minimum size and embedment per Parts List. See Note (H) regarding deviations.
(G) Nail edge distance measured from edge of wood to centerline of nail must meet or exceed 9/16" or 5 times Shank Diameter, whichever is larger. Minimum size and embedment per Parts List. See Note (H) regarding deviations.
(H) Any deviation less than the minimum requirements stated must be approved by the manufacturer or engineered by "other" Design Professional in accordance with the applicable Building Code and Product Approval.
(I) All field supplied holes in the frame (if required) will be 3/16" in diameter for #8 wood screws or the shank diameter of the nail rounded up to the next standard designation drill bit size.
(J) Wood Screws and Nails SHALL NOT be relied to fasten the screw assembly.

FASTENER INSTALLATION INSTRUCTIONS - FLEX22120

#8 WOOD SCREWS:

(K) See sheets 3 & 4 for #8 Wood Screw installation fastener chart.
(L) #8 Wood Screw must be of sufficient length to achieve minimum embedment of 1" into the two by wood framing.
(M) See Detail "A" for approximate location of the wood screw on the attachment fin.
(N) Wood screws shall not be used to fasten assembly into end grain of wood.

NAILS:

(O) Nails shall meet the following requirements:
- 0.113" diameter or greater,
- sufficient length to achieve minimum embedment of 1 7/8" into the two by wood framing (generally, nail 2 3/8" length or greater shall meet this requirements), and
- helical (screw) or annular (ring) shank style only.

(P) Manufacturer's nails meeting these requirements are (but not limited to) the following:
- Paslode Galvanized shank nail, No. 404947, 404937, 650111 and 650141.
- Duro-Fast galvanized shank nail No. 325.

(Q) Spacing of nails shall be:
- 4" from each corner of the head, sill and jambs, and
- evenly spaced between corner fasteners and nail extending the following O.C. spacing
  - a) 8" o.c. spacing for the jambs & 8" o.c. spacing for the head & sill at 61 PSF to 70 PSF, or
  - b) 7" o.c. spacing for the jambs & 9" o.c. spacing for the head & sill at 50 PSF to 60 PSF, or
  - c) 7" o.c. spacing for the jambs & 11" o.c. spacing for the head & sill at 51 PSF to 55 PSF, or
  - d) 6" o.c. spacing for the jambs & 12" o.c. spacing for the head & sill at 30 PSF.
- see Detail "A" for approximate location of the nail on the attachment fin.

(R) Nails shall not be used to fasten assembly into end grain of wood.

DISCLAIMER: The purpose of this Installation Drawing is to present the manufacturer's recommendations for anchoring (i.e., wood screws, lag/tap screws, nails and others) structural substrate (or other approved means as applicable) to achieve the design pressure specified on the Installation Drawing as required by the 2001 Florida Building Code (FBC), Section 1304.4.4, 2004 FBC-Residential, Section 301.1.1.1 and the 2004 FBC-Residential, Section R301.1.1. Recommendations regarding fastening, anchoring or other joint method/practice does not constitute a warranty either expressed or implied.

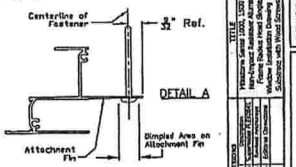

Wood Screw or Nail Head must be in full contact with Attachment Fin. Centerline of fastener shall be approximately 9/32" from edge of Attachment Fin.

DETAIL A

PARTS LIST

1 Head - Fin Frame
2 Sill - Fin Frame
3 Jamb - Fin Frame
4 Lift Rail - Sash
5 Jamb - Sash
6 Glazing Bead - Rigid Vinyl
7 Glazing - See Note (B) and (C)
8 #8 Pan Head Wood or Tapping Screw with a minimum embedment of 1" into the structural wood substrate. See Note (K) and Detail A on this drawing and Note 4.b & 8 on Drawing FLEX20100.
9 Round Head Galvanized Shank Nail with minimum 0.113" diameter (11 GA) and minimum embedment of 1-7/8" into the structural wood substrate. See Note (O) and Detail A on this drawing and Notes 4.b & 9 on Drawing FLEX20100.

Robert J. Simonsen, P.E.
FL License No. 49753

Drawing No. FLEX22120
Sheet 1 of 4

Florida Extruders Int'l., Inc.
3240 Jewel Lane - Sanford, FL 32771
407-323-3200 - 407-323-3207 (fax)
Florida COA No. 9325

REVISIONS :
2-16-09 Updated to Code.

Maronda Homes
4005 MARONDA WAY SANFORD, FLORIDA
(407) 321-0064

FLORIDA EXTRUDERS
WINDOWS IN FRAME
2 of 7
RELEASE DATE: 09/03/08

SHEET: WINf

No. 8 Wood and Tapping Screw Fastener Location Tables – Series 1000 & 1500 Single Hung Full and Half Radius Head Windows

Series 1000 & 1500 Full Radius Head Single Hung Windows — No. 8 Wood Screw Location

Modular Unit Size	Width	Nom Width (Inch) / Height (Inch) Not Defined	Nom Width (Inch) / Height (Inch) Defined	Grids	Centerline of Head (Inches)	Et	Eb	L1	L2	L3	Installation No.
2024	22 1/2	23 23/32	32 23/32	4	no	1 1/2	3 7/8	12 1/8	—	—	3
2032	22 1/2	32 23/32	42 23/32	4	no	1 1/2	3 7/8	18 1/8	—	—	3
2036	22 1/2	36 23/32	46 23/32	4	no	1 1/2	3 7/8	21 1/8	—	—	3
2040	22 1/2	40 23/32	50 23/32	4	no	1 1/2	3 7/8	23 1/8	—	—	3
2044	22 1/2	44 23/32	54 23/32	4	no	1 1/2	3 7/8	24 1/8	—	—	3
2050	22 1/2	50 23/32	60 23/32	4	no	1 1/2	3 7/8	27 1/8	24 1/8	—	3
2060	22 1/2	60 23/32	70 23/32	4	no	1 1/2	3 7/8	29 1/8	24 1/8	—	3
2070	22 1/2	70 23/32	80 23/32	4	no	1 1/2	3 7/8	29 1/8	24 1/8	24 1/8	3
2424	27 1/2	23 1/2	23 1/2	4	no	1 1/2	3 7/8	12 1/8	—	—	3
2432	27 1/2	31 1/2	31 1/2	4	no	1 1/2	3 7/8	18 1/8	—	—	3
2436	27 1/2	35 1/2	35 1/2	4	no	1 1/2	3 7/8	21 1/8	—	—	3
2440	27 1/2	39 1/2	39 1/2	4	no	1 1/2	3 7/8	23 1/8	—	—	3
2444	27 1/2	43 1/2	43 1/2	4	no	1 1/2	3 7/8	24 1/8	—	—	3
2450	27 1/2	49 1/2	49 1/2	4	no	1 1/2	3 7/8	27 1/8	—	—	3
2460	27 1/2	59 1/2	59 1/2	4	no	1 1/2	3 7/8	29 1/8	24 1/8	—	3
2470	27 1/2	69 1/2	69 1/2	4	no	1 1/2	3 7/8	29 1/8	24 1/8	24 1/8	3
2480	27 1/2	79 1/2	79 1/2	4	no	1 1/2	3 7/8	29 1/8	24 1/8	24 1/8	3
3024	31 1/2	23 23/32	32 23/32	4	no	1 1/2	3 7/8	12 1/8	—	—	3
3032	31 1/2	31 23/32	40 23/32	4	no	1 1/2	3 7/8	18 1/8	—	—	3
3036	31 1/2	35 23/32	44 23/32	4	no	1 1/2	3 7/8	20 1/8	—	—	3
3040	31 1/2	39 23/32	48 23/32	4	no	1 1/2	3 7/8	22 1/8	—	—	3
3044	31 1/2	43 23/32	52 23/32	4	no	1 1/2	3 7/8	24 1/8	—	—	3
3050	31 1/2	49 23/32	58 23/32	4	no	1 1/2	3 7/8	27 1/8	24 1/8	—	3
3060	31 1/2	59 23/32	68 23/32	4	no	1 1/2	3 7/8	29 1/8	24 1/8	—	3
3070	31 1/2	69 23/32	78 23/32	4	no	1 1/2	3 7/8	29 1/8	24 1/8	24 1/8	3
3080	31 1/2	79 23/32	88 23/32	4	no	1 1/2	3 7/8	29 1/8	24 1/8	24 1/8	3
3636	35 1/2	35 1/2	35 1/2	4	no	1 1/2	3 7/8	20 1/8	—	—	3
3644	35 1/2	43 1/2	43 1/2	4	no	1 1/2	3 7/8	24 1/8	—	—	3
3650	35 1/2	49 1/2	49 1/2	4	no	1 1/2	3 7/8	27 1/8	—	—	3
3660	35 1/2	59 1/2	59 1/2	4	no	1 1/2	3 7/8	29 1/8	24 1/8	—	3
3670	35 1/2	69 1/2	69 1/2	4	no	1 1/2	3 7/8	29 1/8	24 1/8	24 1/8	3
3680	35 1/2	79 1/2	79 1/2	4	no	1 1/2	3 7/8	29 1/8	24 1/8	24 1/8	3
4024	39 1/2	23 1/2	23 1/2	4	yes	1 1/2	3 7/8	12 1/8	—	—	3
4030	39 1/2	29 1/2	29 1/2	4	yes	1 1/2	3 7/8	16 1/8	—	—	3
4036	39 1/2	35 1/2	35 1/2	4	yes	1 1/2	3 7/8	20 1/8	—	—	3
4040	39 1/2	39 1/2	39 1/2	4	yes	1 1/2	3 7/8	22 1/8	—	—	3
4044	39 1/2	43 1/2	43 1/2	4	yes	1 1/2	3 7/8	24 1/8	—	—	3
4050	39 1/2	49 1/2	49 1/2	4	yes	1 1/2	3 7/8	27 1/8	—	—	3
4060	39 1/2	59 1/2	59 1/2	4	yes	1 1/2	3 7/8	29 1/8	24 1/8	—	3
4070	39 1/2	69 1/2	69 1/2	4	yes	1 1/2	3 7/8	29 1/8	24 1/8	24 1/8	3
4080	39 1/2	79 1/2	79 1/2	4	yes	1 1/2	3 7/8	29 1/8	24 1/8	24 1/8	3
4424	43 1/2	23 1/2	23 1/2	4	yes	1 1/2	3 7/8	12 1/8	—	—	3
4430	43 1/2	29 1/2	29 1/2	4	yes	1 1/2	3 7/8	16 1/8	—	—	3
4436	43 1/2	35 1/2	35 1/2	4	yes	1 1/2	3 7/8	20 1/8	—	—	3
4440	43 1/2	39 1/2	39 1/2	4	yes	1 1/2	3 7/8	22 1/8	—	—	3
4444	43 1/2	43 1/2	43 1/2	4	yes	1 1/2	3 7/8	24 1/8	—	—	3
4450	43 1/2	49 1/2	49 1/2	4	yes	1 1/2	3 7/8	27 1/8	—	—	3
4460	43 1/2	59 1/2	59 1/2	4	yes	1 1/2	3 7/8	29 1/8	24 1/8	—	3
4470	43 1/2	69 1/2	69 1/2	4	yes	1 1/2	3 7/8	29 1/8	24 1/8	24 1/8	3
4480	43 1/2	79 1/2	79 1/2	4	yes	1 1/2	3 7/8	29 1/8	24 1/8	24 1/8	3
4870	47 1/2	69 1/2	69 1/2	4	yes	1 1/2	3 7/8	29 1/8	24 1/8	24 1/8	3
4880	47 1/2	79 1/2	79 1/2	4	yes	1 1/2	3 7/8	29 1/8	24 1/8	24 1/8	3
4890	47 1/2	89 1/2	89 1/2	4	yes	1 1/2	3 7/8	29 1/8	24 1/8	24 1/8	3
4896	47 1/2	95 1/2	95 1/2	4	yes	1 1/2	3 7/8	29 1/8	24 1/8	24 1/8	3
4900	47 1/2	99 1/2	99 1/2	4	yes	1 1/2	3 7/8	29 1/8	24 1/8	24 1/8	3
4904	47 1/2	103 1/2	103 1/2	4	yes	1 1/2	3 7/8	29 1/8	24 1/8	24 1/8	3
4910	47 1/2	109 1/2	109 1/2	4	yes	1 1/2	3 7/8	29 1/8	24 1/8	24 1/8	3

Series 1500 & 1500 Full Radius Head Single Hung Windows — No. 8 Wood Screw Location

Commodity Unit Size	Width	Nom Width (Inch) / Height (Inch) Not Defined	Nom Width (Inch) / Height (Inch) Defined	Grids	Centerline of Head (Inches)	Et	Eb	L1	L2	L3	Installation No.
12	18 1/8	23 13/16	27 9/16	2	no	1 1/2	3 7/8	10 7/8	—	—	3
13	18 1/8	28 3/16	32 11/16	2	no	1 1/2	3 7/8	15 1/8	—	—	3
14	18 1/8	30 7/16	34 15/16	2	no	1 1/2	3 7/8	16 1/8	—	—	3
14A	18 1/8	32 9/16	37 3/16	2	no	1 1/2	3 7/8	17 1/8	—	—	3
15	18 1/8	42 13/16	47 9/16	4	no	1 1/2	3 7/8	23 1/8	21 1/8	—	3
16	18 1/8	47 13/16	52 9/16	4	no	1 1/2	3 7/8	23 1/8	24 1/8	—	3
17	18 1/8	63	63	4	no	1 1/2	3 7/8	29 1/8	24 1/8	24 1/8	3
19B	25 1/2	28 7/16	33 9/16	4	no	1 1/2	3 7/8	10 7/8	—	—	3
19D	25 1/2	34 13/16	40 15/16	4	no	1 1/2	3 7/8	15 1/8	—	—	3
19E	25 1/2	63 7/16	63 7/16	4	no	1 1/2	3 7/8	22 1/8	—	—	3
19WS	25 1/2	66 13/16	66 13/16	4	no	1 1/2	3 7/8	23 1/8	—	—	3
19G	25 1/2	72 13/16	74 9/16	4	no	1 1/2	3 7/8	24 1/8	—	—	3
19H	25 1/2	83	83	4	no	1 1/2	3 7/8	27 1/8	—	—	3
19J	25 1/2	98 13/16	98 13/16	4	no	1 1/2	3 7/8	29 1/8	24 1/8	—	3
19K	25 1/2	113 13/16	113 13/16	4	no	1 1/2	3 7/8	29 1/8	24 1/8	24 1/8	3
19L	25 1/2	123 13/16	123 13/16	4	no	1 1/2	3 7/8	29 1/8	24 1/8	24 1/8	3
19M	25 1/2	133 13/16	133 13/16	4	no	1 1/2	3 7/8	29 1/8	24 1/8	24 1/8	3
19N	25 1/2	143 13/16	143 13/16	4	no	1 1/2	3 7/8	29 1/8	24 1/8	24 1/8	3
19P	25 1/2	153 13/16	153 13/16	4	no	1 1/2	3 7/8	29 1/8	24 1/8	24 1/8	3
22	28	27 5/16	30 9/16	4	no	1 1/2	3 7/8	10 7/8	—	—	3
23	28	38 11/16	42 11/16	4	no	1 1/2	3 7/8	15 1/8	—	—	3
24	28	41 15/16	46 15/16	4	no	1 1/2	3 7/8	16 1/8	—	—	3
24A	28	47 9/16	52 9/16	4	no	1 1/2	3 7/8	18	—	—	3
25	28	64 9/16	67 5/16	4	no	1 1/2	3 7/8	23 1/8	21 1/8	—	3
26	28	73 5/16	75 5/16	4	no	1 1/2	3 7/8	23 1/8	24 1/8	—	3
27	28	83	83	4	no	1 1/2	3 7/8	27 1/8	24 1/8	—	3
41A	47	28 1/2	32 9/32	4	yes	1 1/2	3 7/8	10 7/8	—	—	3
41B	47	40 19/32	44 17/32	4	yes	1 1/2	3 7/8	15 1/8	—	—	3
41C	47	52 17/32	56 25/32	4	yes	1 1/2	3 7/8	18 1/8	—	—	3
41D	47	58 19/32	62 13/32	4	yes	1 1/2	3 7/8	20 1/8	—	—	3
41E	47	86 1/32	90 7/32	4	yes	1 1/2	3 7/8	23 1/8	24 1/8	—	3
41F	47	74 7/32	78 25/32	4	yes	1 1/2	3 7/8	23 1/8	24 1/8	—	3
41G	47	83	87 3/32	4	yes	1 1/2	3 7/8	24 1/8	24 1/8	—	3
42	47	28 1/2	32 9/32	4	yes	1 1/2	3 7/8	10 7/8	—	—	3
43	47	40 19/32	44 17/32	4	yes	1 1/2	3 7/8	15 1/8	—	—	3
44	47	52 17/32	56 25/32	4	yes	1 1/2	3 7/8	18 1/8	—	—	3
44A	47	58 19/32	62 13/32	4	yes	1 1/2	3 7/8	20 1/8	—	—	3
45	47	86 1/32	90 7/32	4	yes	1 1/2	3 7/8	23 1/8	24 1/8	—	3
46	47	74 7/32	78 25/32	4	yes	1 1/2	3 7/8	23 1/8	24 1/8	—	3
47	47	83	87 3/32	4	yes	1 1/2	3 7/8	24 1/8	24 1/8	—	3
48	47	98 1/32	102 7/32	4	yes	1 1/2	3 7/8	27 1/8	24 1/8	—	3
49	47	113 1/32	117 7/32	4	yes	1 1/2	3 7/8	29 1/8	24 1/8	—	3
50	47	123 1/32	127 7/32	4	yes	1 1/2	3 7/8	29 1/8	24 1/8	—	3
51	47	133 1/32	137 7/32	4	yes	1 1/2	3 7/8	29 1/8	24 1/8	—	3
52	47	143 1/32	147 7/32	4	yes	1 1/2	3 7/8	29 1/8	24 1/8	—	3
53	47	153 1/32	157 7/32	4	yes	1 1/2	3 7/8	29 1/8	24 1/8	—	3
54	47	163 1/32	167 7/32	4	yes	1 1/2	3 7/8	29 1/8	24 1/8	—	3
54A	47	173 1/32	177 7/32	4	yes	1 1/2	3 7/8	29 1/8	24 1/8	—	3
55	47	183 1/32	187 7/32	4	yes	1 1/2	3 7/8	29 1/8	24 1/8	—	3
56	47	193 1/32	197 7/32	4	yes	1 1/2	3 7/8	29 1/8	24 1/8	—	3
57	n/a	n/a	n/a	n/a	n/a	n/a	n/a	n/a	n/a	n/a	n/a

Fastener Location Table Notes:

1) All dimensions shown taken from the buck width or height of the window frame.
2) Based on the Milestone Series No. and size of the window to be installed, enter the correct table above to determine the locations of the No. 8 Wood or Tapping Screws based on either Installation Nd. 1, No. 2 or No. 3 illustrations on Sheet 2. The applicable Installation Illustration is noted in the table. The full radius head frame is shown, but illustrations also applicable to half radius head window (see elevation for edge distances at frame head (Et).
3) Install the No. 8 Wood or Tapping Screws at the locations shown in the table. Tolerance is +/- 1
4) An installation fastener is only required at the centerline of the head and sill when indicated in the table as "yes". If "no", an installation fastener is not required at the centerline of the head and sill.
5) This table is NOT applicable to the nailing option. See Notes O, P, Q, and R for nail installation locations and spacing.

See Sheet 2 for Fastener Installation Illustrations showing locations of fastener spacing dimensions Et, Eb, Eh, Es, L1, L2, L3 and centerline of head/sill requirements shown in the tables above.

Drawing No. FLEX22120
Sheet 3 of 4

Florida Product Approval # FL9262.2

SINGLE HUNG

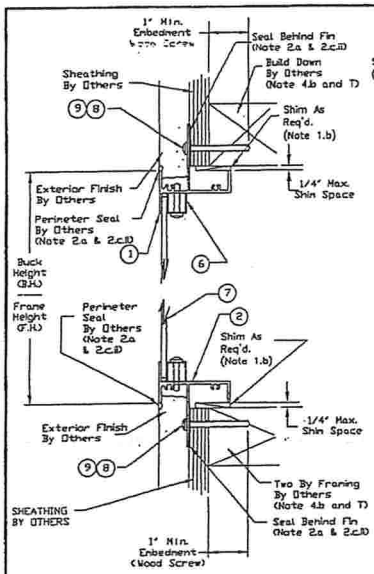

SECTION A-A

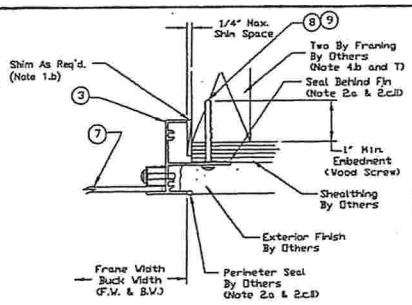

SECTION B-B

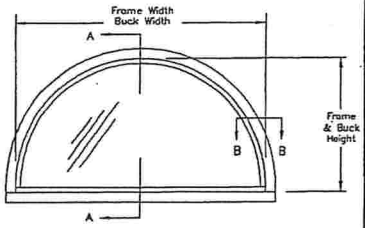

EXTERIOR ELEVATION

DISCLAIMER: The purpose of this installation drawing is to present the manufacturer's recommendations for anchorage [i.e., wood screws, tapping screws and nails] to achieve the design pressure specified on the fenestration product as required by the 2001 Florida Building Code (FBC), Section 1707.4.4, 2004 FBC-Building, Section 1714.5.4 and the 2004 FBC-Residential, Section R613.6. Recommendations regarding flashing, sealing, sealants or other joint sealant practices does not constitute a warranty either expressed or implied.

PARTS LIST

1. Head - FinFrame
2. Sill - Fin Frame
3. Jamb - Fin Frame
4. Not Used
5. Not Used
6. Glazing Bead - Rigid Vinyl
7. Glazing - See Note (B) and (C)
8. #8 Pan Head Wood or Tapping Screw with a minimum embedment of 1" into the structural wood substrate. See Note (K) on Sheet 2 and Detail A on this drawing and Note 4.b & 8 on Drawing FLEX20100.
9. Round Head Deformed Shank Nail with minimum 0.113" diameter (11 GA) and minimum embedment of 1-7/8" into the structural wood substrate. See Note (N) on Sheet 2 and Detail A on this drawing and Notes 4.b & 9 on Drawing FLEX20100.

GENERAL NOTES

(1 to 15) See General Notes Drawing FLEX20100, Sheet 1 & 2.
(A) Milestone Series 1000 Designer Fixed Aluminum Window is shown. Also applicable to Series 2000 Designer Fixed Aluminum Windows.
(B) Drawing applicable to Non-Impact Resistant glazed windows.
(C) Production Glazing may differ from that tested as allowed by ANSI/AAMA/NWWDA 101/I.S. 2, 101/I.S. 2/NAFS or AAMA/WDMA/CSA 101/I.S. 2/A440 and applicable Building Code. See Note 12 and 13 on Drawing FLEX 20100 for further details.
(D) For Fastener Spacing see Notes (L) and (P) on Sheet 2 of this drawing. See Note (H) regarding deviations.
(E) Wood screw and nail withdrawal values used to generate the fastening requirements are based on Spruce-Pine-Fur with a Specific Gravity of 0.60. See Note (H) regarding deviations.
(F) Wood or tapping screw edge distance measured from edge of wood to centerline of wood or tapping screw must meet or exceed 1". Minimum size and embedment per Parts List. See Note (H) regarding deviations.
(G) Nail edge distance measured from edge of wood to centerline of nail must meet or exceed 9/16" or 5 times Shank Diameter, whichever is larger. Minimum size and embedment per Parts List. See Note (H) regarding deviations.
(H) Any deviation less than the minimum requirements stated must be approved by the manufacturer or engineered by "other" Design Professional in accordance with the applicable Building Code and Product Approval.
(I) All field supplied holes in the frame (if required) will be 3/16" in diameter for #8 wood screws or the shank diameter of the nail rounded up to the next standard designation drill bit size.
(J) Wood Screws and Nails SHALL NOT be mixed to fasten the same assembly.

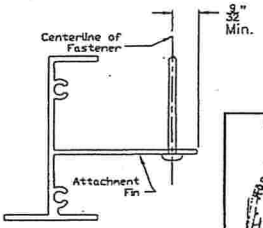

Wood Screw or Nail Head must be in full contact with Attachment Fin. Centerline of fastener shall be approximately 3/32" from edge of Attachment Fin.

DETAIL A

Florida Extruders Int'l., Inc.
2540 Jewett Lane - Sanford, FL 32771
407-323-3300 - 407-322-3507 (fax)
www.floridaextruders.com
Florida COA No. 9235

TITLE
Milestone Series 1000 & 2000
Non-Impact Resistant Aluminum Fin
Frame Designer Fixed Window
Installation Drawing for Wood
Substrate with Wood Screws or Nails

REVISIONS			
No.	Date	By	Description
0	12/20/06	RJA	Submitted For Approval
1	1/17/08	RJA	Revised Anchorage.
2	1/9/07	RJA	Added edge distance note.

Date: 1/9/07
Scale: NTS
Drawn By: RJA
Checked By: JH

Robert J. Amoroso, P.E.
FL License No. 49752

ROBERT JAMES AMOROSO LICENSE No. 49752 STATE OF FLORIDA PROFESSIONAL ENGINEER 1/9/07

Drawing No. FLEX28120
Sheet 1 of 2

FASTENER INSTALLATION INSTRUCTIONS - FLEX28120

#8 WOOD SCREWS:

(K) #8 Wood Screw must be of sufficient length to achieve minimum embedment of 1" into the two by wood framing or the build-down framing component.
(L) #8 Wood Screw spacing shall be as follows:
- 4-1/2" maximum from each corner of head, sill or jambs,
- evenly spaced between corner fasteners but not exceeding 18" o.c. spacing in head, sill or jambs for the following configurations at design pressures to 70 PSF,
  - eyebrow
  - half-circle arch
  - half-eyebrow
  - octagon
  - fan
  - pentoid
  - full-circle
  - half-circle
  - triangle
  - trapezoid
  - oval
- evenly spaced between corner fasteners but not exceeding 15" o.c. spacing in head, sill or jambs for the following configurations at design pressures to 70 PSF,
  - quarter-circle
  - quarter-circle arch
  - half-fan
- tolerance is +/- 1", and
- this tolerance is applicable to the evenly spaced distance. 2
- Corner distance measured from frame/buck width or height dimension of frame.

(M) Wood screws shall not be used to fasten assembly into end grain of wood.

NAILS:

(N) Nails shall meet the following requirements:
- 0.113" diameter or greater,
- sufficient length to achieve minimum embedment of 1 7/8" into the two by wood or build-down framing (generally, nail 2 3/8" length or greater shall meet this requirement), and
- helical (screw) or annular (ring) shank style only.

(O) Manufacturer's nails meeting these requirements are (but not limited to) the following:
- Paslode deformed shank nail, No. 404947, 404537, 650111 and 650148.
- Duro-Fast deformed shank nail No. 325.

(P) Spacing of nails shall be:
- 4-1/2" maximum from each corner of the head, sill and jambs,
- evenly spaced between corner fasteners but not exceeding the o.c. spacing in head, sill and jambs for the following configurations at design pressures 46 to 70 PSF,

eyebrow	5" o.c. spacing
half-eyebrow	5" o.c. spacing
fan	6" o.c. spacing
half-fan	4" o.c. spacing
full-circle	7" o.c. spacing
half-circle	6" o.c. spacing
half-circle arch	6" o.c. spacing
quarter-circle	4" o.c. spacing
quarter-circle arch	4" o.c. spacing
oval	12" o.c. spacing
octagon	7" o.c. spacing
pentoid	5" o.c. spacing
triangle	5" o.c. spacing
trapezoid	5" o.c. spacing

(P) Spacing of nails shall be (continued):
- evenly spaced between corner fasteners but not exceeding the o.c. spacing in head, sill and jambs for the following configurations at design pressures to 45 PSF,

eyebrow	9" o.c. spacing
half-eyebrow	9" o.c. spacing
fan	9" o.c. spacing
half-fan	7" o.c. spacing
full-circle	11" o.c. spacing
half-circle	9" o.c. spacing
half-circle arch	9" o.c. spacing
quarter-circle	7" o.c. spacing
quarter-circle arch	7" o.c. spacing
oval	17" o.c. spacing
octagon	11" o.c. spacing
pentoid	9" o.c. spacing
triangle	9" o.c. spacing
trapezoid	9" o.c. spacing

- tolerance is +/- 1", and
- this tolerance is applicable to the evenly spaced distance. 2
- Corner distance measured from frame/buck width or height dimension of frame.

(Q) Nails shall not be used to fasten assembly into end grain of wood.

DESIGN PRESSURE RATING & FBC CODE COMPLIANCE

(R) Installations depicted in these instructions acceptable for design pressures to 70 PSF with fastener spacing in Notes (L) and (P). Design Pressures (D.P.) are positive and negative. Overall window assembly design pressure may be less than 70 PSF and shall be determined in accordance with Note 13 of FLEX20100.
(S) Production Glazing may differ from that tested as allowed byANSI/AAMA/NWWDA 101/I.S. 2, 101/I.S. 2/NAFS or AAMA/WDMA/CSA 101/I.S. 2/A440 and applicable Building Code. See Note 12 and 13 on Drawing FLEX 20100 for further details.
(T) Structural two by wood and/or framing at the head, sill and jambs to be securely fastened to transfer the load to the wood structural substrate per the FBC and the engineer of record's details as applicable.
(U) See FLEX20100, Notes 10 to 15 for additional FBC Code Compliance.

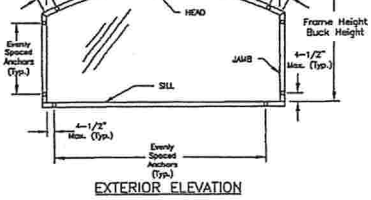

EXTERIOR ELEVATION

ANCHOR SPACING ILLUSTRATION
EYEBROW ARCH DESIGNER WINDOW

Florida Extruders Int'l., Inc.
2540 Jewett Lane - Sanford, FL 32771
407-323-3300 - 407-322-3507 (fax)
www.floridaextruders.com
Florida COA No. 9235

TITLE
Milestone Series 1000 & 2000
Non-Impact Resistant Aluminum Fin
Frame Designer Fixed Window
Installation Drawing for Wood
Substrate with Wood Screws or Nails

REVISIONS			
No.	Date	By	Description
0	12/20/06	RJA	Submitted For Approval
1	1/17/08	RJA	Revised Anchorage.
2	1/9/07	RJA	Added edge distance note.

Date: 1/9/07
Scale: NTS
Drawn By: RJA
Checked By: JH

Drawing No. FLEX28120
Sheet 2 of 2

Florida Product Approval # FL9242.2

FIXED

SHEET: WINf

FLORIDA EXTRUDERS
WINDOWS IN FRAME
3 of 7
RELEASE DATE: 09/03/08

Maronda Homes
(407) 321-0064 4005 MARONDA WAY SANFORD, FLORIDA

REVISIONS :
2-16-09 Updated to Code.

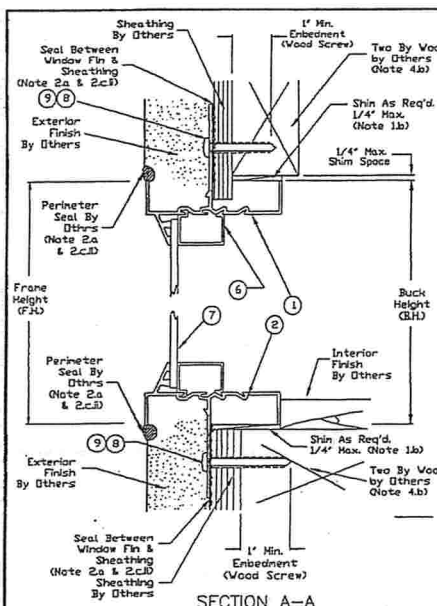

SECTION A–A

GENERAL NOTES

(1 to 15) See General Notes Drawing FLEX20100, Sheet 1 & 2.

(A) Milestone Series 2000 Fixed Aluminum Window is shown. Also applicable to Series 1000 Fixed Aluminum Windows.

(B) Drawing applicable to Non-Impact Resistant glazed windows.

(C) Production Glazing may differ from that tested as allowed by ANSI/AAMA/NWWDA 101/I.S. 2, 101/I.S. 2/NAFS or AAMA/WDMA/CSA 101/I.S. 2/A440 and applicable Building Code. See Note 12 and 13 on Drawing FLEX 20100 for further details.

(D) For Fastener Spacing see Elevation View on Sheet 1 and Notes (L) & (P) on Sheet 2 of this drawing. See Note (H) regarding deviations.

(E) Wood screw and nail withdrawal values used to generate the fastening requirements are based on Spruce-Pine-Fur with a Specific Gravity of 0.50. See Note (H) regarding deviations.

(F) Wood or tapping screw edge distance measured from edge of wood to centerline of wood or tapping screw must meet or exceed 1". Minimum size and embedment per Parts List. See Note (H) regarding deviations.

(G) Nail edge distance measured from edge of wood to centerline of nail must meet or exceed 9/16" or 5 times Shank Diameter, whichever is larger. Minimum size and embedment per Parts List. See Note (H) regarding deviations.

(H) Any deviation less than the minimum requirements stated must be approved by the manufacturer or engineered by "other" Design Professional in accordance with the applicable Building Code and Product Approval.

(I) All field supplied holes in the frame (if required) will be 3/16" in diameter for #8 wood screws or the shank diameter of the nail rounded up to the next standard designation drill bit size.

(J) Wood Screws and Nails SHALL NOT be mixed to fasten the same assembly.

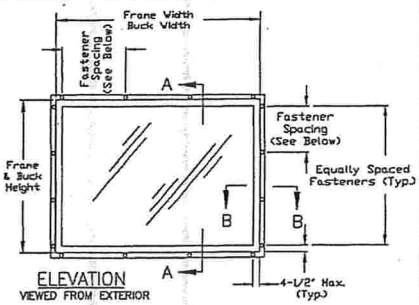

ELEVATION
VIEWED FROM EXTERIOR

Head, Sill & Jamb Anchor Spacing

Wood Screw – TO 70 PSF D.P.: 18" O.C. Max.

Nail
61 PSF TO 70 PSF D.P.: 5-1/2" O.C. Max.
51 PSF TO 60 PSF D.P.: 6-1/2" O.C. Max.
46 PSF TO 50 PSF D.P.: 8" O.C. Max.
41 PSF TO 45 PSF D.P.: 8-1/2" O.C. Max.
36 PSF TO 40 PSF D.P.: 9-1/2" O.C. Max.
TO 35 PSF D.P.: 12" O.C. Max.

DISCLAIMER: The purpose of this installation drawing is to present the manufacturer's recommendations for anchorage (i.e., wood screws, tapping screws, and nails) to achieve the design pressure specified on this fenestration product as required by the 2001 Florida Building Code (FBC), Section 1707.4.4, 2004 FBC-Building, Section 1714.5.4 and the 2004 FBC-Residential, Section R613.6. Recommendations regarding flashing, sealing, sealants or other joint sealant practices does not constitute a warranty either expressed or implied.

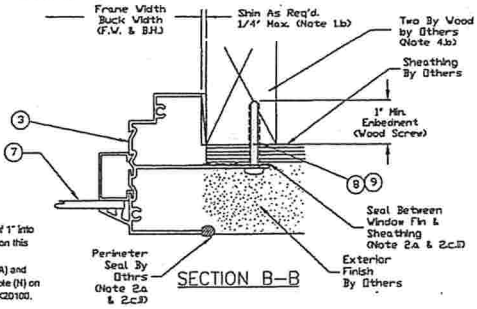

SECTION B–B

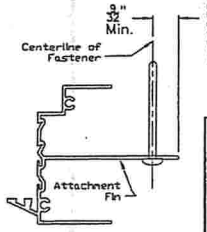

Wood Screw or Nail Head must be in full contact with Attachment Fin. Centerline of fastener shall be approximately 9/32" from edge of Attachment Fin.

DETAIL A

PARTS LIST

1 Head - FinFrame
2 Sill - Fin Frame
3 Jamb - Fin Frame
4 Not Used
5 Not Used
6 Glazing Bead
7 Glazing - See Note (B) and (C)
8 #8 Pan Head Wood or Tapping Screw with a minimum embedment of 1" into the structural wood substrate. See Note (K) on Sheet 2 and Detail A on this drawing and Note 4.b & 8 on Drawing FLEX20100.
9 Round Head Deformed Shank Nail with minimum 0.113" diameter (11 GA) and minimum embedment of 1-7/8" into the structural wood substrate. See Note (H) on Sheet 2 and Detail A on this drawing and Notes 4.b & 9 on Drawing FLEX20100.

Florida Extruders Int'l, Inc.
2540 Jewett Lane • Sanford, FL 32771
407-323-3300 • 407-322-2007 (fax)
www.fastenerstoolers.com
Florida COA No. 9235

TITLE
Milestone Series 1000 & 2000
Non-Impact Resistant Aluminum Fin Frame Fixed Window
Installation Drawing for Wood Substrate with Wood Screws or Nails

REVISIONS			
No.	Date	By	Description
0	12/27/95	RJA	Supersedes FLEX0005
1	1/14/02	RJA	Revised Fastener.
2	1/9/07	RJA	Revised Fastener.

Date: 1/9/07
Scale: NTS
Drawn By: RJA
Checked By: JH

Robert J. Amoruso, P.E.
Fl. License No. 49752

ROBERT JAMES AMORUSO LICENSE No. 49752 STATE OF FLORIDA PROFESSIONAL ENGINEER 1/9/07

Drawing No. FLEX27120
Sheet 1 of 2

FASTENER INSTALLATION INSTRUCTIONS – FLEX27120

#8 WOOD SCREWS:

(K) #8 Wood Screw must be of sufficient length to achieve minimum embedment of 1" into the two by wood framing.

(L) Spacing of wood screws shall be:
- 4-1/2" max. from each corner of the head, sill and jambs, and
- evenly spaced between corner fasteners but not exceeding 18" o.c. spacing for the head, sill and jambs as shown in Elevation View on Sheet 1 of this drawing.
- Tolerance is +/- 1". This tolerance is applicable to the evenly spaced distance. 2
- Corner distance measured from frame/buck width or height dimension of frame.

(M) Wood screws shall not be used to fasten assembly into end grain of wood.

NAILS:

(N) Nails shall meet the following requirements:
- 0.113" diameter or greater,
- sufficient length to achieve minimum embedment of 1 7/8" into the two by wood framing (generally, nail 2 3/8" length or greater shall meet this requirement), and
- helical (screw) or annular (ring) shank style only.

(O) Manufacturer's nails meeting these requirements are (but not limited to) the following:
- Paslode deformed shank nail, No. 404947, 404537, 650111 and 650148.
- Duro-Fast deformed shank nail No. 325.

(P) Spacing of nails shall be:
- 4-1/2" max. from each corner of the head, sill and jambs, and
- evenly spaced between corner fasteners and not exceeding o.c. spacing for the head, sill and jambs as shown in Elevation View on Sheet 1 of this drawing.
- Tolerance is +/- 1". This tolerance is applicable to the evenly spaced distance. 2
- Corner distance measured from frame/buck width or height dimension of frame.

(Q) Nails shall not be used to fasten assembly into end grain of wood.

DESIGN PRESSURE RATING & FBC CODE COMPLIANCE

(R) Installations depicted in these instructions acceptable for design pressures to 70 PSF with fastener spacing shown the Elevation View on Sheet 1 of this drawing for the following window sizes:
- to 52 1/8" x 95
- to 63" x 80"
- to 71" x 71"
- to 73" x 73"
- to 83" x 55 1/4"
- to 95" x 49 5/8"
- to 119" x 37 3/8"

Design Pressures (D.P.) are positive and negative. Overall window assembly design pressure may be less than 70 PSF and shall be determined in accordance with Note 13 of FLEX20100.

(S) Production Glazing may differ from that tested as allowed by ANSI/AAMA/NWWDA 101/I.S. 2, 101/I.S. 2/NAFS or AAMA/WDMA/CSA 101/I.S. 2/A440 and applicable Building Code. See Note 12 and 13 on Drawing FLEX 20100 for further details.

(T) Structural two by wood buck and/or framing at the head, sill and jambs to be securely fastened to transfer the load to the wood structural substrate per the FBC and the engineer of record's details as applicable.

(U) See FLEX20100, Notes 10 to 15 for additional FBC Code Compliance.

Florida Extruders Int'l, Inc.
2540 Jewett Lane • Sanford, FL 32771
407-323-3300 • 407-322-2007 (fax)
www.fastenerstoolers.com
Florida COA No. 9235

TITLE
Milestone Series 1000 & 2000
Non-Impact Resistant Aluminum Fin Frame Fixed Window
Installation Drawing for Wood Substrate with Wood Screws or Nails

REVISIONS			
No.	Date	By	Description
0	12/27/95	RJA	Supersedes FLEX0005
1	1/14/02	RJA	Revised Fastener.
2	1/9/07	RJA	Revised Fastener.

Date: 1/9/07
Scale: NTS
Drawn By: RJA
Checked By: JH

Drawing No. FLEX27120
Sheet 2 of 2

Florida Product Approval # FL9242.2

FIXED

SHEET: WINf

FLORIDA EXTRUDERS
WINDOWS IN FRAME
4 of 7
RELEASE DATE: 09/03/08

Maronda Homes
(407) 321-0064 4005 MARONDA WAY SANFORD, FLORIDA

REVISIONS :
3-11-08 Revised
2-16-09 Updated to Code.

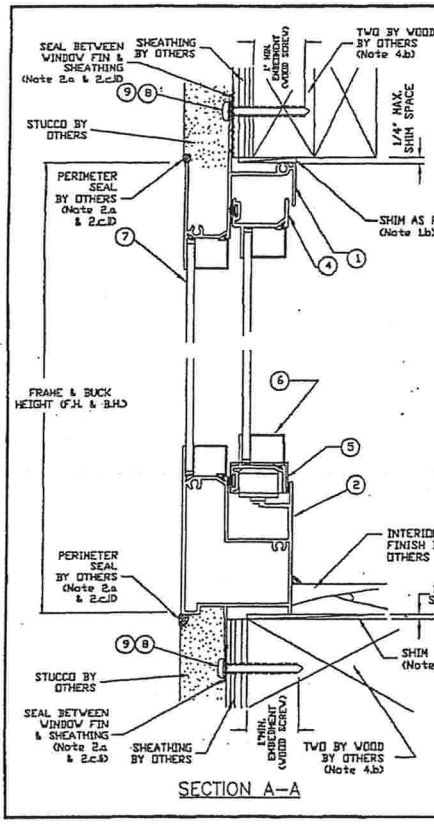

SECTION A–A

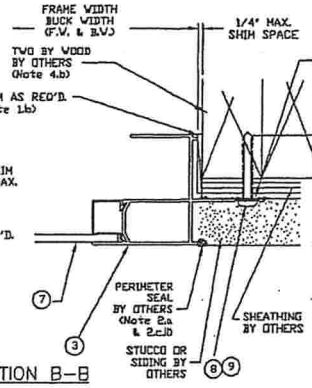

SECTION B–B

GENERAL NOTES

(1 to 15) See General Notes Drawing FLEX20100, Sheet 1 & 2.
(A) Milestone Series 1000 Horizontal Sliding Aluminum Window in XO, OX and XOX configurations are shown.
(B) Drawing applicable to Non-Impact Resistant glazed windows.
(C) Production Glazing may differ from that tested as allowed by ANSI/AAMA/NWWDA 101/I.S. 2, 101/I.S. 2/NAFS or AAMA/WDMA/CSA 101/I.S. 2/A440 and applicable Building Code. See Note 12 and 13 on Drawing FLEX 20100 for further details.
(D) For Fastener Locations see Sheet 2 of this drawing. See Note (H) regarding deviations.
(E) Wood screw and nail withdrawal values used to generate the fastening requirements are based on Spruce-Pine-Fir with a Specific Gravity of 0.50. See Note (H) regarding deviations.
(F) Wood or tapping screw edge distance measured from edge of wood to centerline of wood or tapping screw must meet or exceed 1". Minimum size and embedment per Parts List. See Note (H) regarding deviations.
(G) Nail edge distance measured from edge of wood to centerline of nail must meet or exceed 9/16" or 5 times Shank Diameter, whichever is larger. Minimum size and embedment per Parts List. See Note (H) regarding deviations.
(H) Any deviation less than the minimum requirements stated must be approved by the manufacturer or engineered by "other" Design Professional in accordance with the applicable Building Code and Product Approval.
(I) All field supplied holes in the frame (if required) will be 3/16" in diameter for #8 wood screws or the shank diameter of the nail rounded up to the next standard designation drill bit size.
(J) Wood Screws and Nails SHALL NOT be mixed to fasten the same assembly.

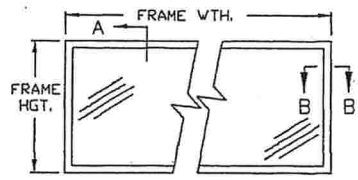

ELEVATION – VIEWED FROM EXTERIOR

DISCLAIMER: The purpose of this installation drawing is to present the manufacturer's recommendations for anchorage (i.e., wood screws, tapping screws and nails as applicable) to achieve the design pressure specified on the fenestration product as required by the 2001 Florida Building Code (FBC), Section 1707.4.4, 2004 FBC-Building, Section 1714.4.4 and the 2004 FBC-Residential, Section R613.6. Recommendations regarding flashing, sealing, sealants or other joint sealant practices does not constitute a warranty either expressed or implied.

PARTS LIST

1 Head - Fin Frame
2 Sill - Fin Frame
3 Jamb - Fin Frame
4 Head - Sash
5 Sill - Sash
6 Glazing Bead
7 Glazing - See Note (B) and (C)
8 #8 Pan Head Wood or Tapping Screw with a minimum embedment of 1" into the structural wood substrate. See Note (K to N) and Detail A on this drawing and Note 4.b & 8 on Drawing FLEX20100.
9 Round Head Deformed Shank Nail with minimum 0.113" diameter (11GA) and minimum embedment of 1-7/8" into the structural wood substrate. See Note (O to R) and Detail A on this drawing and Notes 4.b & 9 on Drawing FLEX20100.

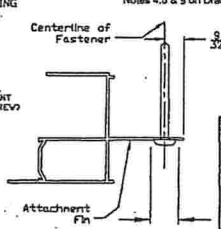

DETAIL A

Wood Screw or Nail Head must be in full contact with Attachment Fin. Centerline of fastener shall be approximately 9/32" from edge of Attachment Fin.

Florida Extruders Int'l., Inc.
2540 Jewett Lane - Sanford, FL 32771
407-323-3300 - 407-322-3507 (fax)
www.floridaextruders.com
Florida COA No. 9235

TITLE: Milestone Series 1000 Non-Impact Resistant Aluminum Fin Frame Horizontal Sliding Window Installation Drawing for Wood Substrate with Wood Screws or Nails

REVISIONS				
No.	Date	By	Description	Supersedes FLEX0038
0	3/27/03	RJA	Supersedes FLEX0038	
1	11/14/05	RJA	Revised Anchorage Connection Details	
2	1/04/07	RJA	Fenestration Details	

Dates 1/04/07
Scales NTS
Drawn By: RJA
Checked By: JH

Robert J. Amoruso, P.E.
FL License No. 49752

ROBERT JAMES AMORUSO LICENSE No. 49752 STATE OF FLORIDA PROFESSIONAL ENGINEER 1/4/07

Drawing No. FLEX25120
Sheet 1 of 2

No. 8 Wood and Tapping Screw Fastener Location Tables

Series 1000 Horizontal Slider XO/OX and XOX - Modular

JAMBS	Buck Height	No. Fasteners in each Jamb	Eb	Et	L1	L2
	23	2	8	6	n/a	n/a
	35	2	8	8	n/a	n/a
	47	3	6	6	23 1/2	n/a
	53	4	8	8	19 3/4	13 1/2
	59	4	8	8	21 3/4	16 1/2
	71	4	8	8	25 3/4	19 1/2

Series 1000 Horizontal Slider XO/OX - Modular

HEAD & SILL	Buck Width	No. Fasteners In Head & Sill	Fastener Location Es	Eh	L3
	23	4	4 1/8	4 1/8	8 1/4
	35	4	4 1/8	4 1/8	14 1/4
	47	4	4 1/8	4 1/8	20 1/4
	53	4	4 1/8	4 1/8	23 1/4
	59	4	4 1/8	4 1/8	26 1/4
	65	4	4 1/8	4 1/8	29 1/4
	71	4	4 1/8	4 1/8	32 1/4

Series 1000 Horizontal Slider XOX - Modular

HEAD & SILL	Buck Width	No. Fasteners In Head & Sill	Fastener Location Es	Eh	L4
	71	8	4 1/8	4 1/8	14 1/4
	83	8	4 1/8	4 1/8	14 1/4
	95	8	4 1/8	4 1/8	20 1/4
	107	8	4 1/8	4 1/8	26 1/4
	119	8	4 1/8	4 1/8	26 1/4

FASTENER INSTALLATION INSTRUCTIONS - FLEX25120

#8 WOOD SCREWS:
(K) See fastener location table and Elevation Views on this sheet for location of #8 Wood Screws.
(L) #8 Wood Screw must be of sufficient length to achieve minimum embedment of 1" into the two by wood framing.
(M) See Detail "A" on sheet 1 for approximate location of the wood screw in the attachment fin.
(N) Wood screws shall not be used to fasten assembly into end grain of wood.

NAILS:
(O) Nails shall meet the following requirements:
- 0.113" diameter or greater,
- sufficient length to achieve minimum embedment of 1 7/8" into the two by wood framing (generally, nail 2 3/8" length or greater shall meet this requirement), and
- helical (screw) or annular (ring) shank style only.

(P) Manufacturer's nails meeting these requirements are (but not limited to) the following:
- Paslode deformed shank nail, No. 404947, 404537, 650111 and 650148.
- Duro-Fast deformed shank nail No. 325.

(Q) Location of nails shall be (+/- 1" tolerance on spacing, edge distance is a maximum):
- 4" maximum from each corner of the head, sill and jambs or XO/OX & XOX configurations, and
- for the XO/OX Configuration, 7" O.C. Max. for Jamb, Head and Sill for 46 PSF to 60 PSF DP, or
- for the XO/OX Configuration, 9" O.C. Max. for Jamb, Head and Sill for 36 PSF to 45 PSF DP, or
- for the XO/OX Configuration, 12" O.C. Max. for Jamb, Head and Sill to 35 PSF DP, or
- for the XOX Configuration, 7" O.C. Max. for Jamb & 5" O.C. max. for Head and Sill for 46 PSF to 60 PSF DP, or
- for the XOX Configuration, 9" O.C. Max. for Jamb & 7" O.C. max. for Head and Sill for 36 PSF to 45 PSF DP, or
- for the XOX Configuration, 12" O.C. Max. for Jamb & 9" O.C. max. for Head and Sill to 35 PSF DP, and
- See Detail "A" on sheet 1 for approximate location of the nail in the attachment fin.

(R) Nails shall not be used to fasten assembly into end grain of wood.

DESIGN PRESSURE RATING & FBC CODE COMPLIANCE

(S) If exact window size is not listed in fastener location table, use fastener locations listed for next larger size.
(T) Installations depicted in these instructions acceptable for design pressures to 60 PSF for the window sizes shown in the table. Design Pressures (D.P.) are positive and negative. Overall window assembly design pressure may be less than 60 PSF and shall be determined in accordance with Note 13 of FLEX20100. Nailing schedule in Note (Q) for design pressures to 35 PSF, 45 PSF and 60 PSF.
(U) Production Glazing may differ from that tested as allowed by ANSI/AAMA/NWWDA 101/I.S. 2, 101/I.S. 2/NAFS or AAMA/WDMA/CSA 101/I.S. 2/A440 and applicable Building Code. See Note 12 and 13 on Drawing FLEX 20100 for further details.
(V) Structural two by wood buck and/or framing at the head, sill and jambs to be securely fastened to transfer the load to the wood structural substrate per the FBC and the engineer of record's details as applicable.
(W) See FLEX20100, Notes 10 to 15 for additional FBC Code Compliance.

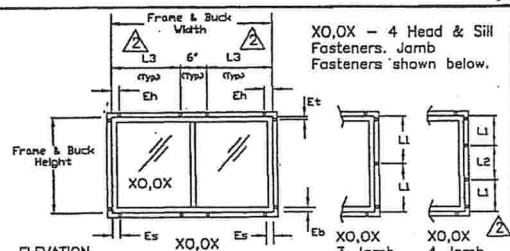

XO,OX – 4 Head & Sill Fasteners. Jamb Fasteners shown below.

ELEVATION VIEW, XO/OX — XO,OX 2 Jamb Fasteners — XO,OX 3 Jamb Fasteners — XO,OX 4 Jamb Fasteners

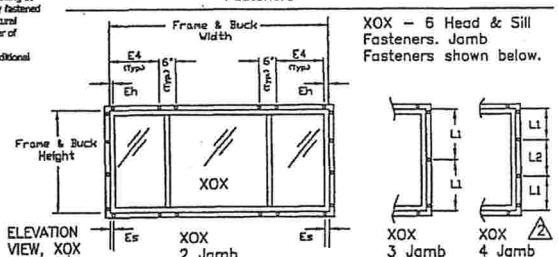

XOX – 6 Head & Sill Fasteners. Jamb Fasteners shown below.

ELEVATION VIEW, XOX — XOX 2 Jamb Fasteners — XOX 3 Jamb Fasteners — XOX 4 Jamb Fasteners

Fastener Location Table Notes:

1) All dimensions shown taken from the buck width or height of the window frame.
2) Based on size (buck width and height) and configuration (XO/OX or XOX) of the window to be installed, enter the correct table above to determine the locations of the No. 8 Wood or Tapping Screws in the head, sill and jambs.
3) Install the No. 8 Wood or Tapping Screws at the locations shown in the table. Tolerance is + / – 1" for spacing. Edge distance is a maximum.
4) This table is NOT applicable to the nailing option. See Notes O, P, Q, and R for nail installation locations and spacing.

Florida Extruders Int'l., Inc.
2540 Jewett Lane - Sanford, FL 32771
407-323-3300 - 407-322-3507 (fax)
www.floridaextruders.com
Florida COA No. 9235

TITLE: Milestone Series 1000 Non-Impact Resistant Aluminum Fin Frame Horizontal Sliding Window Installation Drawing for Wood Substrate with Wood Screws or Nails

REVISIONS				
No.	Date	By	Description	Supersedes FLEX0038
0	3/27/03	RJA	Supersedes FLEX0038	
1	11/14/05	RJA	Revised Anchorage Connection Details	
2	1/04/07	RJA	Fenestration Details	

Dates 1/04/07
Scales NTS
Drawn By: RJA
Checked By: JH

Drawing No. FLEX25120
Sheet 2 of 2

Florida Product Approval # FL9236.1

HORIZONTAL

SHEET: WINf

FLORIDA EXTRUDERS
WINDOWS IN FRAME
5 of 7
RELEASE DATE: 09/03/08

Maronda Homes
(407) 321-0064 4005 MARONDA WAY SANFORD, FLORIDA

REVISIONS :
2-16-09 Updated to Code.

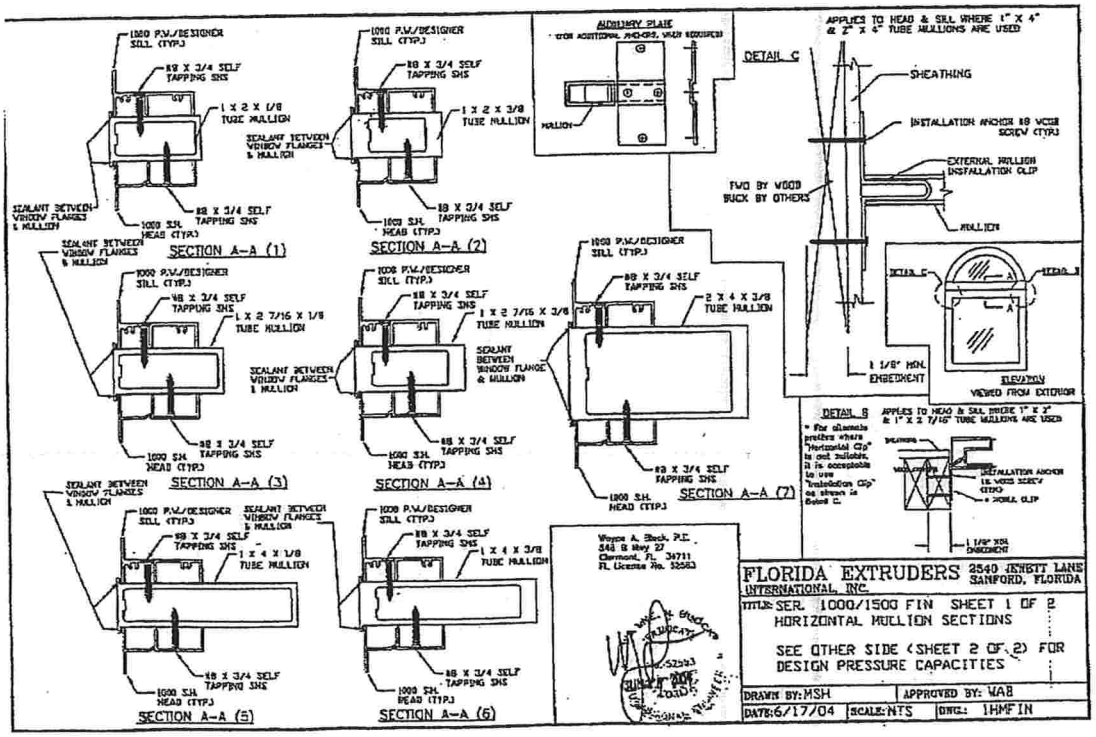

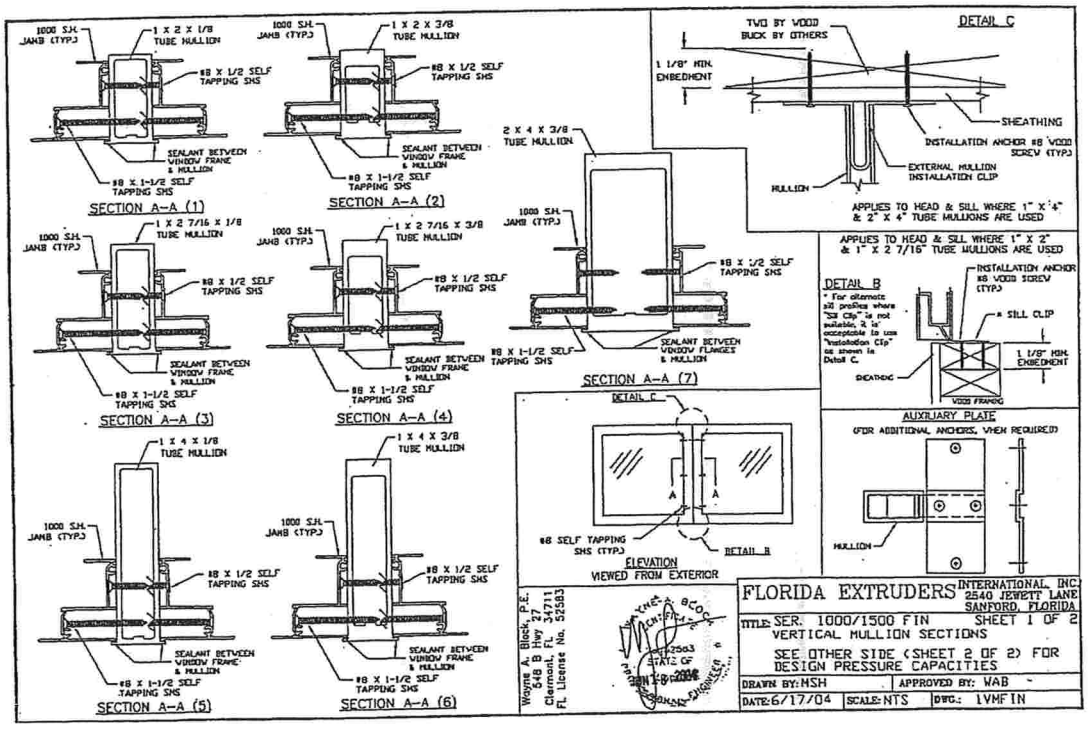

Florida Product Approval # FL3136-R3

MULLIONS

SHEET: WINf

FLORIDA EXTRUDERS

WINDOWS IN FRAME

6 of 7

RELEASE DATE: 09/03/08

Maronda Homes

(407) 321-0064 4005 MARONDA WAY SANFORD, FLORIDA

REVISIONS :

2-16-09 Updated to Code.

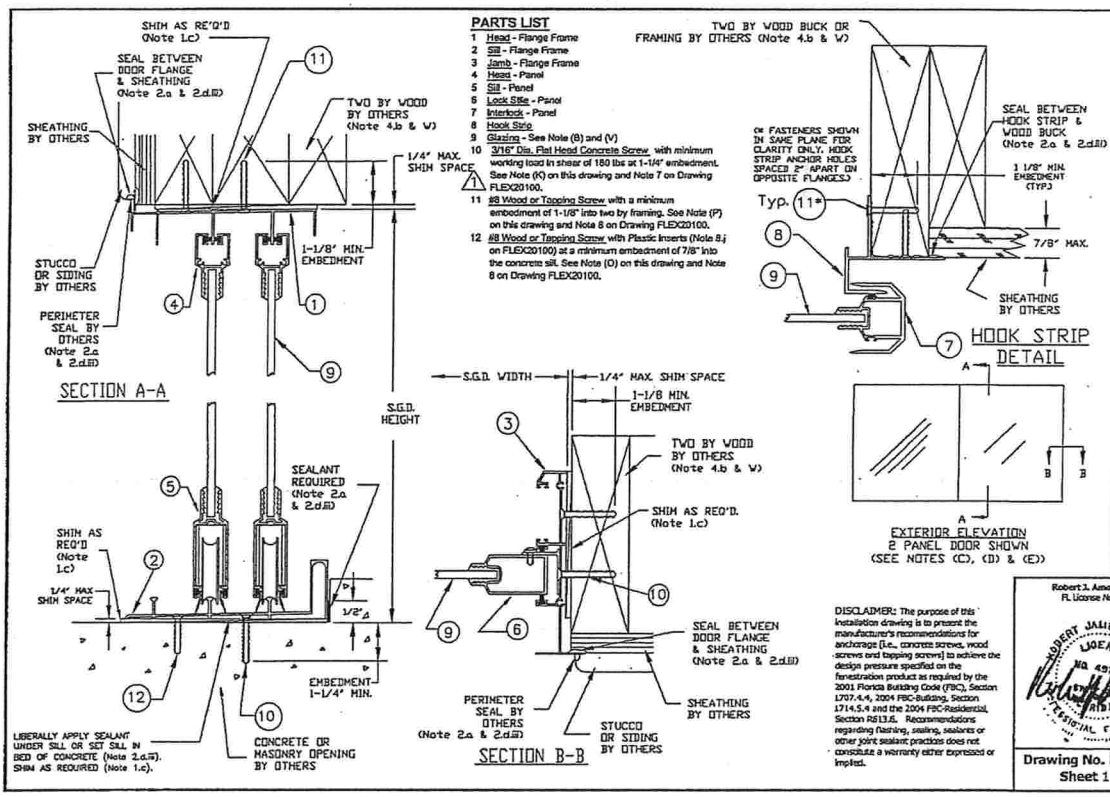

PARTS LIST

1. Head - Flange Frame
2. Sill - Flange Frame
3. Jamb - Flange Frame
4. Head - Panel
5. Sill - Panel
6. Lock Stile - Panel
7. Interlock - Panel
8. Hook Strip
9. Glazing - See Note (B) and (V)
10. 3/16" Dia. Flat Head Concrete Screw with minimum working load in shear of 180 lbs at 1-1/4" embedment. See Note (K) on this drawing and Note 7 on Drawing FLEX20100.
11. #8 Wood or Tapping Screw with a minimum embedment of 1-1/8" into two by framing. See Note (P) on this drawing and Note 8 on Drawing FLEX20100.
12. #8 Wood or Tapping Screw with Plastic Inserts (Note 8.j on FLEX20100) at a minimum embedment of 7/8" into the concrete sill. See Note (O) on this drawing and Note 8 on Drawing FLEX20100.

DISCLAIMER: The purpose of this installation drawing is to present the manufacturer's recommendations for anchorage (i.e., concrete screws, wood screws and tapping screws) to achieve the design pressure specified on the fenestration product as required by the 2001 Florida Building Code (FBC), Section 1707.4.4, 2004 FBC-Building, Section 1714.5.4 and the 2004 FBC-Residential Section R613.6. Recommendations regarding flashing, sealing, sealanes or other joint sealant practices does not constitute a warranty either expressed or implied.

Robert J. Amarusa, P.E.
FL License No. 49752

ROBERT JAMES AMARUSA LICENSE NO. 49752 STATE OF FLORIDA PROFESSIONAL ENGINEER
3/8/07

Drawing No. FLEX24111
Sheet 1 of 2

Florida Extruders Int'l., Inc.
2540 Jewett Lane - Sanford, FL 32771
407-323-3300 - 407-323-3507 (fax)
www.floridaextruders.com
Florida COA No. 9235

TITLE: Milestone Series 1000 & 2000 Non-Impact Resistant Aluminum Flange Frame Sliding Glass Door Installation Drawing for Concrete Sill w/Concrete Screws & Wood Substrate w/#8 Wood Screws

REVISIONS			
No.	Date	By	Description
0	12/27/06	RJA	Supersedes FLE00027
1	3/02/07	RJA	Revised for new testing

Date: 3/02/07
Scale: NTS
Drawn By: RJA
Checked By: JH

Fastener Installation Chart							
Size Code	Configuration	Size		Required Quantities of Fasteners			
		Width	Height	Jamb (No. 8 WS)	Head (No. 8 WS)	Sill (3/16" CS)	Hook Strip (No. 8 WS)
4068	XX, OX, XO	48	80	8	6	3 (D2)	8
5068	XX, OX, XO	60	80	8	6	3 (D2)	8
6068	XX, OX, XO	72	80	8	8	4 (D2)	8
8068	XX, OX, XO	96	80	8	10	5 (D2)	8
10068	XX, OX, XO	120	80	8	12	7 (D3)	8
5080	XX, OX, XO	60	96	10	6	3 (D2)	10
6080	XX, OX, XO	72	96	10	8	4 (D2)	10
8080	XX, OX, XO	96	96	10	10	5 (D2)	10
10080	XX, OX, XO	120	96	10	12	6 (D3)	10
60100	XX, OX, XO	60	120	12	6	3 (D2)	12
80100	XX, OX, XO	72	120	12	8	4 (D2)	12
80100	XX, OX, XO	96	120	12	10	5 (D2)	12
8068	OXO	109 1/8	80	8	10	5 (D1)	8
12068	OXO	145 1/8	80	8	14	8 (D2)	8
15068	OXO	181 1/8	80	8	16	12 (D4)	8
8080	OXO	109 1/8	96	10	10	7 (D2)	10
12080	OXO	145 1/8	96	10	14	10 (D3)	10
15080	OXO	181 1/8	96	10	16	14 (D5)	10
90100	OXO	109 1/8	120	12	10	7 (D3)	12
120100	OXO	145 1/8	120	12	14	11 (D4)	12
9068	XXX	109 5/8	80	8	10	6 (D1)	8
12068	XXX	142 5/8	80	8	14	9 (D2)	8
15068	XXX	175 5/8	80	8	16	12 (D4)	8
9080	XXX	109 5/8	96	10	10	6 (D1)	10
12080	XXX	142 5/8	96	10	14	10 (D3)	10
15080	XXX	175 5/8	96	10	16	14 (D6)	10
90100	XXX	109 5/8	120	12	10	7 (D3)	12
12100	XXX	142 5/8	120	12	14	11 (D4)	12
10068	OXXO	119 5/8	80	8	12	7 (D1)	8
12068	OXXO	143 5/8	80	8	14	9 (D2)	8
15068	OXXO	191 5/8	80	8	16	13 (D4)	8
10080	OXXO	119 5/8	96	10	12	8 (D2)	10
12080	OXXO	143 5/8	96	10	14	10 (D3)	10
15080	OXXO	191 5/8	96	10	16	15 (D6)	10
100100	OXXO	119 5/8	120	12	12	8 (D2)	12
120100	OXXO	143 5/8	120	12	14	11 (D4)	12
150100	OXXO	191 5/8	120	12	16	17 (D8)	12
10068	XXXX	177 1/4	80	8	12	7 (D1)	8
12068	XXXX	141 1/4	80	8	14	9 (D2)	8
16068	XXXX	189 1/4	80	8	16	13 (D4)	8
10080	XXXX	117 1/4	96	10	12	8 (D2)	10
12080	XXXX	141 1/4	96	10	14	10 (D3)	10
16080	XXXX	189 1/4	96	10	16	15 (D6)	10
100120	XXXX	117 1/4	120	12	12	8 (D2)	12
120100	XXXX	141 1/4	120	12	14	11 (D4)	12
160100	XXXX	189 1/4	120	12	16	17 (D8)	12

Fastener Installation Chart Notes:
1) In some cases concrete screws are only required in one of the factory applied installation hole sets (i.e., a hole set being the two holes lying in a plane perpendicular to the width of the door frame). In those cases designated as "OX" in the installation chart, one of the holes will receive a Concrete Screw and the remaining holes will be filled in accordance with Notes O and P.
2) In some cases concrete screws are required in both factory applied installation hole sets. "D1" through "D4" designates in which size & configurations two concrete screws are required. The remaining holes will be filled in accordance with Notes O and P.
a) "D1" means, install two concrete screws in one set of installation holes.
b) "D2" means, install two concrete screws in two sets of installation holes.
c) "D3" means, install two concrete screws in three sets of installation holes.
d) "D4" means, install two concrete screws in four sets of installation holes.
e) "D5" means, install two concrete screws in five sets of installation holes.
f) "D6" means, install two concrete screws in six sets of installation holes.
g) "D7" means, install two concrete screws in seven sets of installation holes.
h) "D8" means, install two concrete screws in eight sets of installation holes.
3) Location of additional concrete screws in head & sill should be prioritized as follows:
a) First adjacent to interlock or hook stiles in head & sill.
b) Secondly, at each end of head & sill near jamb corner, if needed.
c) Locations in head & sill other than as listed in a & b.
4) Location of additional concrete screws in jambs should be prioritized as follows:
a) First, adjacent to locks in jambs.
b) Secondly, at each end of jambs near head & sill corners.
c) Locations in jambs other than as listed in a & b.
5) CS = concrete screw and WS = wood screw

GENERAL NOTES

(1 to 15) See General Notes Drawing FLEX20100, Sheet 1 & 2.
(A) Milestone Series 1000 Sliding Glass Door is shown. Also applicable to Milestone Series 2000 Sliding Glass Door.
(B) Drawing applicable to Non-Impact Resistant Sliding Glass Doors glazed with 3/16" fully tempered glass. See Note (V).
(C) Where "X" represents moving panel and "O" represents fixed panel, approved configurations are as listed on the fastener installation chart on Sheet 2.
(D) Not all configurations listed on the fastener chart are shown on this drawing, however installation sections "A-A", "B-B" & Hook Strip Detail apply to installation of all approved configurations.
(E) For pocket door configurations, use closest by-pass door size and configuration in the chart to the finished opening of the pocket door.
(F) Concrete screw edge distance measured from edge of concrete/masonry/block to centerline of concrete screw must meet or exceed 2 1/4". Minimum size and embedment per Parts List. See Note (J) regarding deviations.
(G) Wood or tapping screw edge distance measured from edge of wood receiving the point to centerline of wood or tapping screw must meet or exceed 1". Minimum size and embedment per Parts List. See Note (J) regarding deviations.
(H) All field supplied holes in the frame (if required) will be 3/16" in diameter.
(I) Wood screw withdrawal values used to generate the fastening requirements are based on Spruce-Pine-Fur with a Specific Gravity of 0.50. See Note (J) regarding deviations.
(J) Any deviation less than the minimum requirements stated must be approved by the manufacturer or engineered by "other" Design Professional in accordance with the applicable Building Code and Product Approval.

FASTENER INSTALLATION INSTRUCTIONS - FLEX24111

3/16" DIA. CONCRETE SCREW WITH SILL:

(K) Where door is installed in an opening with a masonry or concrete sill, use a 3/16" diameter concrete screw of sufficient length to achieve minimum embedment of 1-1/4" into masonry or concrete. See "Parts List" on Sheet 1 of this drawing for concrete screw size, embedment and load requirements. See FLEX20100, Note 7 for additional concrete screw requirements.
(L) See fastener installation chart this sheet for concrete screw quantities and additional installation requirements.
(M) Install one concrete screw in each pair of factory applied installation holes unless noted otherwise on the fastener installation chart. It is acceptable to install a 3/16" diameter concrete screw with a 1-1/4" embedment in all holes in the sill which will exceed the minimum requirements of the Fastener Installation Chart.
(N) Alternate concrete screw installation fasteners front to back in the sill frame member when both sets of holes are not used.
(O) All remaining factory applied installation fastener holes in the sill not used for concrete screw installation shall be anchored with plastic anchors (see FLEX20100, Note 8.j for details) and #8 wood screws of sufficient length to provide min. 7/8" in. embedment into the concrete or masonry. See "Parts List" on Sheet 1 of this drawing for wood screw size and embedment requirements. See FLEX20100, Note 8 for additional wood screw requirements.

#8 WOOD SCREW WITH STRUCTURAL TWO BY WOOD BUCK FOR HEAD, JAMBS AND POCKET DOOR HOOK STRIP:

(P) Where the head, jambs and pocket door hook strip is installed in a wood opening with a structural two by wood buck and/or framing, use #8 wood screws of sufficient length to achieve 1-1/8" minimum embedment into the two by wood buck and/or framing receiving the point at all factory applied installation holes. See "Parts List" on Sheet 1 of this drawing for wood screw size and embedment requirements. See FLEX20100, Note 8 for additional wood screw requirements.
(Q) See fastener installation chart this sheet for #8 wood screw requirements in jamb(s), head and hook strip.
(R) Not used.
(S) Wood screws shall not be used to fasten assembly into end grain of wood.

DESIGN PRESSURE RATING & FBC CODE COMPLIANCE

(T) If exact door size is not listed in fastener installation chart, use fastener quantity listed for next larger size, for the appropriate design pressure required.
(U) Installations depicted in these instructions acceptable for design pressures to 55 PSF for the window sizes shown in the chart. Design Pressures (D.P.) are positive and negative. Overall window assembly design pressure may be less than that shown in the fastener quantity table and shall be determined in accordance with Note 13 of FLEX20100.
(V) Production Glazing may differ from that tested as allowed by ANSI/AAMA/NWWDA 101/I.S. 2, 101/I.S. 2/NAFS or AAMA/WDMA/CSA 101/I.S. 2/A440 and applicable Building Code. See Note 12 and 13 on Drawing FLEX 20100 for further details.
(W) Two by wood and/or framing to be securely fastened to transfer the load to the masonry, concrete or other structural substrate per the FBC and the engineer of record's details as applicable.
(X) See FLEX20100, Notes 10 to 15 for additional FBC Code Compliance.

Drawing No. FLEX24111
Sheet 2 of 2

Florida Extruders Int'l., Inc.
2540 Jewett Lane - Sanford, FL 32771
407-323-3300 - 407-323-3507 (fax)
www.floridaextruders.com
Florida COA No. 9235

TITLE: Milestone Series 1000 & 2000 Non-Impact Resistant Aluminum Flange Frame Sliding Glass Door Installation Drawing for Concrete Sill w/Concrete Screws & Wood Substrate w/#8 Wood Screws

REVISIONS			
No.	Date	By	Description
0	12/27/06	RJA	Supersedes FLE00027
1	3/02/07	RJA	Revised for new testing

Date: 3/02/07
Scale: NTS
Drawn By: RJA
Checked By: JH

Florida Product Approval # FL8409.2

SLIDING GLASS DOORS

SHEET: WIN6

FLORIDA EXTRUDERS
WINDOWS IN FRAME
7 of 7
RELEASE DATE: 09/03/08

Maronda Homes
(407) 321-0064 4005 MARONDA WAY SANFORD, FLORIDA

REVISIONS :
2-16-09 Updated to Code.

(H)

Certificate of ARI-Certified Performance

BAYBURY 3.0 / 2.5

9TM 03101

The following

Split System: Heat Pump with Remote Outdoor Unit-Air-Source

Outdoor Unit Model Number: N4H336A(G)KB* 3.0 TON

combined with

Indoor Unit Model Number: FEM4X36****

330 SW MULBERRY DR
LAKE CITY FL 32024

Manufactured by: TEMPSTAR

under the Trade/Brand name: 13 SEER N SERIES R410A HP

has been rated in accordance with

ARI Standard 210/240-2006 for UNITARY AIR-CONDITIONING AND AIR-SOURCE HEAT PUMP EQUIPMENT

and is certified by the Air-Conditioning, Heating, and Refrigeration Institute to meet

the following product performance ratings:

Cooling Capacity (Btuh):	34800
EER Rating (Cooling):	11.50
SEER Rating (Cooling):	14.00
Heating Capacity(Btuh) @ 47 F:	33800
Region IV HSPF Rating (Heating):	8.20
Heating Capacity(Btuh) @ 17 F:	21800

A * following a rating indicates a voluntary rerate of previously published data, unless accompanied with a WAS which indicates an involuntary rerate.

13 SEER PERFORMANCE CERTIFIED TM

ARI PERFORMANCE CERTIFIED

ARI Reference #:	**1350500**
Today's Date:	**3/22/2009**
Status:	**Active**

CERTIFIED RATINGS ARE VALID ONLY FOR THE PARTICULAR COMBINATION OF INDOOR AND OUTDOOR UNITS LISTED IN THE AIR-CONDITIONING, HEATING, AND REFRIGERATION INSTITUTE'S DIRECTORY OF CERTIFIED EQUIPMENT. VISIT WWW.AHRIDIRECTORY.ORG TO VERIFY THAT THIS COMBINATION IS AN ACTIVE LISTING AND THE DATA LISTED ON THIS CERTIFICATE IS ACCURATE. SEARCH ON THE ARI REFERENCE # TO QUICKLY LOCATE THIS COMBINATION IN THE DIRECTORY.

TERMS AND CONDITIONS

Certificate of ARI-Certified Performance

The following 9TM 03101

Split System: Heat Pump with Remote Outdoor Unit-Air-Source

Outdoor Unit Model Number: N4H330A(G)KB* 2.5 TON

combined with 330 SW MULBERRY DR,

Indoor Unit Model Number: FEM4X30****

Manufactured by: TEMPSTAR LAKE CITY FL

under the Trade/Brand name: 13 SEER N SERIES R410A HP 32024

has been rated in accordance with

ARI Standard 210/240-2006 for UNITARY AIR-CONDITIONING AND AIR-SOURCE HEAT PUMP EQUIPMENT

and is certified by the Air-Conditioning, Heating, and Refrigeration Institute to meet

the following product performance ratings:

Cooling Capacity (Btuh):	30000
EER Rating (Cooling):	11.50
SEER Rating (Cooling):	14.00
Heating Capacity(Btuh) @ 47 F:	30000
Region IV HSPF Rating (Heating):	8.20
Heating Capacity(Btuh) @ 17 F:	18300

A * following a rating indicates a voluntary rerate of previously published data, unless accompanied with a WAS which indicates an involuntary rerate.

ARI PERFORMANCE CERTIFIED TM

ARI Reference #:	**1295652**
Today's Date:	**3/22/2009**
Status:	**Active**

CERTIFIED RATINGS ARE VALID ONLY FOR THE PARTICULAR COMBINATION OF INDOOR AND OUTDOOR UNITS LISTED IN THE AIR-CONDITIONING, HEATING, AND REFRIGERATION INSTITUTE'S DIRECTORY OF CERTIFIED EQUIPMENT. VISIT WWW.AHRIDIRECTORY.ORG TO VERIFY THAT THIS COMBINATION IS AN ACTIVE LISTING AND THE DATA LISTED ON THIS CERTIFICATE IS ACCURATE. SEARCH ON THE ARI REFERENCE # TO QUICKLY LOCATE THIS COMBINATION IN THE DIRECTORY.

Maronda Systems

Maronda Systems 4005 Maronda Way Sanford FL 32771 (407) 321-0064 Fax (407) 321-3913
Engineer/Architect of Record: Tomas Ponce P.E. 367 Medallion PL. Chuluota, Fl. 32766 FL PE # 50068
Design Criteria: TPI Design: Matrix Analysis MiTek software

PLAN JOB #	LOT	ADDRESS	DIV/SUB	MODEL
9TM03101	31-1	330 SW MULBERRY DR	JAX-9TM	BBRM42B RIGHT

BAYBURY 'M' 4BED 2CAR

This structure was designed in accordance with, and meets the requirements of TPI standards and the FLORIDA 2007 BUILDING CODE for 140 M.P.H. Wind Zone. Truss loading is in accordance with ASCE 7-05. These trusses are designed for an enclosed building.

The Truss Engineering package for the above referenced site was generated by the Truss Designer/Architect/MiTek.
I, Tomas Ponce P.E. the Engineer of Record for the above referenced lot Have reviewed the package and confirmed that it matches the physical and structural Parameters found on the set of permit drawings.

Truss ID	Run Date	Drawing Reviewed	Truss ID	Run Date	Drawing Reviewed
Layout	03/10/09	04/20/09	V1X	02/04/09	03/12/09
BCSI-B1	2008	03/12/09	V2X	02/04/09	03/12/09
HIP TRUSS	02/09/09	03/12/09	V3X	02/04/09	03/12/09
VALLEY	02/09/09	03/12/09	V4X	02/04/09	03/12/09
TOE NAIL	02/09/09	03/12/09	V5X	02/04/09	03/12/09
H1X	02/04/09	03/12/09	V6X	02/04/09	03/12/09
H2X	02/04/09	03/12/09	V7X	02/04/09	03/12/09
H3X	02/04/09	03/12/09	V11X	02/04/09	03/12/09
H4X	02/04/09	03/12/09	V12X	02/04/09	03/12/09
H5X	02/04/09	03/12/09	**FLOOR TRUSSES**		
HGRD1X	02/04/09	03/12/09	Layout	10/04/07	03/12/09
HGRD2X	02/04/09	03/12/09	FA	02/05/09	03/12/09
S1X	02/04/09	03/12/09	FB	02/05/09	03/12/09
S1AX	02/04/09	03/12/09	FC	02/05/09	03/12/09
S1BX	02/04/09	03/12/09	FC-A	02/05/09	03/12/09
HS1X	02/04/09	03/12/09	FD	02/05/09	03/12/09
HSGRD1X	02/04/09	03/12/09	FE	02/05/09	03/12/09
JGRD1X	02/04/09	03/12/09	FF	02/05/09	03/12/09
JX	02/04/09	03/12/09	FG	02/05/09	03/12/09
JAX	02/04/09	03/12/09	FJ	02/05/09	03/12/09
JBX	04/20/09	04/20/09	FK	02/05/09	03/12/09
J1X	02/04/09	03/12/09	F1	02/05/09	03/12/09
J2X	02/04/09	03/12/09			
J3X	02/04/09	03/12/09			
JSGRD1X	02/04/09	03/12/09			
JSX	02/05/09	03/12/09			
JS1X	02/04/09	03/12/09			
JS2X	02/04/09	03/12/09	**INV #**	**DESC**	**QNTY**
JS3X	02/04/09	03/12/09	**50060.0114**	**THD48**	**3**
MGRD1X	02/05/09	03/12/09	**50060.0071**	**SUH28**	**1**
C2X	04/20/09	04/20/09	**50060.0110**	**JUS26**	**3**
			50060.0058	**THJ26**	**5**
			50060.0049	**THD28-2**	
			50060.0272	**THD179**	**1**
			SEAT PLATES		
			FLOOR SEAT PLATES		**37**

No. of Eng. Dwgs: 56

Roof Loads-

TC Live:	16.0 psf
TC Dead:	7.0 psf
BC Live:	10.0 psf
BC Dead:	10.0 psf
Total	43.0 psf

DurFac- Lbr:	1.25
DurFac- Plt:	1.25
O.C. Spacing:	24.0"

Floor Loads-

TC Live:	40.0 psf
TC Dead:	10.0 psf
BC Live:	0.0 psf
BC Dead:	5.0 psf
Total	55.0 psf

DurFac- Lbr:	1.00
DurFac- Plt:	1.00
O.C. Spacing:	24.0"

JUN 10 2009

DATE: _____

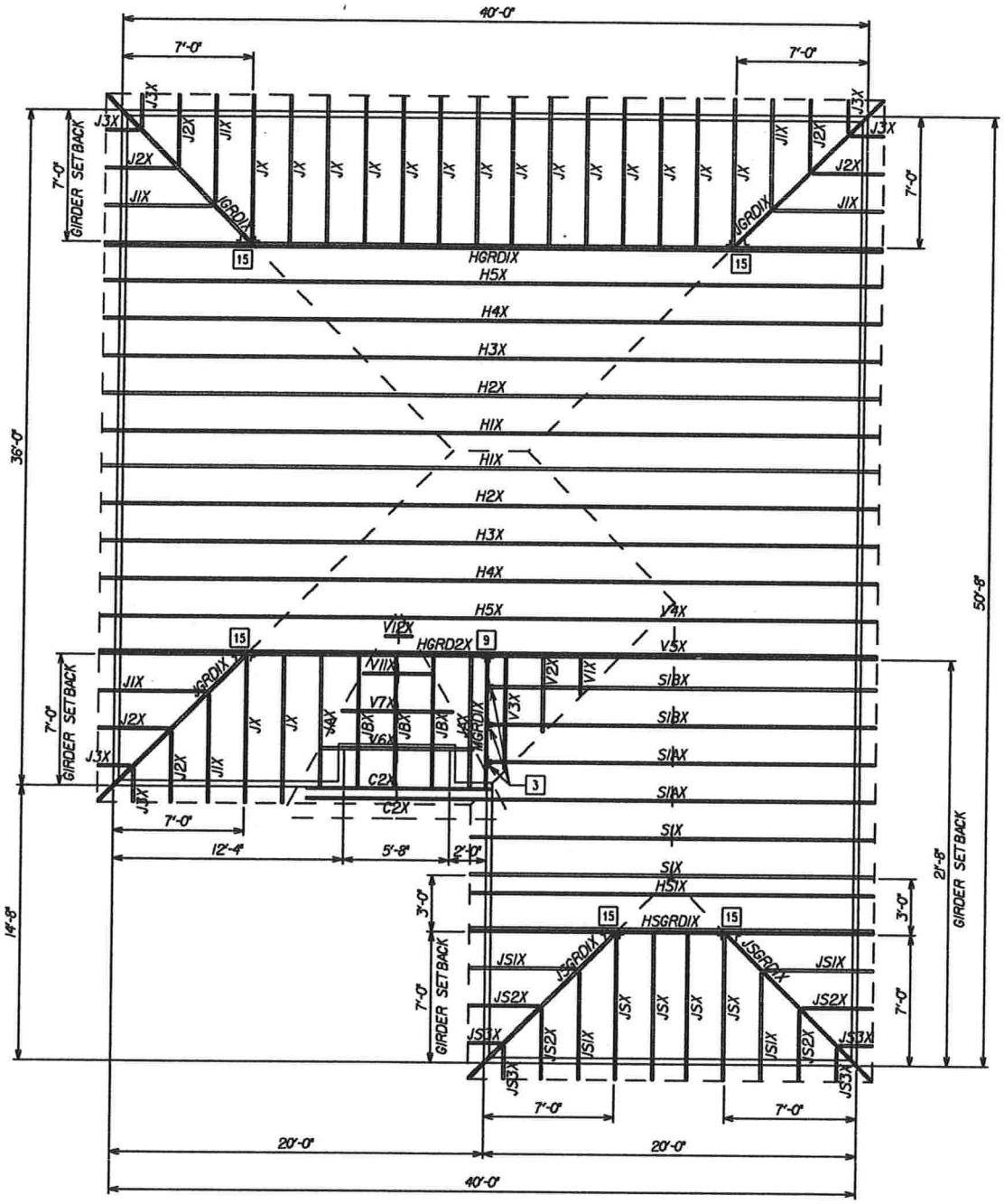

HARDWARE LEGEND

1	HUS26
2	HUS28
3	JUS26
4	MP6F
5	MPA1 & MPA1F
6	SKH26 L/R
7	SKHH26 L/R
8	SUS26
9	SUS28
10	THD26
11	THD28
12	THD28-2
13	THDH28-3
14	THD48
15	THJ26**
16	LTW12

JUN 10 2009

HARDWARE MANUFACTURED BY USP

* HARDWARE MANUFACTURED BY SIMPSON

** HARDWARE MANUFACTURED BY CLEVELAND

BAYBURY "M" - FL

GARAGE: RIGHT

DESIGNER: PARISI
CHECKER: MIKE
DRAWN BY: SARVER

SCALE: 1/8" = 1'-0"
DATE: 03/10/2009

LOADING-FRC2007/TPI2002

TC LIVE	16.00	SNOW LOAD	0.00
TC DEAD	7.00	LUMBER DOL	1.25
BC LIVE	0.00	PLATE DOL	1.25
BC DEAD	10.00	WIND	140
TOTAL	33.00	SPACING	2'-0"

Maronda Homes

(407) 321-0064 4005 MARONDA WAY SANFORD, FLORIDA

MITEK 2000 LAYOUT SYSTEM

1.800.848.3587 - mitek support@mii.com

.\permit_layouts\bbr_m_rg.trf Mar. 10, 2009 16:35:26

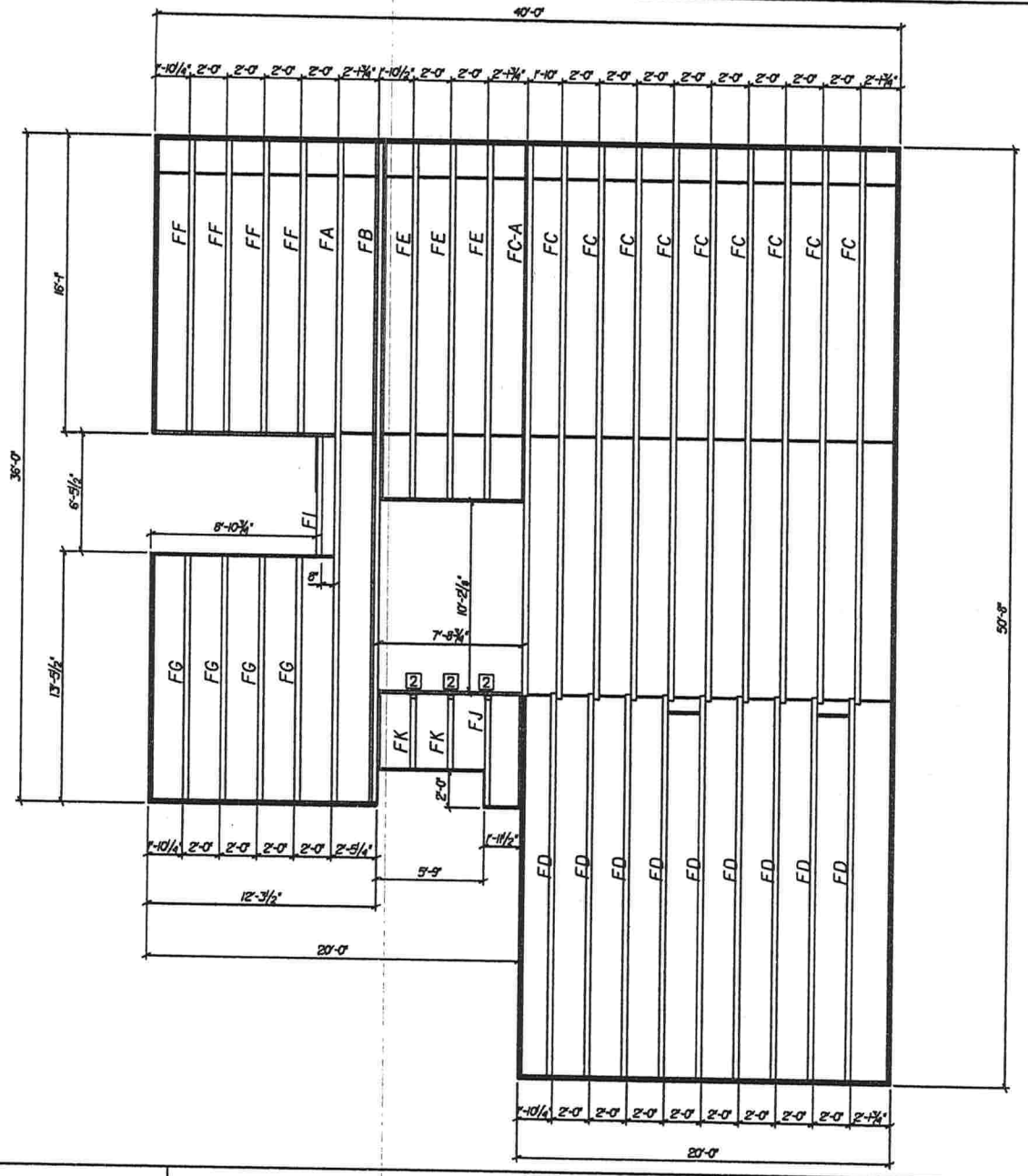

JUN 10 2009

PERMIT FT2	HARDWARE LEGEND HARDWARE MANUFACTURED BY USP 1 THD28-2 2 THD48 3 THD48-IF	BAYBURRY - FL 2 CAR GARAGE GARAGE : RIGHT	DESIGNER: J. Pitcock CHECKER: K. Cooper	SCALE: 1/8" = 1'-0" DATE: 10/04/07

LOADING-FRC2007/TPI2002

TC LIVE	40.00	SNOW LOAD	N/A
TC DEAD	10.00	LUMBER DOL	1.00
BC LIVE	0.00	PLATE DOL	1.00
BC DEAD	5.00	WIND	N/A
TOTAL	55.00	SPACING	2'-0"

MITEK 2000 LAYOUT SYSTEM

1.800.648.3587 - mitek support@mii.com

PLOT DATE: 6 MAR 2009

10/04/07 BAYBURRY-07-226.112 MO. 11. 2009 18:27:32

WARNING! BCSI-B1 SUMMARY SHEET - GUIDE FOR H

Spans over 60' may require complex permanent bracing. P

GENERAL NOTES

Trusses are not marked in any way to identify the frequency or location of temporary lateral restraint and diagonal bracing. Follow the recommendations for handling, installing and temporary restraining and bracing of trusses. Refer to BCSI Guide to Good Practice for Handling, Installing, Restraining & Bracing of Metal Plate Connected Wood Trusses*** for more detailed information.

Truss Design Drawings may specify locations of permanent lateral restraint or reinforcement for individual truss members. Refer to the BCSI-B3 Summary Sheet – Permanent Restraint/ Bracing of Chords & Web Members*** for more information. All other permanent bracing design is the responsibility of the Building Designer.

NOTAS GENERALES

Los trusses no están marcados de ningún modo que identifique la frecuencia o localización de restricción lateral y arriostre diagonal temporales. Use las recomendaciones de manejo, instalación, restricción y arriostre temporal de los trusses. Vea el folleto BCSI Guía de Buena Práctica para el Manejo, Instalación, Restricción y Arriostre de los Trusses de Madera Conectados con Placas de Metal*** para información más detallada.

Los dibujos de diseño de los trusses pueden especificar las localizaciones de restricción lateral permanente o refuerzo en los miembros individuales del truss. Vea la hoja resumen BCSI-B3 – Restricción/Arriostre Permanente de Cuerdas y Miembros Secundarios*** para más información. El resto de los diseños de arriostres permanentes son la responsabilidad del Diseñador del Edificio.

⚠ The consequences of improper handling, erecting, installing, restraining and bracing can result in a collapse of the structure, or worse, serious personal injury or death.

El resultado de un manejo, levantamiento, instalación, restricción y arrisotre incorrecto puede ser la caída de la estructura o aún peor, heridos o muertos.

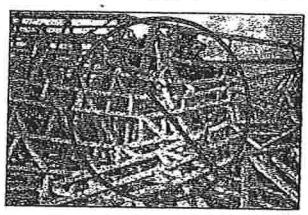

⚠ Banding and truss plates have sharp edges. Wear gloves when handling and safety glasses when cutting banding.

Empaques y placas de metal tienen bordes afilados. Lleve guantes y lentes protectores cuando corte los empaques.

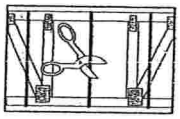

HANDLING — MANEJO

⚠ Avoid lateral bending. — Evite la flexión lateral.

⚠ Use special care in windy weather or near power lines and airports.

Utilice cuidado especial en días ventosos o cerca de cables eléctricos o de aeropuertos.

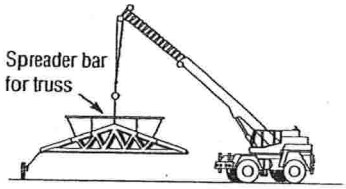

⚠ The contractor is responsible for properly receiving, unloading and storing the trusses at the jobsite.

El contratista tiene la responsabilidad de recibir, descargar y almacenar adecuadamente los trusses en la obra.

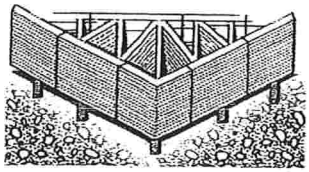

☑ If trusses are to be stored horizontally, place blocking of sufficient height beneath the stack of trusses at 8' to 10' on center.

For trusses stored for more than one week cover bundles to prevent moisture gain but allow for ventilation.

Refer to BCSI Guide to Good Practice for Handling, Installing, Restraining & Bracing of Metal Plate Connected Wood Trusses*** for more detailed information pertaining to handling and jobsite storage of trusses.

Si los trusses estarán guardados horizontalmente, ponga bloqueando de altura suficiente detrás de la pila de los trusses a 8' hasta 10 pies en el centro.

Para trusses guardados por más de una semana, cubra los paquetes para prevenir aumento de humedad pero permita ventilación.

Vea el folleto BCSI Guía de Buena Práctica para el Manejo, Instalación, Restricción y Arriostre de los Trusses de Madera Conectados con Placas de Metal*** para información más detallada sobre el manejo y almacenaje de los trusses en área de trabajo.

☑ Use proper rigging and hoisting equipment.

Use equipo apropiado para levantar e improvisar.

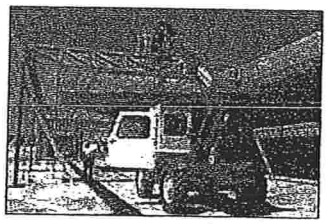

⊘ Do not store unbraced bundles upright.

No almacene verticalmente los trusses sueltos.

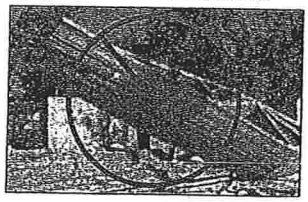

⊘ Do not store on uneven ground.

No almacene en tierra desigual.

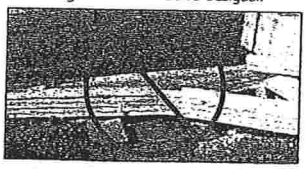

HOISTING RECOMMENDATIONS FOR TRUSS BUNDLES
RECOMENDACIONES PARA LEVANTAR PAQUETES DE TRUSSES.

⚠ Warning! Don't overload the crane.

¡Advertencia! ¡No sobrecargue la grúa!

⊘ Never use banding alone to lift a bundle. Do not lift a group of individually banded bundles.

Nunca use sólo los empaques para levantar un paquete. No levante un grupo de paquetes empaqueandos individualmentes.

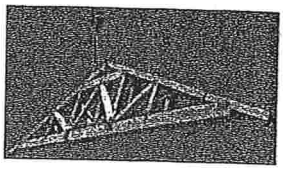

☑ A single lift point may be used for bundles with trusses up to 45'.

Two lift points may be used for bundles with trusses up to 60'.

Use at least 3 lift points for bundles with trusses greater than 60'.

Puede usar un solo lugar de levantar para paquetes de trusses hasta 45 pies.

Puede usar dos puntos de levantar para paquetes hasta 60 pies.

Use por lo menos tres puntos de levantar para paquetes más de 60 pies.

⚠ Warning! Do not over load supporting structure with truss bundle.

¡Advertencia! No sobrecargue la estructura apoyada con el paquete de trusses.

☑ Place truss bundles in stable position.

Puse paquetes de trusses en una posición estable.

INSTALLATION OF SINGLE TRUSSES BY HAND
INSTALACIÓN DE TRUSSES INDIVIDUALES POR LA MANO

☑ Trusses 20' or less, support at peak.

Soporte del pico los trusses de 20 pies o menos.

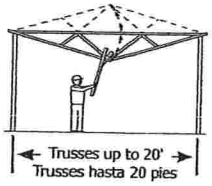

☑ Trusses 30' or less, support at quarter points.

Soporte de los cuartos de tramo los trusses de 30 pies o menos.

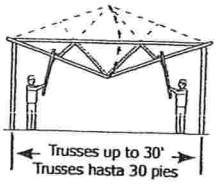

HOISTING OF SINGLE TRUSSES — LEVANTAMIENTO DE TRUSSES INDIVIDUALES

☑ Hold each truss in position with the erection equipment until top chord temporary lateral restraint is installed and the truss is fastened to the bearing points.

Sostenga cada truss en posición con equipo de grúa hasta que la restricción lateral temporal de la cuerda superior esté instalado y el truss está asegurado en los soportes.

⚠ Warning! Using a single pick-point at the peak can damage the truss.

¡Advertencia! El uso de un solo lugar en el pico para levantar puede hacer daño al truss.

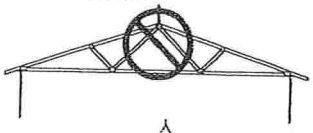

HOISTING RECOMMENDATIONS FOR SINGLE TRUSSES

RECOMENDACIONES PARA LEVANTAR TRUSSES INDIVIDUALES

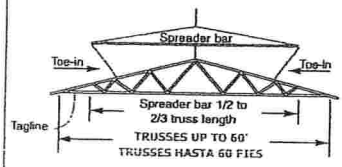

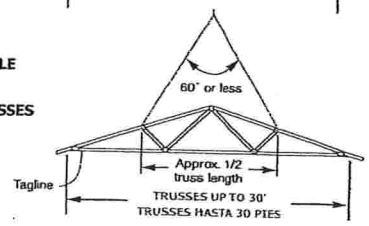

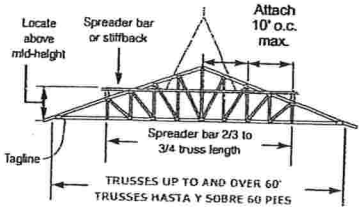

TEMPORARY RESTRAINT & BRACING
RESTRICCIÓN Y ARRIOSTRE TEMPORAL

⚠ Refer to BCSI-B2 Summary Sheet – Truss Installation & Temporary Restraint/Bracing*** for more information.

Vea el resumen BCSI-B2 - Instalación de Trusses y Restricción/Arriostre Temporal*** para más información.

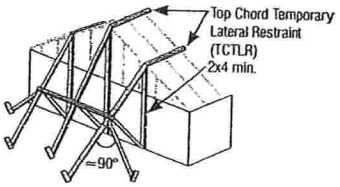

☑ Locate ground braces for first truss directly in line with all rows of top chord temporary lateral restraint (see table in the next column).

Coloque los arriostres de tierra para el primer truss directamente en línea con cada una de las filas de restricción lateral temporal de la cuerda superior (vea la tabla en la próxima columna).

⊘ Do not walk on unbraced trusses.

No camine en trusses sueltos.

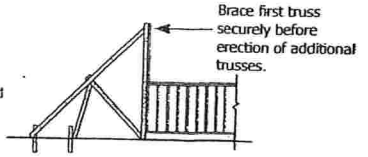

HANDLING, INSTALLING, RESTRAINING AND BRACING OF TRUSSES

Please always consult a Professional Engineer.

STEPS TO SETTING TRUSSES
LAS MEDIDAS DE LA INSTALACIÓN DE LOS TRUSSES

1) Install ground bracing. 2) Set first truss and attach securely to ground bracing. 3) Set next 4 trusses with short member temporary lateral restraint (see below). 4) Install top chord diagonal bracing (see below). 5) Install web member plane diagonal bracing to stabilize the first five trusses (see below). 6) Install bottom chord temporary lateral restraint and diagonal bracing (see below). 7) Repeat process on groups of four trusses until all trusses are set.

1) Instale los arriostres de tierra. 2) Instale el primero truss y ate seguramente al arriostre de tierra. 3) Instale los próximos 4 trusses con restricción lateral temporal de miembro corto (vea abajo). 4) Instale el arriostre diagonal de la cuerda superior (vea abajo). 5) Instale arriostre diagonal para los planos de los miembros secundarios para estabilice los primeros cinco trusses (vea abajo). 6) Instale la restricción lateral temporal y arriostre diagonal para la cuerda inferior (vea abajo). 7) Repita éste procedimiento en grupos de cuatro trusses hasta que todos los trusses estén instalados.

Refer to BCSI-B2 Summary Sheet – Truss Installation & Temporary Restraint/Bracing*** for more information.

Vea el resúmen BCSI-B2 - Instalación de Trusses y Restricción/Arriostre Temporal*** para más información.

RESTRAINT/BRACING FOR ALL PLANES OF TRUSSES
RESTRICCIÓN/ARRIOSTRE PARA TODOS PLANOS DE TRUSSES

This restraint & bracing method is for all trusses except 3x2 and 4x2 parallel chord trusses.

Este método de restricción y arriostre es para todo trusses excepto trusses de cuerdas paralelas 3x2 y 4x2.

1) TOP CHORD — CUERDA SUPERIOR

Truss Span Longitud de Tramo	Top Chord Temporary Lateral Restraint (TCTLR) Spacing Espaciamiento del Arriostre Temporal de la Cuerda Superior
Up to 30' Hasta 30 pies	10' o.c. max. 10 pies máximo
30' to 45' 30 a 45 pies	8' o.c. max. 8 pies máximo
45' to 60' 45 a 60 pies	6' o.c. max. 6 pies máximo
60' to 80'* 60 a 80 pies*	4' o.c. max. 4 pies máximo

*Consult a Professional Engineer for trusses longer than 60'.
*Consulte a un Ingeniero Profesional para trusses más de 60 pies.

See BCSI-B2*** for TCTLR options.
Vea el BCSI-B2*** para las opciones de TCTLR.

Refer to BCSI-B3 Summary Sheet – Permanent Restraint/Bracing of Chords & Web Members*** for Gable End Frame restraint/bracing/ reinforcement information.

Para información sobre restricción/arriostre/refuerzo para Armazones Hastiales vea el resumen BCSI-B3 – Restricción/Arriostre Permanente de Cuerdas y Miembros Secundarios.***

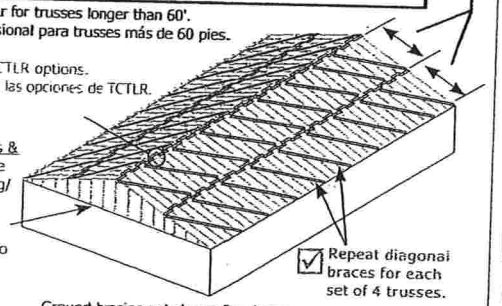

Ground bracing not shown for clarity.

Repeat diagonal braces for each set of 4 trusses.

Repita los arrisotres diagonales para cada grupo de 4 trusses.

2) WEB MEMBER PLANE — PLANO DE LOS MIEMBROS SECUNDARIOS

LATERAL RESTRAINT & DIAGONAL BRACING ARE VERY IMPORTANT
¡LA RESTRICCIÓN LATERAL Y EL ARRIOSTRE DIAGONAL SON MUY IMPORTANTES!

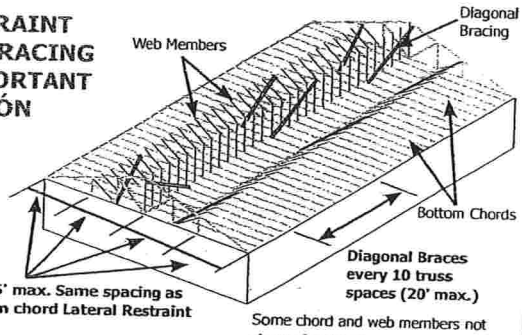

10'-15' max. Same spacing as bottom chord Lateral Restraint

Some chord and web members not shown for clarity.

3) BOTTOM CHORD — CUERDA INFERIOR

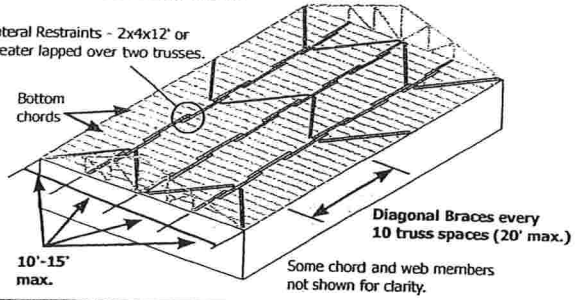

RESTRAINT & BRACING FOR 3x2 AND 4x2 PARALLEL CHORD TRUSSES
RESTRICCIÓN Y ARRIOSTRE PARA TRUSSES DE CUERDAS PARALELAS 3X2 Y 4X2

Refer to BCSI-B7 Summary Sheet - Temporary & Permanent Restraint/ Bracing for Parallel Chord Trusses*** for more information.

Vea el resumen BCSI-B7 – Restricción/ Arriostre Temporal y Permanente para Trusses de Cuerdas Paralelas*** para más información.

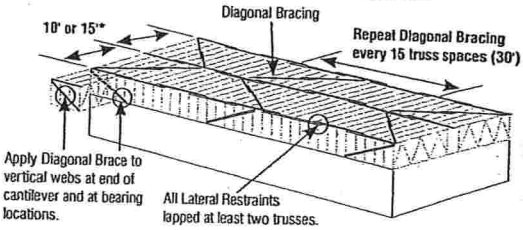

*Top chord Temporary Lateral Restraint spacing shall be 10' o.c. max. for 3x2 chords and 15' o.c. for 4x2 chords.

INSTALLING — INSTALACIÓN

Tolerances for Out-of-Plane.
Tolerancias para Fuera-de-Plano.

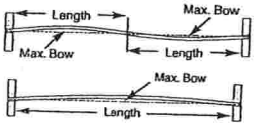

Tolerances for Out-of-Plumb.

Tolerancias para Fuera-de-Plomada.

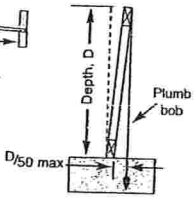

Out of Plumb	
D/50	D (ft.)
1/4"	1'
1/2"	2'
3/4"	3'
1"	4'
1-1/4"	5'
1-1/2"	6'
1-3/4"	7'
2"	≥8'

Out of Plane	
Max. Bow	Truss Length
3/4"	12.5'
7/8"	14.6'
1"	16.7'
1-1/8"	18.8'
1-1/4"	20.8'
1-3/8"	22.9'
1-1/2"	25.0'
1-3/4"	29.2'
2"	≥33.3'

CONSTRUCTION LOADING — CARGA DE CONSTRUCCIÓN

Do not proceed with construction until all lateral restraint and bracing is securely and properly in place.

No proceda con la construcción hasta que todas las restricciones laterales y los arriostres estén colocados en forma apropiada y segura.

Do not exceed maximum stack heights. Refer to BCSI-B4 Summary Sheet - Construction Loading*** for more information.

No exceda las alturas máximas de montón. Vea el resumen BCSI-B4 Carga de Construcción*** para más información.

Maximum Stack Height for Material on Trusses	
Material	Height
Gypsum Board	12"
Plywood or OSB	16"
Asphalt Shingles	2 bundles
Concrete Block	8"
Clay Tile	3-4 tiles high

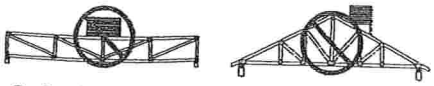

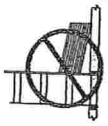

Do not overload small groups or single trusses.
No sobrecargue pequeños grupos o trusses individuales.

Never stack materials near a peak.
Nunca amontone los materiales cerca de un pico.

Place loads over as many trusses as possible.
Coloque las cargas sobre tantos trusses como sea posible.

Position loads over load bearing walls.
Coloque las cargas sobre las paredes soportantes.

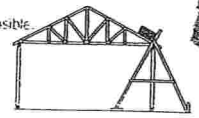

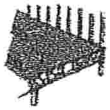

Truss bracing not shown for clarity.

ALTERATIONS — ALTERACIONES

Refer to BCSI-B5 Summary Sheet - Truss Damage, Jobsite Modifications & Installation Errors.***

Vea el resumen BCSI-B5 Daños de Trusses, Modificaciones en la Obra y Errores de Instalación.***

Do not cut, alter, or drill any structural member of a truss unless specifically permitted by the Truss Design Drawing.

No corte, altere o perfore ningún miembro estructural de un truss, a menos que esté específicamente permitido en el Dibujo del Diseño del Truss.

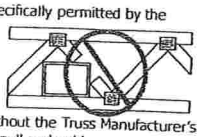

Trusses that have been overloaded during construction or altered without the Truss Manufacturer's prior approval may render the Truss Manufacturer's limited warranty null and void.

Trusses que se han sobrecargado durante la construcción o han sido alterados sin la autorización previa del Fabricante de Trusses, pueden hacer nulo y sin efecto la garantía limitada del Fabricante de Trusses.

Contact the Component Manufacturer for more information or consult a Professional Engineer for assistance.
To view a non-printing PDF of this document, visit www.sbcindustry.com/b1.

NOTE: The Truss Manufacturer and Truss Designer rely on the presumption that the Contractor and crane operator (if applicable) are professionals with the capability to undertake the work they have agreed to do on any given project. If the Contractor believes it needs assistance in some aspect of the construction project, it should seek assistance from a competent party. The methods and procedures outlined in this document are intended to ensure that the overall construction techniques employed will put the trusses into place SAFELY. These recommendations for handling, installing, restraining and bracing trusses are based upon the collective experience of leading personnel involved with truss design, manufacture and installation, but must, due to the nature of responsibilities involved, be presented only as a GUIDE for use by a qualified Building Designer or Contractor. It is not intended that these recommendations be interpreted as superior to the Building Designer's design specification for handling, installing, restraining and bracing trusses and it does not preclude the use of other equivalent methods for restraining/bracing and providing stability for the walls, columns, floors, roofs and all the interrelated structural building components as determined by the Contractor. Thus, WTCA and TPI expressly disclaim any responsibility for damages arising from the use, application, or reliance on the recommendations and information contained herein.

WTCA
6300 Enterprise Lane • Madison, WI 53719
608/274-4849 • www.sbcindustry.com

TRUSS PLATE INSTITUTE
218 N. Lee St., Ste. 312 • Alexandria, VA 22314
703/683-1010 • www.tpinst.org

B1WARN11x17 070724

PARA EL MANEJO, INSTALACIÓN, RESTRICCIÓN

HIP TRUSS BLOCKING REQUIREMENTS

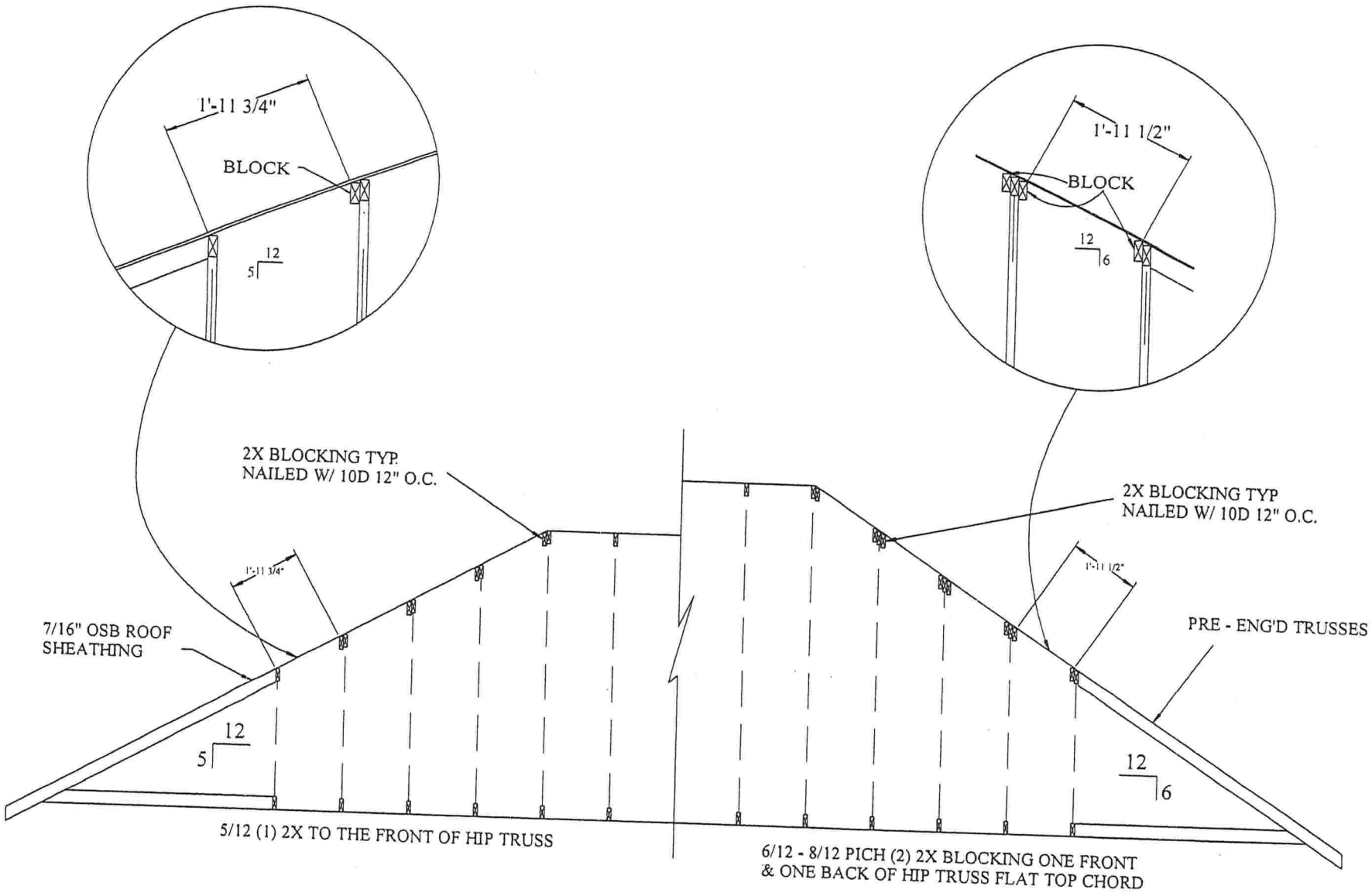

NOTE: NO BLOCKING IS REQUIRED ON 4/12 AND BELOW PITCHED ROOFS

REVISIONS:

Maronda Homes
(877) 321-0064 4005 MARONDA WAY SANFORD, FLORIDA

TRUSS DETAILS
HIP TRUSS BLOCKING
GARAGE
DRAWN BY:
RELEASE DATE: 2/9/09

SHEET:
HB1

PLOT DATE:

TOE-NAILED CONNECTIONS AT BEARING LOCATIONS

TYPICAL CORNER FRAMING

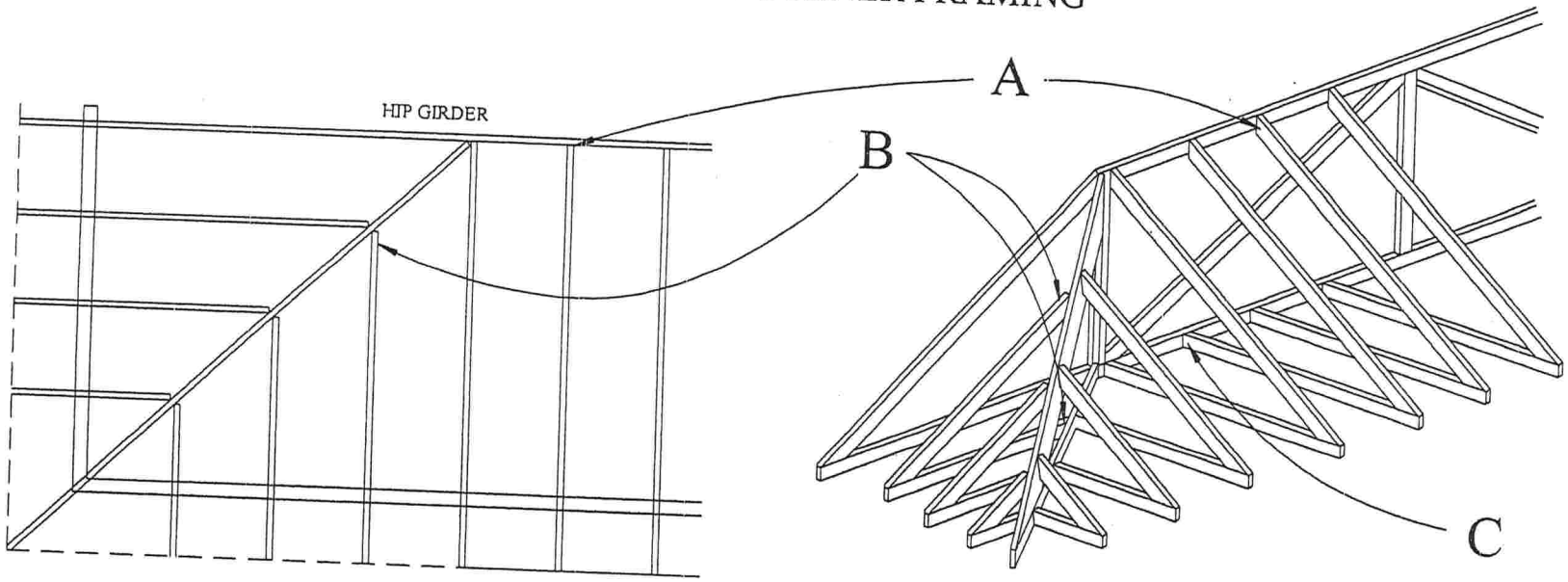

90 DEGREE ANGLE/SQUARE CUT

Connection at A

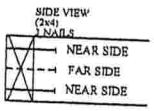

Connection at C

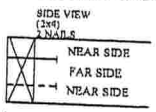

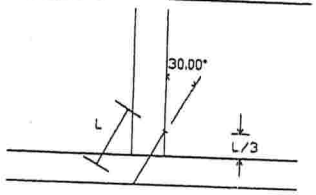

10d (0.131" x 3") nails

45 DEGREE ANGLE / SQUARE CUT

Connection at B

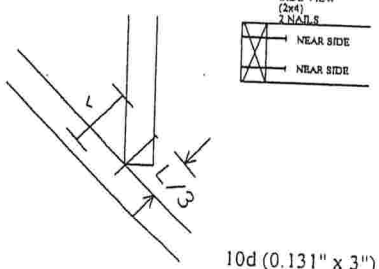

10d (0.131" x 3") nails

CONNECTION VALUES:

	GRAVITY	UPLIFT
(3)10D	222	355
(3)16D	383	614

Wind loading: Basic wind speed is 140 MPH.
Exposure catagory B or C.
Occupancy catagory II
4.8 psf top chord dead load.
4.2 psf bottom chord dead load.
25' roof height.
MWFRS gable end zone.
Enclosed building (Cond. I)
FBCR-07,TPI-02, ASCE 7-05
Duration of load is 1.60
L= NAIL LENGTH

REVISIONS

Maronda Homes
(407) 321-0064 4005 MARONDA WAY SANFORD, FLORIDA

TRUSS DETAILS
TOE-NAILED CONNECTIONS
DRAWN BY:
GARAGE:
RELEASE DATE: 2/9/09

SHEET:
TN1

PLOT DATE:

VALLEY CONNECTIONS

(ELEMENTS NOT SHOWN FOR CLARITY)

Notes: Valley trusses can be installed either a top main body roof trusses or a top 7/16 sheathing. Connections of strapping remain the same as illustrated. Valley kats are required when a top main body truss option is utilized.

See truss engineering and stanard details for truss bracing requirements.

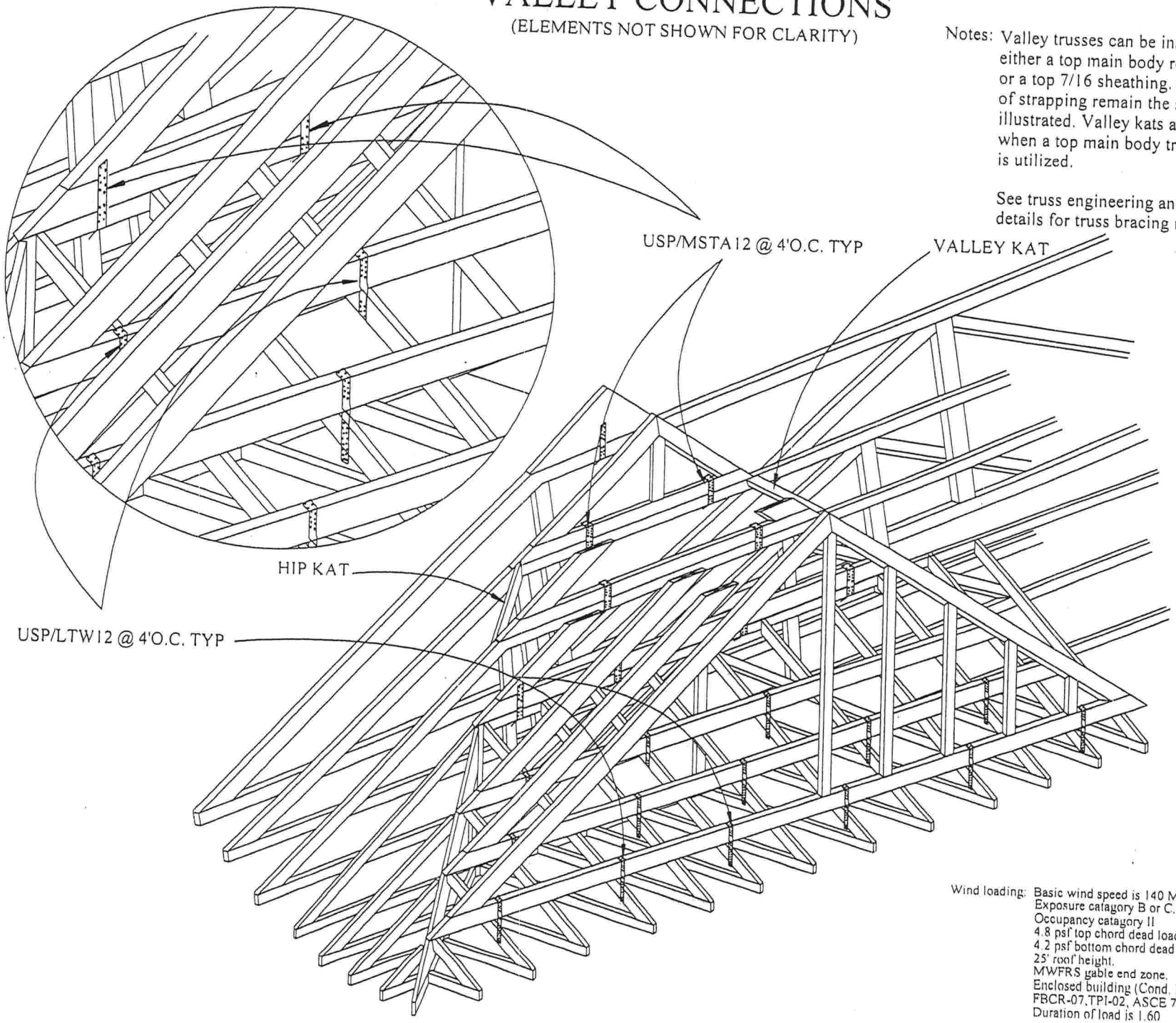

Wind loading: Basic wind speed is 140 MPH.
Exposure catagory B or C.
Occupancy catagory II
4.8 psf top chord dead load.
4.2 psf bottom chord dead load.
25' roof height.
MWFRS gable end zone.
Enclosed building (Cond. I)
FBCR-07,TPI-02, ASCE 7-05
Duration of load is 1.60

REVISIONS:

Maronda Homes
(407) 321-6064 4005 MARONDA WAY SANFORD, FLORIDA

TRUSS DETAILS

VALLEY CONNECTIONS

DRAWN BY: J.FESSIA | GARAGE:

RELEASE DATE: 2/9/09

SHEET: VC1

PLOT DATE:

Job	Truss	Truss Type	Qty	Ply	BAYBURY_140_FLORIDA
BAYBURY	H1X	HIP	2	1	Job Reference (optional)

Maronda Homes Inc., Sanford, FL

7.110 s Dec 15 2008 MiTek Industries, Inc. Wed Feb 04 15:05:22 2009 Page 1

17-5-12 | 6-4-9 | 12-1-9 | 17-10-8 | 23-10-8 | 29-7-7 | 35-4-7 | 41-9-0 | 17-5-12

6-4-9 | 5-8-15 | 5-8-15 | 6-0-0 | 5-8-15 | 5-8-15 | 6-4-9

Scale = 1:71.1

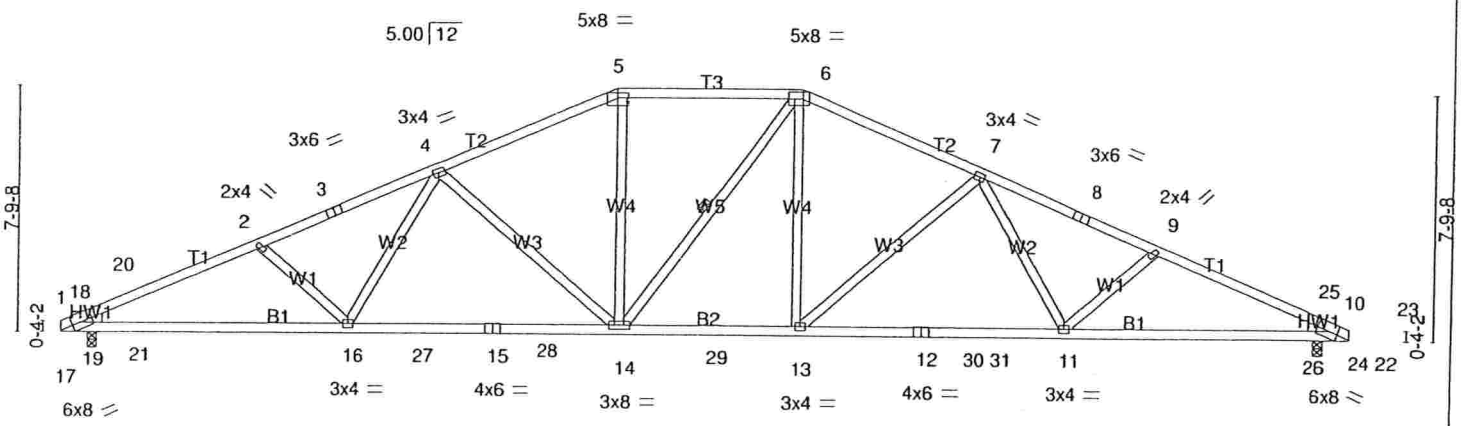

17-5-12 | 17-5-12

0-10-8 | 9-3-1 | 17-10-8 | 23-10-8 | 32-5-15 | 40-10-8 | 41-9-0

0-10-8 | 8-4-9 | 8-7-7 | 6-0-0 | 8-7-7 | 8-4-9 | 0-10-8

Plate Offsets (X,Y): [1:0-3-2,Edge], [5:0-4-0,0-1-13], [6:0-5-12,0-2-8], [10:0-3-2,Edge]

LOADING (psf)		SPACING 2-0-0	CSI	DEFL in (loc) l/defl L/d	PLATES GRIP
TCLL	16.0	Plates Increase 1.25	TC 0.79	Vert(LL) 0.36 11-13 >999 360	MT20 244/190
TCDL	7.0	Lumber Increase 1.25	BC 0.82	Vert(TL) -0.74 11-13 >677 240	
BCLL	0.0 *	Rep Stress Incr YES	WB 0.48	Horz(TL) 0.15 10 n/a n/a	
BCDL	10.0	Code FRC2007/TPI2002	(Matrix-M)		Weight: 216 lb

LUMBER
TOP CHORD 2 X 4 SYP No.2 *Except*
T1: 2 X 4 SYP No.1D
BOT CHORD 2 X 4 SYP No.1D
WEBS 2 X 4 SYP No.2 *Except*
W1,W2: 2 X 4 SYP No.3
WEDGE
Left: 2 X 4 SYP No.3, Right: 2 X 4 SYP No.3

BRACING
TOP CHORD Structural wood sheathing directly applied or 2-6-3 oc purlins.
BOT CHORD Rigid ceiling directly applied or 5-5-6 oc bracing.
WEBS 1 Row at midpt 6-14

REACTIONS (lb/size) 19=1506/0-1-8 (input: 0-3-8), 24=1514/0-1-8 (input: 0-3-8)
Max Horz 19=-143(LC 7)
Max Uplift19=-562(LC 6), 24=-562(LC 7)

FORCES (lb) - Max. Comp./Max. Ten. - All forces 250 (lb) or less except when shown.
TOP CHORD 18-20=-797/384, 2-20=-2863/1652, 2-3=-2728/1554, 3-4=-2694/1565, 4-5=-2204/1364, 5-6=-1995/1322, 6-7=-2225/1364, 7-8=-2712/1565, 8-9=-2746/1554, 9-25=-2880/1652, 23-25=-803/384
BOT CHORD 19-21=-512/848, 16-21=-1402/2558, 16-27=-1201/2366, 27-28=-1201/2366, 15-28=-1201/2366, 14-15=-1201/2366, 14-29=-886/2015, 13-29=-886/2015, 12-13=-1201/2385, 12-30=-1201/2385, 30-31=-1201/2385, 11-31=-1201/2385, 11-26=-1402/2574, 24-26=-512/853
WEBS 4-16=-53/344, 4-14=-513/422, 5-14=-214/565, 6-13=-215/605, 7-13=-511/422, 7-11=-53/345, 18-19=-587/280, 20-21=-492/465, 19-20=-1085/618, 18-21=-480/908, 23-24=-590/280, 25-26=-494/465, 24-25=-1091/618, 23-26=-480/913

NOTES
1) Unbalanced roof live loads have been considered for this design.
2) Wind: ASCE 7-05; 140mph (3-second gust); TCDL=4.2psf; BCDL=5.0psf; h=25ft; Cat. II; Exp B; enclosed; MWFRS (low-rise) and C-C Interior(1) zone; cantilever left and right exposed ;C-C for members and forces & MWFRS for reactions shown; Lumber DOL=1.60 plate grip DOL=1.60
3) Provide adequate drainage to prevent water ponding.
4) This truss has been designed for a 10.0 psf bottom chord live load nonconcurrent with any other live loads.
5) * This truss has been designed for a live load of 20.0psf on the bottom chord in all areas where a rectangle 3-6-0 tall by 1-0-0 wide will fit between the bottom chord and any other members, with BCDL = 10.0psf.
6) Provide mechanical connection (by others) of truss to bearing plate capable of withstanding 100 lb uplift at joint(s) except (jt=lb) 19=562, 24=562.

LOAD CASE(S) Standard

TOMAS PONCE
LICENSE
No. 50068
STATE OF
FLORIDA
PROFESSIONAL ENGINEER

FEB 24 2009

Job	Truss	Truss Type	Qty	Ply	BAYBURY_140_FLORIDA
BAYBURY	H2X	HIP	2	1	Job Reference (optional)

Maronda Homes Inc., Sanford, FL — 7.110 s Dec 15 2008 MiTek Industries, Inc. Wed Feb 04 15:05:24 2009 Page 1

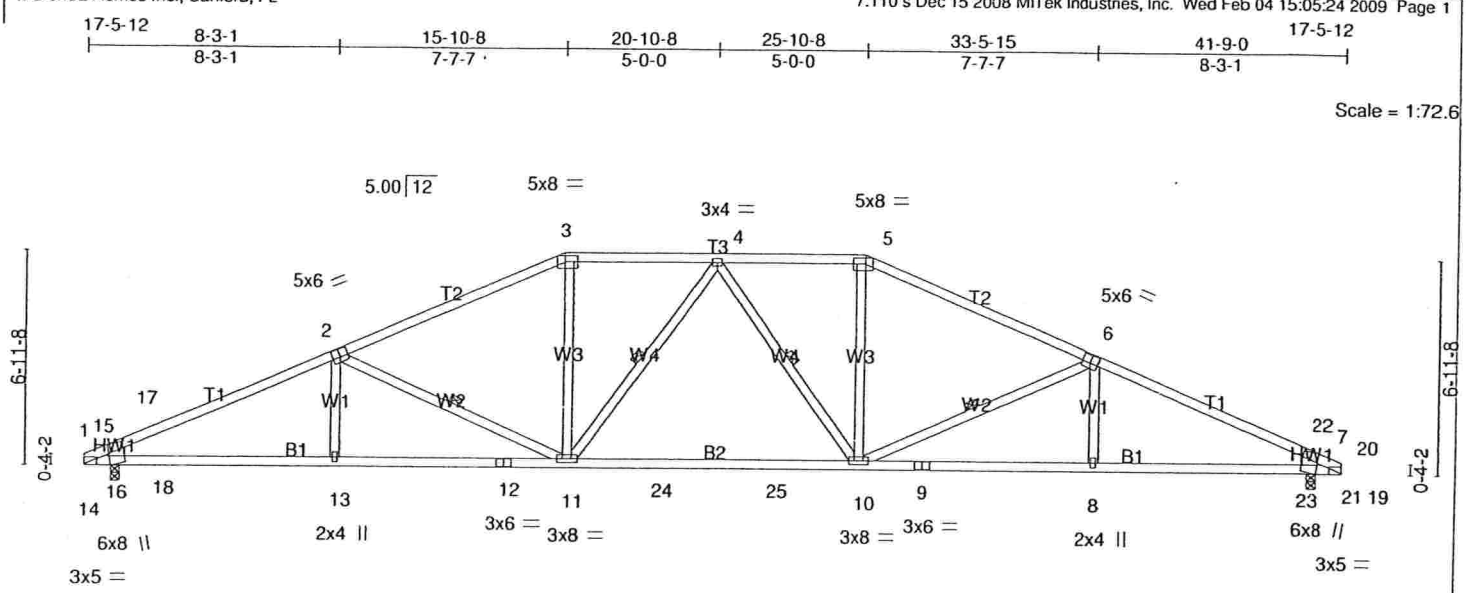

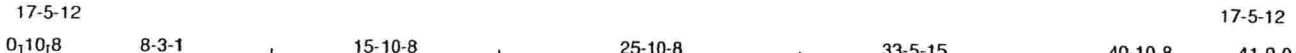

Plate Offsets (X,Y): [1:0-2-10,Edge], [1:0-4-0,Edge], [2:0-3-0,0-3-0], [3:0-5-0,0-2-4], [5:0-5-0,0-2-4], [6:0-3-0,0-3-0], [7:0-4-0,Edge], [7:0-2-10,Edge]

LOADING (psf)		SPACING	2-0-0	CSI		DEFL	in	(loc)	l/defl	L/d	PLATES	GRIP
TCLL	16.0	Plates Increase	1.25	TC	0.87	Vert(LL)	-0.42	10-11	>999	360	MT20	244/190
TCDL	7.0	Lumber Increase	1.25	BC	0.90	Vert(TL)	-0.85	10-11	>592	240		
BCLL	0.0 *	Rep Stress Incr	YES	WB	0.12	Horz(TL)	0.15	7	n/a	n/a		
BCDL	10.0	Code FRC2007/TPI2002		(Matrix-M)							Weight: 207 lb	

LUMBER
TOP CHORD 2 X 4 SYP No.2
BOT CHORD 2 X 4 SYP No.1D
WEBS 2 X 4 SYP No.2 *Except*
W1: 2 X 4 SYP No.3
WEDGE
Left: 2 X 4 SYP No.3, Right: 2 X 4 SYP No.3

BRACING
TOP CHORD Structural wood sheathing directly applied or 2-2-0 oc purlins.
BOT CHORD Rigid ceiling directly applied or 5-6-2 oc bracing.
WEBS 1 Row at midpt 2-11, 4-11, 4-10, 6-10

REACTIONS (lb/size) 16=1455/0-1-8 (input: 0-3-8), 21=1455/0-1-8 (input: 0-3-8)
Max Horz 16=127(LC 6)
Max Uplift16=-541(LC 6), 21=-541(LC 7)

FORCES (lb) - Max. Comp./Max. Ten. - All forces 250 (lb) or less except when shown.
TOP CHORD 15-17=-825/378, 2-17=-2727/1640, 2-3=-2334/1446, 3-4=-2109/1420, 4-5=-2109/1420, 5-6=-2334/1446, 6-22=-2727/1640, 20-22=-825/378
BOT CHORD 16-18=-504/765, 13-18=-1379/2444, 12-13=-1382/2443, 11-12=-1382/2443, 11-24=-1103/2163, 24-25=-1103/2163, 10-25=-1103/2163, 9-10=-1382/2443, 8-9=-1382/2443, 8-23=-1379/2444, 21-23=-504/765
WEBS 2-11=-403/389, 3-11=-178/533, 5-10=-178/533, 6-10=-403/389, 15-16=-642/293, 17-18=-280/443, 16-17=-1057/621, 15-18=-466/865, 20-21=-642/293, 22-23=-280/443, 21-22=-1057/621, 20-23=-466/865

NOTES
1) Unbalanced roof live loads have been considered for this design.
2) Wind: ASCE 7-05; 140mph (3-second gust); TCDL=4.2psf; BCDL=5.0psf; h=25ft; Cat. II; Exp B; enclosed; MWFRS (low-rise) and C-C Interior(1) zone; cantilever left and right exposed ;C-C for members and forces & MWFRS for reactions shown; Lumber DOL=1.60 plate grip DOL=1.60
3) Provide adequate drainage to prevent water ponding.
4) This truss has been designed for a 10.0 psf bottom chord live load nonconcurrent with any other live loads.
5) * This truss has been designed for a live load of 20.0psf on the bottom chord in all areas where a rectangle 3-6-0 tall by 1-0-0 wide will fit between the bottom chord and any other members, with BCDL = 10.0psf.
6) Provide mechanical connection (by others) of truss to bearing plate capable of withstanding 100 lb uplift at joint(s) except (jt=lb) 16=541, 21=541.

LOAD CASE(S) Standard

TOMAS PONCE
LICENSE
No. 50068
STATE OF
FLORIDA
PROFESSIONAL ENGINEER

FEB 24 2009

Job	Truss	Truss Type	Qty	Ply	BAYBURY_140_FLORIDA
BAYBURY	H3X	HIP	2	1	Job Reference (optional)

Maronda Homes Inc., Sanford, FL

7.110 s Dec 15 2008 MiTek Industries, Inc. Wed Feb 04 15:05:26 2009 Page 1

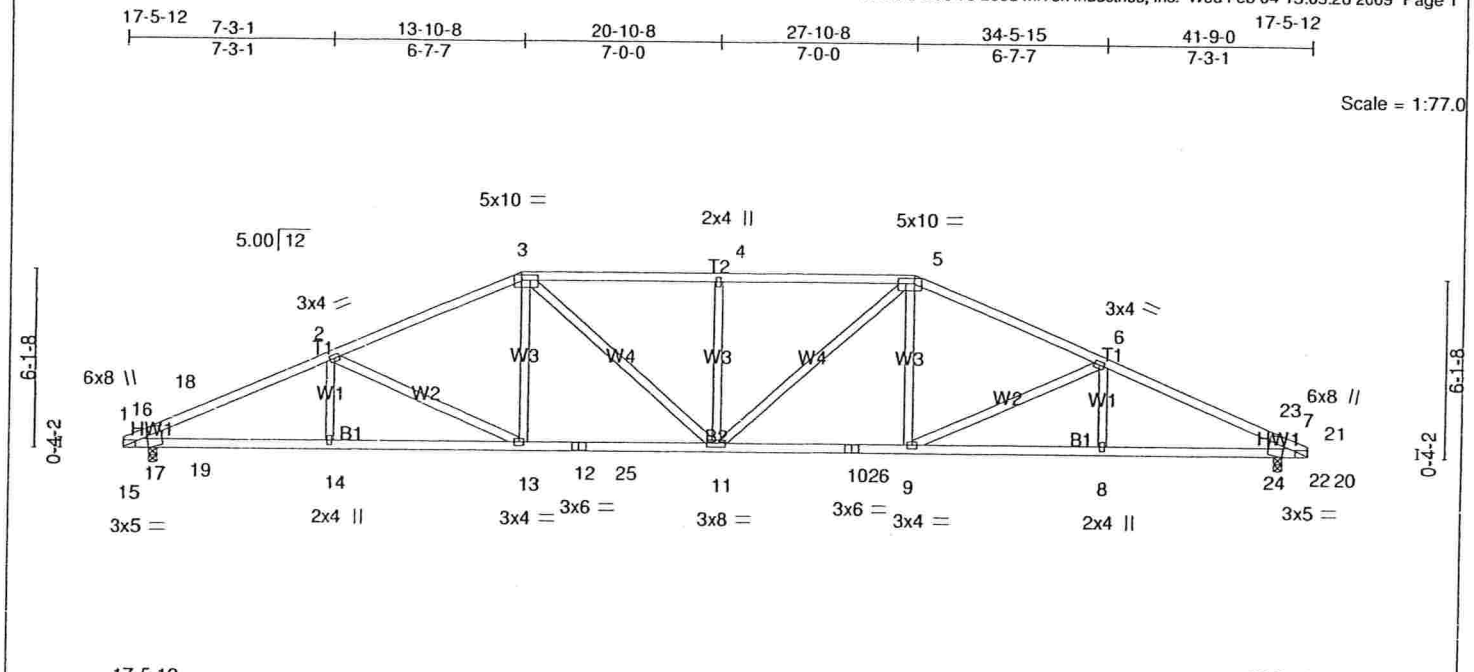

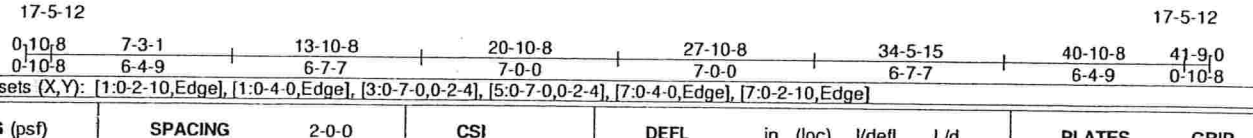

Plate Offsets (X,Y): [1:0-2-10,Edge], [1:0-4-0,Edge], [3:0-7-0,0-2-4], [5:0-7-0,0-2-4], [7:0-4-0,Edge], [7:0-2-10,Edge]

LOADING (psf)		SPACING	2-0-0	CSI		DEFL	in	(loc)	l/defl	L/d	PLATES	GRIP
TCLL	16.0	Plates Increase	1.25	TC	0.83	Vert(LL)	0.36	11	>999	360	MT20	244/190
TCDL	7.0	Lumber Increase	1.25	BC	0.92	Vert(TL)	-0.56	11-13	>899	240		
BCLL	0.0 *	Rep Stress Incr	YES	WB	0.28	Horz(TL)	0.16	7	n/a	n/a		
BCDL	10.0	Code FRC2007/TPI2002		(Matrix-M)							Weight: 210 lb	

LUMBER
TOP CHORD 2 X 4 SYP No.2
BOT CHORD 2 X 4 SYP No.1D *Except*
B2: 2 X 4 SYP No.2
WEBS 2 X 4 SYP No.3 *Except*
W2,W4: 2 X 4 SYP No.2
WEDGE
Left: 2 X 4 SYP No.3, Right: 2 X 4 SYP No.3

BRACING
TOP CHORD Structural wood sheathing directly applied or 2-2-0 oc purlins.
BOT CHORD Rigid ceiling directly applied or 2-2-0 oc bracing.

REACTIONS (lb/size) 17=1471/0-1-8 (input: 0-3-8), 22=1471/0-1-8 (input: 0-3-8)
Max Horz 17=111(LC 6)
Max Uplift17=-519(LC 6), 22=-519(LC 7)

FORCES (lb) - Max. Comp./Max. Ten. - All forces 250 (lb) or less except when shown.
TOP CHORD 16-18=-844/427, 2-18=-2758/1659, 2-3=-2473/1550, 3-4=-2530/1690, 4-5=-2530/1690, 5-6=-2473/1550, 6-23=-2758/1659, 21-23=-844/427
BOT CHORD 17-19=-490/769, 14-19=-1407/2473, 13-14=-1407/2473, 12-13=-1171/2259, 12-25=-1171/2259, 11-25=-1171/2259, 11-26=-1171/2259, 10-26=-1171/2259, 9-10=-1171/2259, 8-9=-1407/2473, 8-24=-1407/2473, 22-24=-490/769
WEBS 2-13=-266/297, 3-13=-62/401, 3-11=-234/479, 4-11=-318/379, 5-11=-234/479, 5-9=-62/401, 6-9=-266/298, 16-17=-656/335, 18-19=-263/355, 17-18=-1069/633, 16-19=-480/876, 21-22=-656/335, 23-24=-263/355, 22-23=-1069/633, 21-24=-480/876

NOTES
1) Unbalanced roof live loads have been considered for this design.
2) Wind: ASCE 7-05; 140mph (3-second gust); TCDL=4.2psf; BCDL=5.0psf; h=25ft; Cat. II; Exp B; enclosed; MWFRS (low-rise) and C-C Interior(1) zone; cantilever left and right exposed ;C-C for members and forces & MWFRS for reactions shown; Lumber DOL=1.60 plate grip DOL=1.60
3) Provide adequate drainage to prevent water ponding.
4) This truss has been designed for a 10.0 psf bottom chord live load nonconcurrent with any other live loads.
5) * This truss has been designed for a live load of 20.0psf on the bottom chord in all areas where a rectangle 3-6-0 tall by 1-0-0 wide will fit between the bottom chord and any other members, with BCDL = 10.0psf.
6) Provide mechanical connection (by others) of truss to bearing plate capable of withstanding 100 lb uplift at joint(s) except (jt=lb) 17=519, 22=519.

LOAD CASE(S) Standard

TOMAS PONCE LICENSE No. 50068 STATE OF FLORIDA PROFESSIONAL ENGINEER

FEB 2 4 2009

Job	Truss	Truss Type	Qty	Ply	BAYBURY_140_FLORIDA
BAYBURY	H4X	HIP	2	1	Job Reference (optional)

Maronda Homes Inc., Sanford, FL

7.110 s Dec 15 2008 MiTek Industries, Inc. Wed Feb 04 15:05:29 2009 Page 1

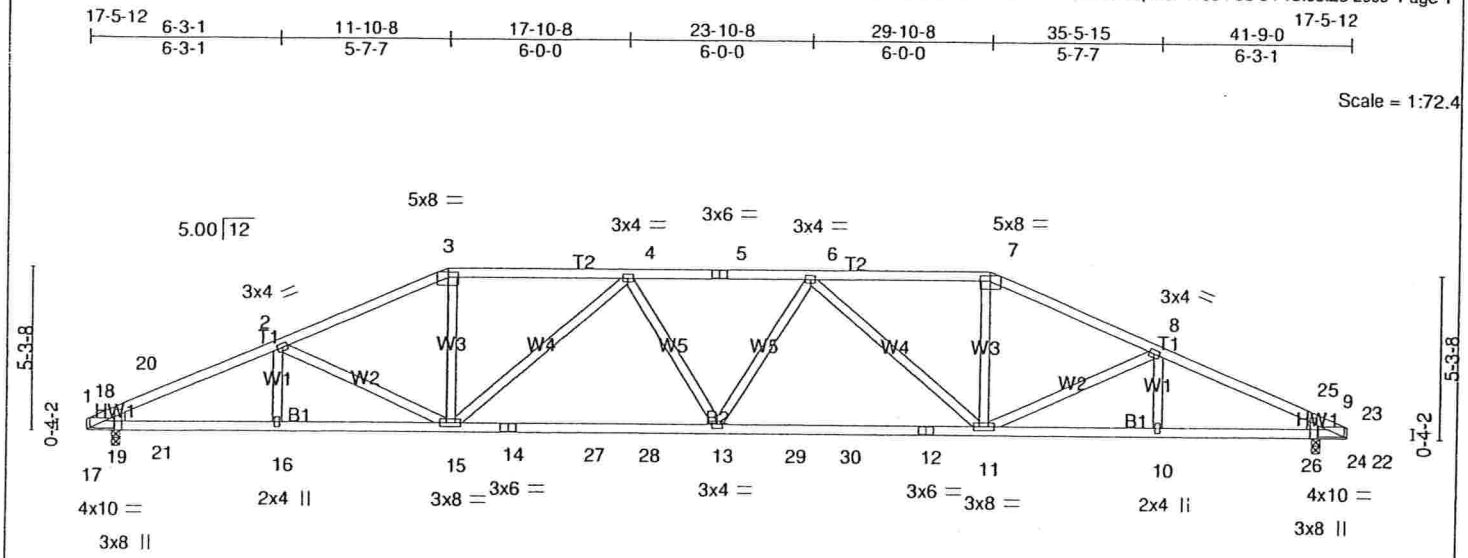

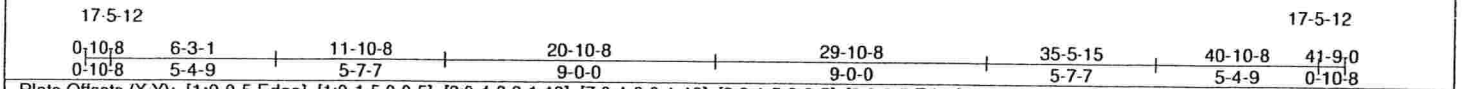

Plate Offsets (X,Y): [1:0-0-5,Edge], [1:0-1-5,0-0-5], [3:0-4-0,0-1-13], [7:0-4-0,0-1-13], [9:0-1-5,0-0-5], [9:0-0-5,Edge]

LOADING (psf)		SPACING	2-0-0	CSI		DEFL	in	(loc)	l/defl	L/d	PLATES	GRIP
TCLL	16.0	Plates Increase	1.25	TC	0.77	Vert(LL)	0.40	13	>999	360	MT20	244/190
TCDL	7.0	Lumber Increase	1.25	BC	0.91	Vert(TL)	-0.70	13-15	>712	240		
BCLL	0.0 *	Rep Stress Incr	YES	WB	0.65	Horz(TL)	0.17	9	n/a	n/a		
BCDL	10.0	Code FRC2007/TPI2002		(Matrix-M)							Weight: 207 lb	

LUMBER
TOP CHORD 2 X 4 SYP No.2
BOT CHORD 2 X 4 SYP No.1D *Except*
B2: 2 X 4 SYP No.2
WEBS 2 X 4 SYP No.3 *Except*
W4: 2 X 4 SYP No.2
WEDGE
Left: 2 X 4 SYP No.3, Right: 2 X 4 SYP No.3

BRACING
TOP CHORD Structural wood sheathing directly applied or 2-7-9 oc purlins.
BOT CHORD Rigid ceiling directly applied or 4-11-3 oc bracing.

REACTIONS (lb/size) 19=1451/0-1-8 (input: 0-3-8), 24=1451/0-1-8 (input: 0-3-8)
Max Horz 19=95(LC 6)
Max Uplift19=-542(LC 5), 24=-542(LC 4)

FORCES (lb) - Max. Comp./Max. Ten. - All forces 250 (lb) or less except when shown.
TOP CHORD 18-20=-839/463, 2-20=-2676/1668, 2-3=-2549/1631, 3-4=-2347/1582, 4-5=-2906/1880, 5-6=-2906/1880, 6-7=-2347/1582, 7-8=-2549/1631, 8-25=-2676/1668, 23-25=-839/463
BOT CHORD 19-21=-479/743, 16-21=-1423/2399, 15-16=-1423/2399, 14-15=-1620/2822, 14-27=-1620/2822, 27-28=-1620/2822, 13-28=-1620/2822, 13-29=-1620/2822, 29-30=-1620/2822, 12-30=-1620/2822, 11-12=-1620/2822, 10-11=-1423/2399, 10-26=-1423/2399, 24-26=-479/743
WEBS 3-15=-290/660, 4-15=-717/431, 6-11=-717/431, 7-11=-290/660, 18-19=-660/368, 20-21=-220/285, 19-20=-1043/640, 18-21=-490/853, 23-24=-660/368, 25-26=-219/285, 24-25=-1043/640, 23-26=-490/853

NOTES
1) Unbalanced roof live loads have been considered for this design.
2) Wind: ASCE 7-05; 140mph (3-second gust); TCDL=4.2psf; BCDL=5.0psf; h=25ft; Cat. II; Exp B; enclosed; MWFRS (low-rise) and C-C Interior(1) zone; cantilever left and right exposed ;C-C for members and forces & MWFRS for reactions shown; Lumber DOL=1.60 plate grip DOL=1.60
3) Provide adequate drainage to prevent water ponding.
4) This truss has been designed for a 10.0 psf bottom chord live load nonconcurrent with any other live loads.
5) * This truss has been designed for a live load of 20.0psf on the bottom chord in all areas where a rectangle 3-6-0 tall by 1-0-0 wide will fit between the bottom chord and any other members, with BCDL = 10.0psf.
6) Provide mechanical connection (by others) of truss to bearing plate capable of withstanding 100 lb uplift at joint(s) except (jt=lb) 19=542, 24=542.

LOAD CASE(S) Standard

TOMAS PONCE
LICENSE
No. 50068
STATE OF FLORIDA
PROFESSIONAL ENGINEER

FEB 2 4 2009

Job	Truss	Truss Type	Qty	Ply	BAYBURY_140_FLORIDA
BAYBURY	H5X	HIP	2	1	Job Reference (optional)

Maronda Homes Inc., Sanford, FL

7.110 s Dec 15 2008 MiTek Industries, Inc. Wed Feb 04 15:05:30 2009 Page 1

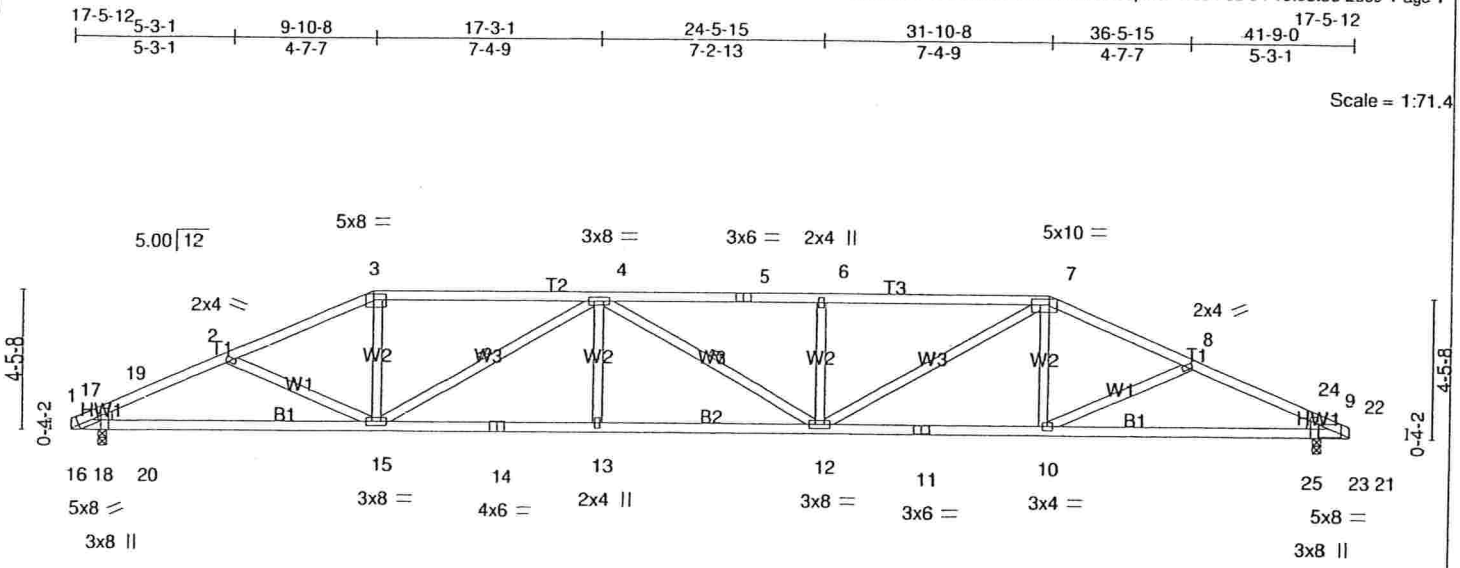

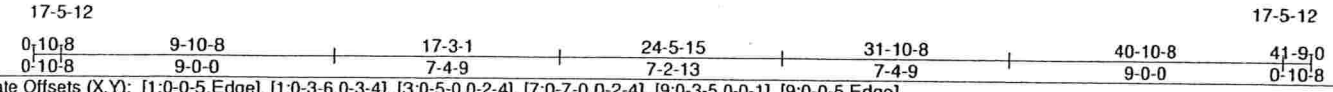

Plate Offsets (X,Y): [1:0-0-5,Edge], [1:0-3-6,0-3-4], [3:0-5-0,0-2-4], [7:0-7-0,0-2-4], [9:0-3-5,0-0-1], [9:0-0-5,Edge]

LOADING (psf)		SPACING	2-0-0	CSI		DEFL	in	(loc)	l/defl	L/d	PLATES	GRIP
TCLL	16.0	Plates Increase	1.25	TC	0.69	Vert(LL)	0.51	12-13	>990	360	MT20	244/190
TCDL	7.0	Lumber Increase	1.25	BC	0.88	Vert(TL)	-0.70	12-13	>713	240		
BCLL	0.0 *	Rep Stress Incr	YES	WB	0.73	Horz(TL)	0.18	9	n/a	n/a		
BCDL	10.0	Code FRC2007/TPI2002		(Matrix-M)							Weight: 203 lb	

LUMBER
TOP CHORD 2 X 4 SYP No.1D *Except*
T2,T3: 2 X 4 SYP No.2
BOT CHORD 2 X 4 SYP No.2
WEBS 2 X 4 SYP No.3 *Except*
W3: 2 X 4 SYP No.2
WEDGE
Left: 2 X 4 SYP No.3, Right: 2 X 4 SYP No.3

BRACING
TOP CHORD Structural wood sheathing directly applied or 3-2-4 oc purlins.
BOT CHORD Rigid ceiling directly applied or 4-3-14 oc bracing.
WEBS 1 Row at midpt 4-15, 4-12

REACTIONS (lb/size) 18=1378/0-1-10 (input: 0-3-8), 23=1378/0-1-10 (input: 0-3-8)
Max Horz 18=-79(LC 7)
Max Uplift18=-569(LC 5), 23=-569(LC 4)

FORCES (lb) - Max. Comp./Max. Ten. - All forces 250 (lb) or less except when shown.
TOP CHORD 17-19=-689/347, 2-19=-2505/1726, 2-3=-2463/1696, 3-4=-2287/1650, 4-5=-3123/2250, 5-6=-3123/2250, 6-7=-3123/2249, 7-8=-2463/1697, 8-24=-2506/1727, 22-24=-690/347
BOT CHORD 18-20=-560/742, 15-20=-1460/2223, 14-15=-2009/3123, 13-14=-2009/3123, 12-13=-2009/3123, 11-12=-1397/2270, 10-11=-1397/2270, 10-25=-1460/2224, 23-25=-560/742
WEBS 3-15=-265/653, 4-15=-1037/694, 4-13=0/287, 6-12=-339/408, 7-12=-701/1052, 7-10=0/269, 17-18=-535/252, 19-20=-473/615, 18-19=-956/646, 17-20=-513/809, 22-23=-536/251, 24-25=-473/617, 23-24=-956/646, 22-25=-513/809

NOTES
1) Unbalanced roof live loads have been considered for this design.
2) Wind: ASCE 7-05; 140mph (3-second gust); TCDL=4.2psf; BCDL=5.0psf; h=25ft; Cat. II; Exp B; enclosed; MWFRS (low-rise) and C-C Interior(1) zone; cantilever left and right exposed ;C-C for members and forces & MWFRS for reactions shown; Lumber DOL=1.60 plate grip DOL=1.60
3) Provide adequate drainage to prevent water ponding.
4) This truss has been designed for a 10.0 psf bottom chord live load nonconcurrent with any other live loads.
5) * This truss has been designed for a live load of 20.0psf on the bottom chord in all areas where a rectangle 3-6-0 tall by 1-0-0 wide will fit between the bottom chord and any other members.
6) Provide mechanical connection (by others) of truss to bearing plate capable of withstanding 100 lb uplift at joint(s) except (jt=lb) 18=569, 23=569.

LOAD CASE(S) Standard

TOMAS PONCE
LICENSE
No. 50068
STATE OF FLORIDA
PROFESSIONAL ENGINEER

FEB 24 2009

Job	Truss	Truss Type	Qty	Ply	BAYBURY_140_FLORIDA
BAYBURY	HGRD1X	HIP	1	2	Job Reference (optional)

Maronda Homes Inc., Sanford, FL

7.110 s Dec 15 2008 MiTek Industries, Inc. Wed Feb 04 15:05:34 2009 Page 1

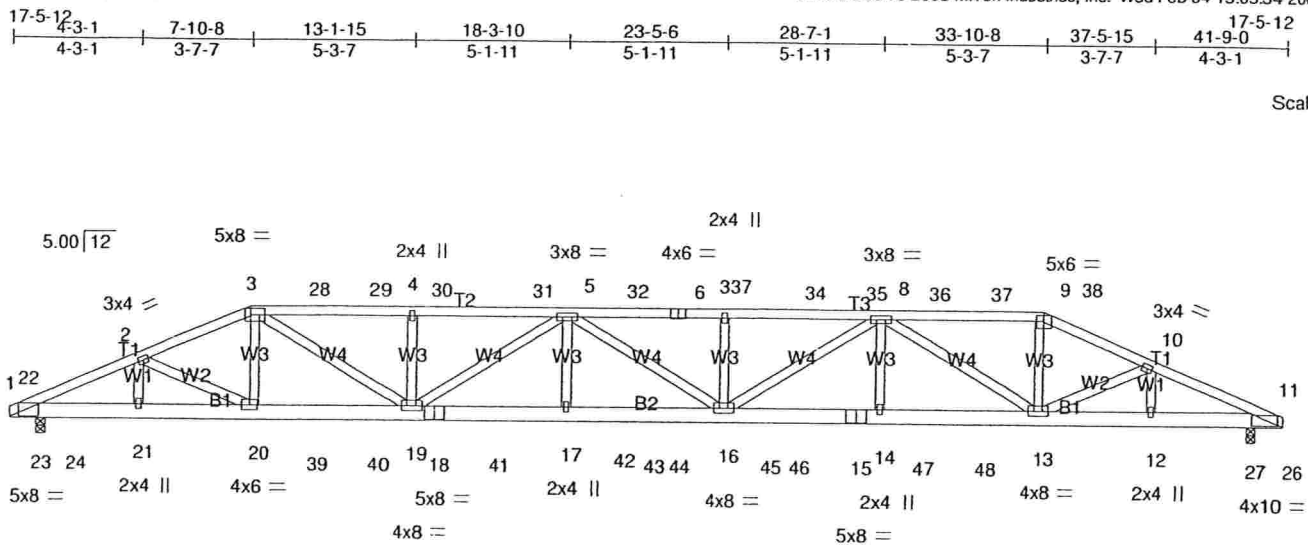

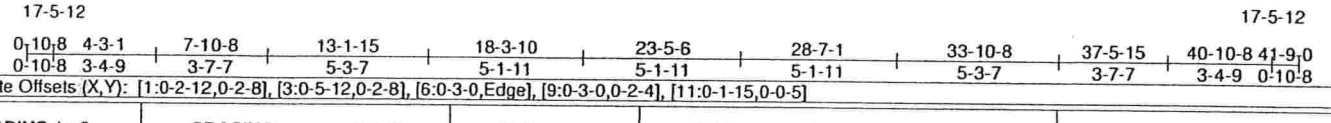

Plate Offsets (X,Y): [1:0-2-12,0-2-8], [3:0-5-12,0-2-8], [6:0-3-0,Edge], [9:0-3-0,0-2-4], [11:0-1-15,0-0-5]

LOADING (psf)		SPACING 2-0-0		CSI		DEFL	in	(loc)	l/defl	L/d	PLATES	GRIP
TCLL	16.0	Plates Increase	1.25	TC	0.52	Vert(LL)	0.62	16-17	>813	360	MT20	244/190
TCDL	7.0	Lumber Increase	1.25	BC	0.77	Vert(TL)	-0.84	16-17	>595	240		
BCLL	0.0 *	Rep Stress Incr	NO	WB	0.44	Horz(TL)	0.14	11	n/a	n/a		
BCDL	10.0	Code FRC2007/TPI2002		(Matrix-M)							Weight: 490 lb	

LUMBER
TOP CHORD 2 X 4 SYP No.2
BOT CHORD 2 X 6 SYP No.1D
WEBS 2 X 4 SYP No.3

BRACING
TOP CHORD Structural wood sheathing directly applied or 4-3-0 oc purlins.
BOT CHORD Rigid ceiling directly applied or 7-6-1 oc bracing.

REACTIONS (lb/size) 24=2932/0-1-8 (input: 0-3-8), 27=2932/0-1-8 (input: 0-3-8)
Max Horz 24=-63(LC 6)
Max Uplift24=-1781(LC 4), 27=-1781(LC 3)

FORCES (lb) - Max. Comp./Max. Ten. - All forces 250 (lb) or less except when shown.

TOP CHORD 1-22=-1675/1030, 2-22=-5057/3162, 2-3=-6159/3970, 3-28=-8017/5215, 28-29=-8017/5215, 4-29=-8017/5215, 4-30=-8017/5215, 30-31=-8017/5215, 31-32=-8017/5215, 5-32=-8017/5215, 5-33=-9214/5985, 6-33=-9214/5985, 6-7=-9214/5985, 7-34=-9214/5985, 34-35=-9214/5985, 35-36=-9214/5985, 8-36=-9214/5985, 8-37=-5741/3741, 37-38=-5741/3741, 9-38=-5741/3741, 9-10=-6125/3947, 10-25=-5069/3171, 11-25=-1676/1032

BOT CHORD 1-23=-936/1524, 23-24=-2836/4583, 21-24=-2839/4583, 20-21=-2839/4583, 20-39=-3597/5709, 39-40=-3597/5709, 19-40=-3597/5709, 18-19=-5908/9282, 18-41=-5908/9282, 41-42=-5908/9282, 17-42=-5908/9282, 17-43=-5908/9282, 43-44=-5908/9282, 16-44=-5908/9282, 16-45=-5129/8075, 45-46=-5129/8075, 15-46=-5129/8075, 14-15=-5129/8075, 14-47=-5129/8075, 47-48=-5129/8075, 13-48=-5129/8075, 12-13=-2844/4593, 12-27=-2844/4593, 26-27=-2844/4593, 11-26=-938/1526

WEBS 2-21=-891/623, 2-20=-822/1280, 3-20=-339/630, 3-19=-1754/2756, 4-19=-281/330, 5-19=-1526/969, 5-17=-195/606, 7-16=-288/329, 8-16=-864/1381, 8-14=-148/556, 8-13=-2806/1795, 9-13=-1219/2026, 10-13=-789/1235, 10-12=-856/599, 22-23=-1403/914, 25-26=-1409/918

TOMAS PONCE
LICENSE
No. 50068
STATE OF
FLORIDA
PROFESSIONAL ENGINEER

NOTES
1) 2-ply truss to be connected together with 10d (0.120"x3") nails as follows:
Top chords connected as follows: 2 X 4 - 1 row at 0-9-0 oc.
Bottom chords connected as follows: 2 X 6 - 2 rows at 0-9-0 oc.
Webs connected as follows: 2 X 4 - 1 row at 0-9-0 oc.
2) All loads are considered equally applied to all plies, except if noted as front (F) or back (B) face in the LOAD CASE(S) section. Ply to ply connections have been provided to distribute only loads noted as (F) or (B), unless otherwise indicated.
3) Unbalanced roof live loads have been considered for this design.
4) Wind: ASCE 7-05; 140mph (3-second gust); TCDL=4.2psf; BCDL=5.0psf; h=25ft; Cat. II; Exp B; enclosed; MWFRS (low-rise); cantilever left and right exposed ; Lumber DOL=1.60 plate grip DOL=1.60
5) Provide adequate drainage to prevent water ponding.
6) This truss has been designed for a 10.0 psf bottom chord live load nonconcurrent with any other live loads.
7) * This truss has been designed for a live load of 20.0psf on the bottom chord in all areas where a rectangle 3-6-0 tall by 1-0-0 wide will fit between the bottom chord and any other members.
8) Provide mechanical connection (by others) of truss to bearing plate capable of withstanding 100 lb uplift at joint(s) except (jt=lb) 24=1781, 27=1781.

FEB 2 4 2009

Continued on page 2

NOTES

9) Hanger(s) or other connection device(s) shall be provided sufficient to support concentrated load(s) 26 lb down and 64 lb up at 7-10-8, 26 lb down and 64 lb up at 9-11-4, 26 lb down and 64 lb up at 11-11-4, 26 lb down and 64 lb up at 13-11-4, 26 lb down and 64 lb up at 15-11-4, 26 lb down and 64 lb up at 17-11-4, 26 lb down and 64 lb up at 19-11-4, 26 lb down and 64 lb up at 21-9-12, 26 lb down and 64 lb up at 23-9-12, 26 lb down and 64 lb up at 25-9-12, 26 lb down and 64 lb up at 27-9-12, 26 lb down and 64 lb up at 29-9-12, and 26 lb down and 64 lb up at 31-9-12, and 26 lb down and 64 lb up at 33-10-8 on top chord, and 573 lb down and 417 lb up at 7-10-8, 133 lb down and 75 lb up at 9-11-4, 133 lb down and 75 lb up at 11-11-4, 133 lb down and 75 lb up at 13-11-4, 133 lb down and 75 lb up at 15-11-4, 133 lb down and 75 lb up at 17-11-4, 133 lb down and 75 lb up at 19-11-4, 133 lb down and 75 lb up at 21-9-12, 133 lb down and 75 lb up at 23-9-12, 133 lb down and 75 lb up at 25-9-12, 133 lb down and 75 lb up at 27-9-12, 133 lb down and 75 lb up at 29-9-12, and 133 lb down and 75 lb up at 31-9-12, and 573 lb down and 417 lb up at 33-9-12 on bottom chord. The design/selection of such connection device(s) is the responsibility of others.

LOAD CASE(S) Standard

1) Regular: Lumber Increase=1.25, Plate Increase=1.25

Uniform Loads (plf)

Vert: 1-3=-46, 3-9=-46, 9-11=-46, 1-11=-20

Concentrated Loads (lb)

Vert: 3=-26(F) 6=-26(F) 9=-26(F) 18=-133(F) 20=-573(F) 13=-573(F) 15=-133(F) 28=-26(F) 29=-26(F) 30=-26(F) 31=-26(F) 32=-26(F) 33=-26(F) 34=-26(F) 35=-26(F) 36=-26(F) 37=-26(F) 38=-26(F) 39=-133(F) 40=-133(F) 41=-133(F) 42=-133(F) 43=-133(F) 44=-133(F) 45=-133(F) 46=-133(F) 47=-133(F) 48=-133(F)

TOMAS PONCE
LICENSE
No. 50068
STATE OF
FLORIDA
PROFESSIONAL ENGINEER

FEB 24 2009

Job	Truss	Truss Type	Qty	Ply	BAYBURY_140_FLORIDA
BAYBURY	HGRD2X	HIP	1	2	Job Reference (optional)

Maronda Homes Inc., Sanford, FL

7.110 s Dec 15 2008 MiTek Industries, Inc. Wed Feb 04 15:05:37 2009 Page 1

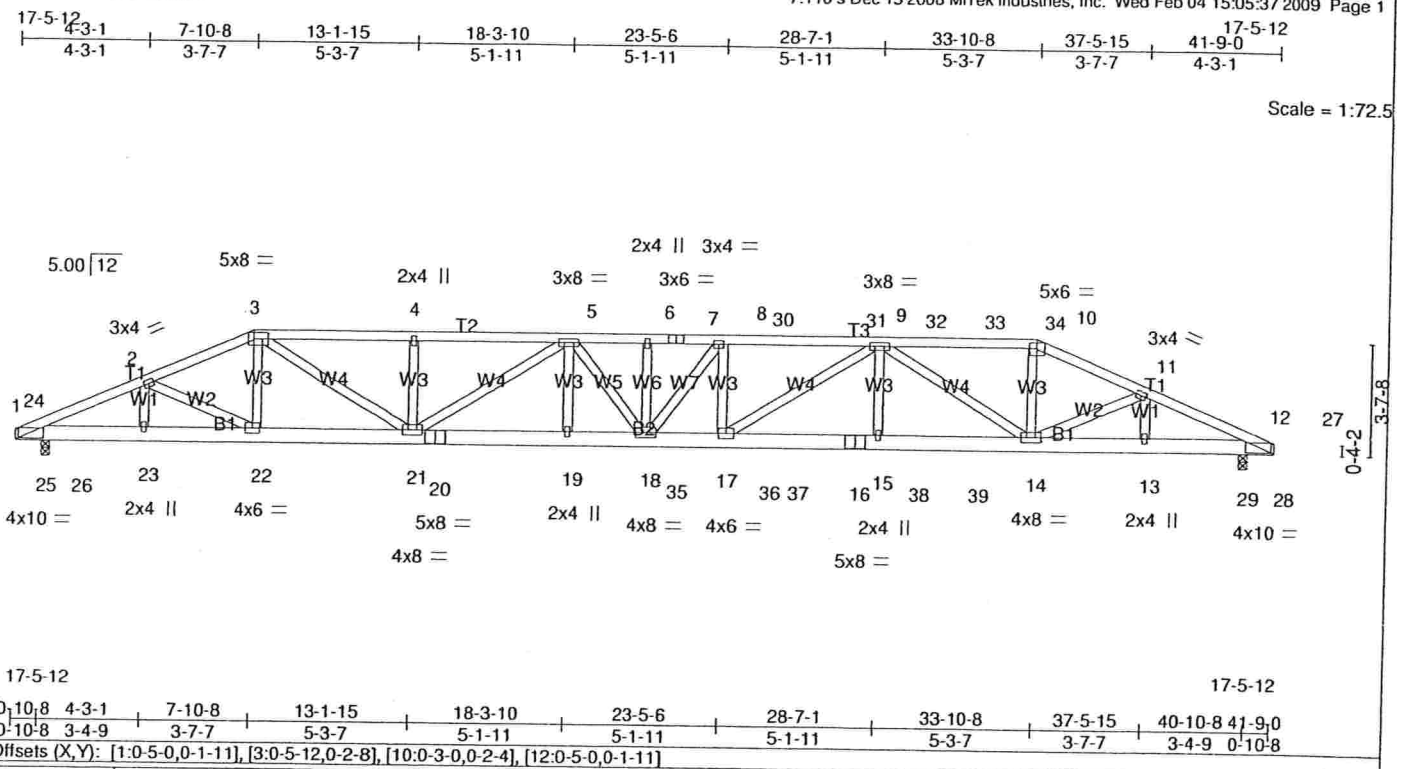

17-5-12

0-10-8 4-3-1	7-10-8	13-1-15	18-3-10	23-5-6	28-7-1	33-10-8	37-5-15	40-10-8 41-9-0
0-10-8 3-4-9	3-7-7	5-3-7	5-1-11	5-1-11	5-1-11	5-3-7	3-7-7	3-4-9 0-10-8

Plate Offsets (X,Y): [1:0-5-0,0-1-11], [3:0-5-12,0-2-8], [10:0-3-0,0-2-4], [12:0-5-0,0-1-11]

LOADING (psf)		SPACING	2-0-0	CSI		DEFL	in	(loc)	l/defl	L/d	PLATES	GRIP
TCLL	16.0	Plates Increase	1.25	TC	0.53	Vert(LL)	0.55	18	>917	360	MT20	244/190
TCDL	7.0	Lumber Increase	1.25	BC	0.75	Vert(TL)	-0.81	18	>620	240		
BCLL	0.0 *	Rep Stress Incr	NO	WB	0.47	Horz(TL)	0.13	12	n/a	n/a		
BCDL	10.0	Code FRC2007/TPI2002		(Matrix-M)							Weight: 503 lb	

LUMBER
TOP CHORD 2 X 4 SYP No.2
BOT CHORD 2 X 6 SYP No.1D
WEBS 2 X 4 SYP No.3 *Except*
W6: 2 X 4 SYP No.2

BRACING
TOP CHORD Structural wood sheathing directly applied or 4-1-13 oc purlins.
BOT CHORD Rigid ceiling directly applied or 7-11-0 oc bracing.

REACTIONS (lb/size) 26=2304/0-1-8 (input: 0-3-8), 29=2892/0-1-8 (input: 0-3-8)
Max Horz 26=63(LC 5)
Max Uplift26=-1177(LC 4), 29=-1615(LC 3)

FORCES (lb) - Max. Comp./Max. Ten. - All forces 250 (lb) or less except when shown.
TOP CHORD 1-24=-1287/659, 2-24=-3918/2066, 2-3=-4692/2568, 3-4=-6800/3834, 4-5=-6800/3834, 5-6=-9548/5489, 6-7=-9548/5489, 7-8=-9548/5489, 8-30=-9275/5434, 30-31=-9275/5434, 31-32=-9275/5434, 9-32=-9275/5434, 9-33=-5650/3371, 33-34=-5650/3371, 10-34=-5651/3371, 10-11=-6031/3556, 11-27=-4996/2872, 12-27=-1645/925
BOT CHORD 1-25=-599/1172, 25-26=-1837/3545, 23-26=-1840/3545, 22-23=-1840/3545, 21-22=-2277/4327, 20-21=-4930/8849, 19-20=-4930/8849, 18-19=-4930/8849, 18-35=-5309/9275, 17-35=-5309/9275, 17-36=-4600/7935, 36-37=-4600/7935, 16-37=-4600/7935, 15-16=-4600/7935, 15-38=-4600/7935, 38-39=-4600/7935, 14-39=-4600/7935, 13-14=-2570/4525, 13-29=-2570/4525, 28-29=-2570/4525, 12-28=-842/1500
WEBS 2-23=-667/416, 2-22=-489/931, 3-21=-1682/2949, 5-21=-2455/1447, 5-19=-29/265, 5-18=-756/1137, 8-17=-685/486, 9-17=-838/1617, 9-15=0/344, 9-14=-2748/1607, 10-14=-958/1852, 11-14=-697/1219, 11-13=-825/522, 6-18=-1249/670, 8-18=-91/471, 24-25=-1116/622, 27-28=-1402/840

NOTES
1) Special connection required to distribute web loads equally between all plies.
2) 2-ply truss to be connected together with 10d (0.120"x3") nails as follows:
Top chords connected as follows: 2 X 4 - 1 row at 0-9-0 oc.
Bottom chords connected as follows: 2 X 6 - 2 rows at 0-9-0 oc.
Webs connected as follows: 2 X 4 - 1 row at 0-9-0 oc.
3) All loads are considered equally applied to all plies, except if noted as front (F) or back (B) face in the LOAD CASE(S) section. Ply to ply connections have been provided to distribute only loads noted as (F) or (B), unless otherwise indicated.
4) Unbalanced roof live loads have been considered for this design.
5) Wind: ASCE 7-05; 140mph (3-second gust); TCDL=4.2psf; BCDL=5.0psf; h=25ft; Cat. II; Exp B; enclosed; MWFRS (low-rise); cantilever left and right exposed ; Lumber DOL=1.60 plate grip DOL=1.60
6) Provide adequate drainage to prevent water ponding.
7) This truss has been designed for a 10.0 psf bottom chord live load nonconcurrent with any other live loads.
8) * This truss has been designed for a live load of 20.0psf on the bottom chord in all areas where a rectangle 3-6-0 tall by 1-0-0 wide will fit between the bottom chord and any other members.
9) Provide mechanical connection (by others) of truss to bearing plate capable of withstanding 100 lb uplift at joint(s) except (jt=lb) 26=1177, 29=1615.

TOMAS PONCE
LICENSE
No. 50068
STATE OF FLORIDA
PROFESSIONAL ENGINEER

FEB 2 4 2009

Continued on page 2

NOTES

10) Hanger(s) or other connection device(s) shall be provided sufficient to support concentrated load(s) 95 lb down and 126 lb up at 21-9-12, 43 lb down and 119 lb up at 23-9-12, 43 lb down and 119 lb up at 25-9-12, 43 lb down and 119 lb up at 27-9-12, 95 lb down and 126 lb up at 29-9-12, 95 lb down and 126 lb up at 31-9-12, and 95 lb down and 126 lb up at 33-10-8, and 1173 lb down and 597 lb up at 20-11-4 on top chord, and 97 lb down and 47 lb up at 20-11-4, 76 lb down at 21-9-12, 38 lb down at 23-9-12, 38 lb down at 25-9-12, 38 lb down at 27-9-12, 76 lb down at 29-9-12, and 76 lb down at 31-9-12, and 492 lb down and 321 lb up at 33-9-12 on bottom chord. The design/selection of such connection device(s) is the responsibility of others.

LOAD CASE(S) Standard

1) Regular: Lumber Increase=1.25, Plate Increase=1.25
   Uniform Loads (plf)
   Vert: 1-3=-46, 3-10=-46, 10-12=-46, 1-12=-20
   Concentrated Loads (lb)
   Vert: 7=-95(F) 10=-95(F) 18=-49(F) 14=-492(F) 16=-19(F) 6=-1173(F) 30=-43(F) 31=-43(F) 32=-43(F) 33=-95(F) 34=-95(F) 35=-53(F) 36=-19(F) 37=-19(F) 38=-53(F) 39=-53(F)

TOMAS PONCE
LICENSE
No. 50068
STATE OF
FLORIDA
PROFESSIONAL ENGINEER

FEB 24 2009

Job	Truss	Truss Type	Qty	Ply	BAYBURY_140_FLORIDA
BAYBURY	S1X	SPECIAL	2	1	Job Reference (optional)

Maronda Homes Inc., Sanford, FL

7.110 s Dec 15 2008 MiTek Industries, Inc. Wed Feb 04 15:06:14 2009 Page 1

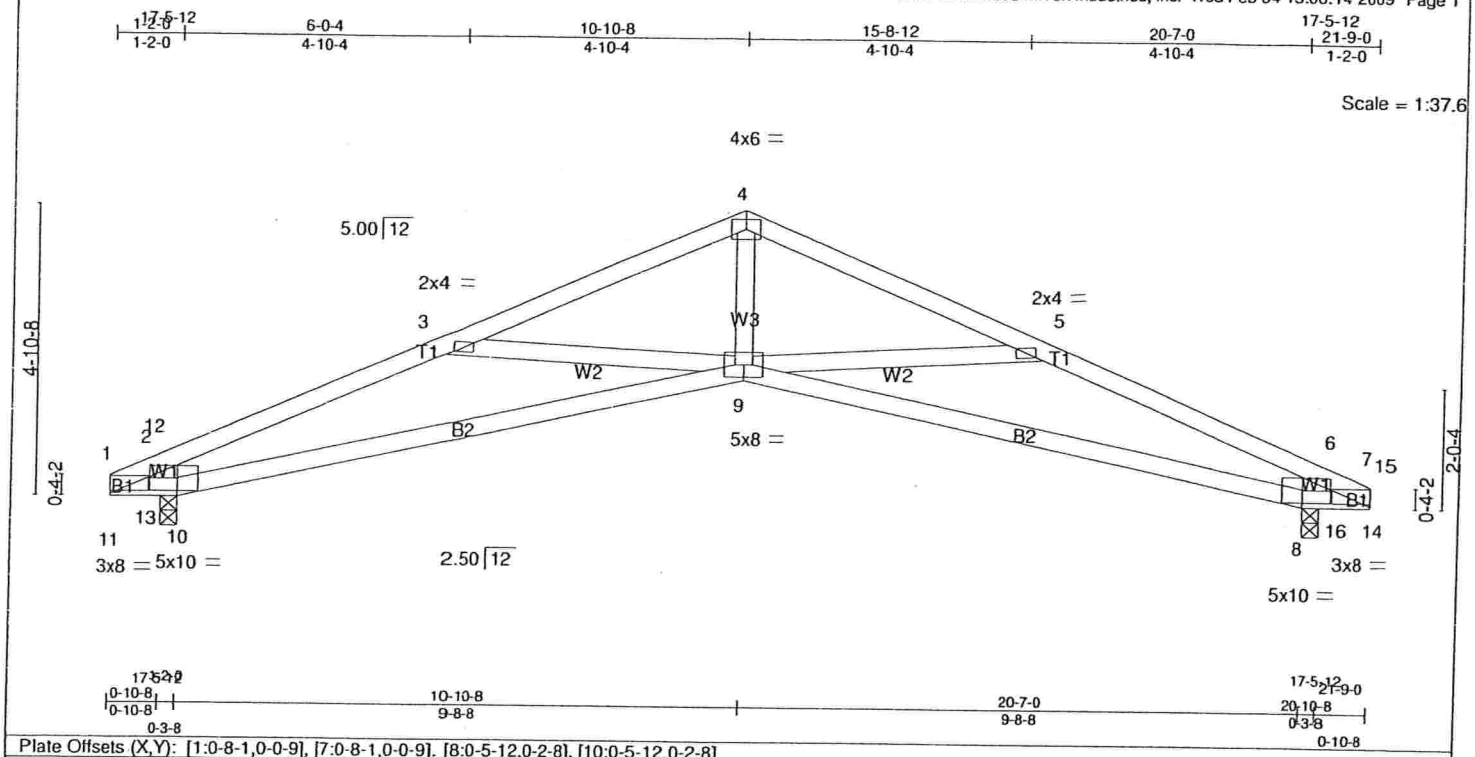

Plate Offsets (X,Y): [1:0-8-1,0-0-9], [7:0-8-1,0-0-9], [8:0-5-12,0-2-8], [10:0-5-12,0-2-8]

LOADING (psf)		SPACING	2-0-0	CSI		DEFL	in	(loc)	l/defl	L/d	PLATES	GRIP
TCLL	16.0	Plates Increase	1.25	TC	0.69	Vert(LL)	0.32	9	>739	360	MT20	244/190
TCDL	7.0	Lumber Increase	1.25	BC	0.89	Vert(TL)	-0.42	9-10	>557	240		
BCLL	0.0 *	Rep Stress Incr	YES	WB	0.27	Horz(TL)	0.23	8	n/a	n/a		
BCDL	10.0	Code FRC2007/TPI2002		(Matrix-M)							Weight: 88 lb	

LUMBER
TOP CHORD 2 X 4 SYP No.2
BOT CHORD 2 X 4 SYP No.2
WEBS 2 X 4 SYP No.3 *Except*
W1: 2 X 6 SYP No.2

BRACING
TOP CHORD Structural wood sheathing directly applied or 3-3-3 oc purlins.
BOT CHORD Rigid ceiling directly applied or 5-4-3 oc bracing.

REACTIONS (lb/size) 10=718/0-1-8 (input: 0-3-8), 8=718/0-1-8 (input: 0-3-8)
Max Horz 10=87(LC 6)
Max Uplift10=-355(LC 6), 8=-355(LC 7)

FORCES (lb) - Max. Comp./Max. Ten. - All forces 250 (lb) or less except when shown.
TOP CHORD 1-12=-530/499, 2-12=-1835/1232, 2-3=-1779/1163, 3-4=-1527/845, 4-5=-1527/845, 5-6=-1779/1163, 6-15=-1835/1232, 7-15=-530/499
BOT CHORD 11-13=-677/734, 10-13=-1367/1820, 9-10=-984/1619, 8-9=-984/1619, 8-16=-1367/1820, 14-16=-678/735
WEBS 4-9=-313/835, 5-9=-266/398, 6-8=-527/863, 3-9=-266/383, 2-10=-527/863, 1-11=-325/321, 12-13=-664/0, 11-12=-1324/1254, 1-13=-1485/1567, 7-14=-326/321, 15-16=-663/0, 14-15=-1325/1255, 7-16=-1486/1567

NOTES
1) Unbalanced roof live loads have been considered for this design.
2) Wind: ASCE 7-05; 140mph (3-second gust); TCDL=4.2psf; BCDL=5.0psf; h=25ft; Cat. II; Exp B; enclosed; MWFRS (low-rise) and C-C Interior(1) zone; cantilever left and right exposed ;C-C for members and forces & MWFRS for reactions shown; Lumber DOL=1.60 plate grip DOL=1.60
3) This truss has been designed for a 10.0 psf bottom chord live load nonconcurrent with any other live loads.
4) * This truss has been designed for a live load of 20.0psf on the bottom chord in all areas where a rectangle 3-6-0 tall by 1-0-0 wide will fit between the bottom chord and any other members.
5) Provide mechanical connection (by others) of truss to bearing plate capable of withstanding 100 lb uplift at joint(s) except (jt=lb) 10=355, 8=355.

LOAD CASE(S) Standard

TOMAS PONCE
LICENSE
No. 50068
STATE OF
FLORIDA
PROFESSIONAL ENGINEER

FEB 2 4 2009

Job	Truss	Truss Type	Qty	Ply	BAYBURY_140_FLORIDA
BAYBURY	S1AX	SPECIAL	2	1	Job Reference (optional)

Maronda Homes Inc., Sanford, FL — 7.110 s Dec 15 2008 MiTek Industries, Inc. Wed Feb 04 15:06:11 2009 Page 1

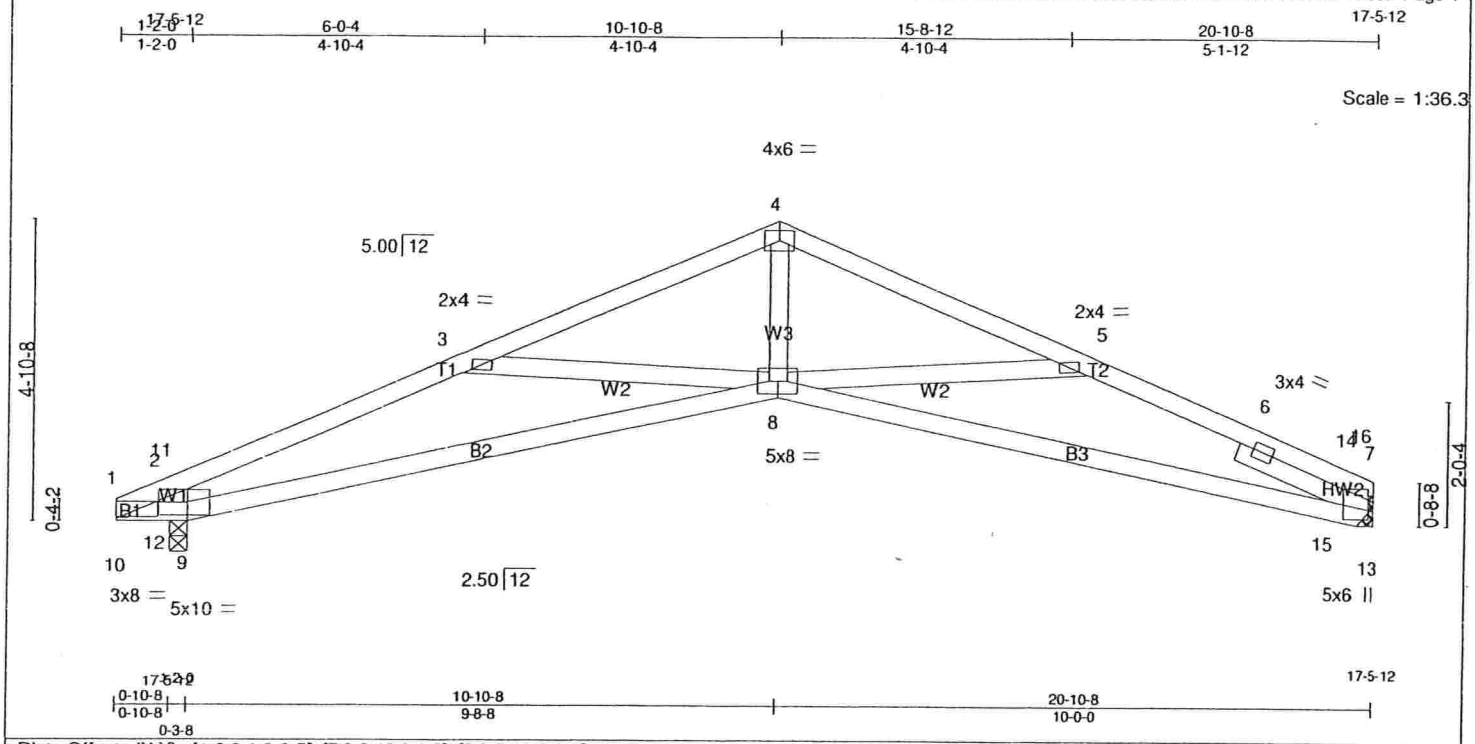

Plate Offsets (X,Y): [1:0-8-1,0-0-5], [7:0-2-10,0-1-2], [9:0-5-12,0-2-8]

LOADING (psf)		SPACING	2-0-0	CSI		DEFL	in	(loc)	l/defl	L/d	PLATES	GRIP
TCLL	16.0	Plates Increase	1.25	TC	0.68	Vert(LL)	0.25	8-15	>938	360	MT20	244/190
TCDL	7.0	Lumber Increase	1.25	BC	0.88	Vert(TL)	-0.39	8-15	>611	240		
BCLL	0.0 *	Rep Stress Incr	YES	WB	0.28	Horz(TL)	0.18	7	n/a	n/a		
BCDL	10.0	Code FRC2007/TPI2002		(Matrix-M)							Weight: 88 lb	

LUMBER
TOP CHORD 2 X 4 SYP No.2
BOT CHORD 2 X 4 SYP No.2
WEBS 2 X 4 SYP No.3 *Except*
W1: 2 X 6 SYP No.2
SLIDER Right 2 X 4 SYP No.3 2-6-0

BRACING
TOP CHORD Structural wood sheathing directly applied or 3-3-12 oc purlins.
BOT CHORD Rigid ceiling directly applied or 5-3-7 oc bracing.

REACTIONS (lb/size) 9=715/0-1-8 (input: 0-3-8), 13=663/Mechanical
Max Horz 9=99(LC 6)
Max Uplift9=-351(LC 6), 13=-282(LC 7)

FORCES (lb) - Max. Comp./Max. Ten. - All forces 250 (lb) or less except when shown.
TOP CHORD 1-11=-605/585, 2-11=-1860/1262, 2-3=-1802/1190, 3-4=-1539/869, 4-5=-1541/870, 5-6=-1761/1157, 6-14=-813/111, 7-14=-859/86
BOT CHORD 10-12=-795/836, 9-12=-1409/1855, 8-9=-1033/1643, 8-15=-992/1634, 13-15=-448/499
WEBS 2-9=-553/897, 3-8=-274/385, 4-8=-337/868, 5-8=-273/362, 1-10=-367/368, 11-12=-649/0, 10-11=-1488/1399, 1-12=-1657/1761, 6-16=-1209/1056, 7-13=-490/130, 7-16=0/599, 13-16=-391/416

NOTES
1) Unbalanced roof live loads have been considered for this design.
2) Wind: ASCE 7-05; 140mph (3-second gust); TCDL=4.2psf; BCDL=5.0psf; h=25ft; Cat. II; Exp B; enclosed; MWFRS (low-rise) and C-C Interior(1) zone; cantilever left exposed ;C-C for members and forces & MWFRS for reactions shown; Lumber DOL=1.60 plate grip DOL=1.60
3) This truss has been designed for a 10.0 psf bottom chord live load nonconcurrent with any other live loads.
4) * This truss has been designed for a live load of 20.0psf on the bottom chord in all areas where a rectangle 3-6-0 tall by 1-0-0 wide will fit between the bottom chord and any other members.
5) Refer to girder(s) for truss to truss connections.
6) Provide mechanical connection (by others) of truss to bearing plate capable of withstanding 100 lb uplift at joint(s) except (jt=lb) 9=351, 13=282.

LOAD CASE(S) Standard

TOMAS PONCE LICENSE No. 50068 STATE OF FLORIDA PROFESSIONAL ENGINEER

FEB 2 4 2009

Job	Truss	Truss Type	Qty	Ply	BAYBURY_140_FLORIDA
BAYBURY	S1BX	SPECIAL	2	1	Job Reference (optional)

Maronda Homes Inc., Sanford, FL — 7.110 s Dec 15 2008 MiTek Industries, Inc. Wed Feb 04 15:06:13 2009 Page 1

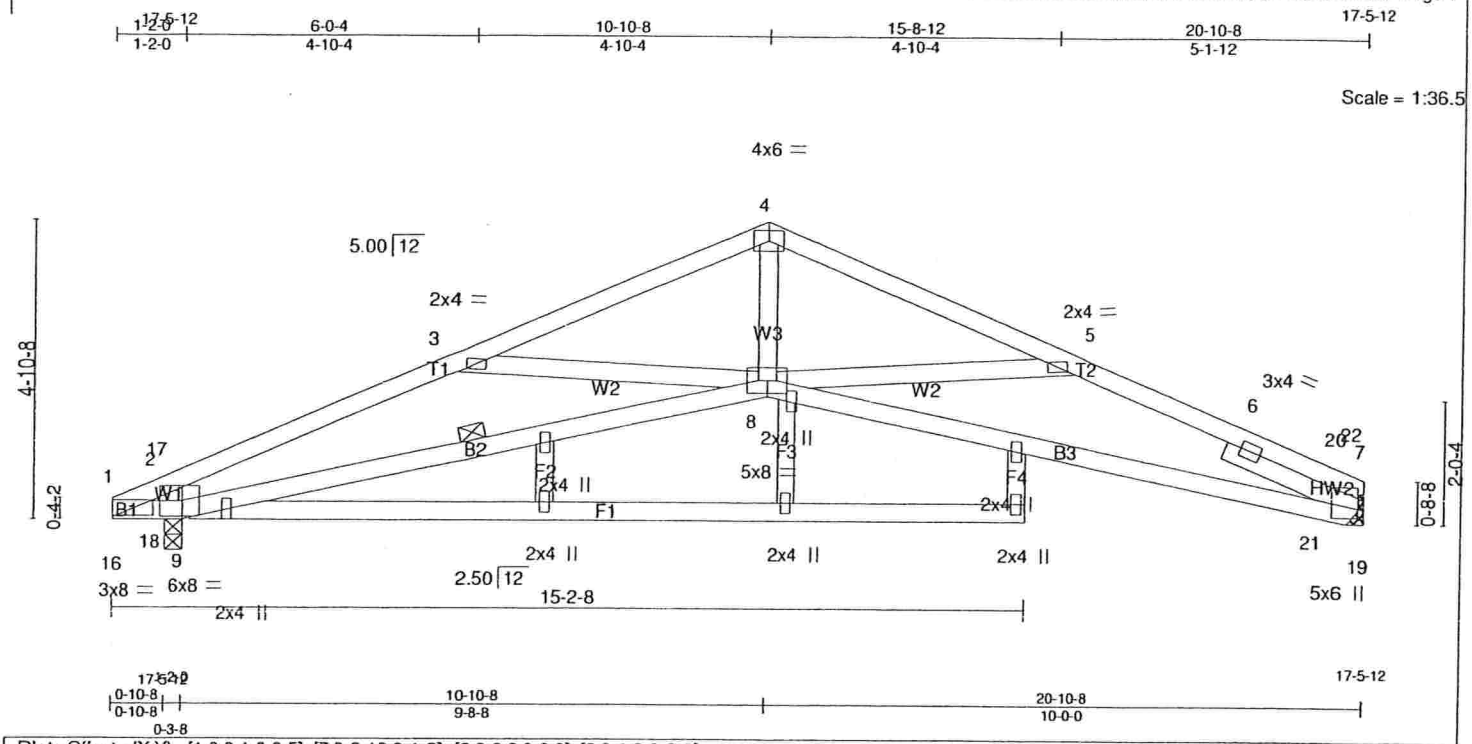

Plate Offsets (X,Y): [1:0-8-1,0-0-5], [7:0-2-10,0-1-2], [8:0-2-0,0-0-0], [9:0-4-8,0-3-0]

LOADING (psf)		SPACING	2-0-0	CSI		DEFL	in	(loc)	l/defl	L/d	PLATES	GRIP
TCLL	16.0	Plates Increase	1.25	TC	0.68	Vert(LL)	0.25	8-21	>938	360	MT20	244/190
TCDL	7.0	Lumber Increase	1.25	BC	0.88	Vert(TL)	-0.39	8-21	>611	240		
BCLL	0.0 *	Rep Stress Incr	YES	WB	0.28	Horz(TL)	0.18	7	n/a	n/a		
BCDL	10.0	Code FRC2007/TPI2002		(Matrix-M)							Weight: 114 lb	

LUMBER
TOP CHORD 2 X 4 SYP No.2
BOT CHORD 2 X 4 SYP No.2
WEBS 2 X 4 SYP No.3 *Except*
W1: 2 X 6 SYP No.2
SLIDER Right 2 X 4 SYP No.3 2-6-0

BRACING
TOP CHORD Structural wood sheathing directly applied or 3-3-12 oc purlins.
BOT CHORD Rigid ceiling directly applied or 5-3-7 oc bracing. Except:
6-0-0 oc bracing: 8-9

REACTIONS (lb/size) 9=715/0-1-8 (input: 0-3-8), 19=663/Mechanical
Max Horz 9=99(LC 6)
Max Uplift9=-351(LC 6), 19=-282(LC 7)

FORCES (lb) - Max. Comp./Max. Ten. - All forces 250 (lb) or less except when shown.
TOP CHORD 1-17=-605/585, 2-17=-1860/1262, 2-3=-1802/1190, 3-4=-1539/869, 4-5=-1541/870, 5-6=-1761/1157, 6-20=-813/111, 7-20=-859/86
BOT CHORD 16-18=-795/836, 9-18=-1409/1855, 8-9=-1033/1643, 8-21=-992/1634, 19-21=-448/499
WEBS 2-9=-553/897, 3-8=-274/385, 4-8=-337/868, 5-8=-273/362, 1-16=-367/368, 17-18=-649/0, 16-17=-1488/1399, 1-18=-1657/1761, 6-22=-1209/1056, 7-19=-490/130, 7-22=0/599, 19-22=-391/416

NOTES
1) Unbalanced roof live loads have been considered for this design.
2) Wind: ASCE 7-05; 140mph (3-second gust); TCDL=4.2psf; BCDL=5.0psf; h=25ft; Cat. II; Exp B; enclosed; MWFRS (low-rise) and C-C Interior(1) zone; cantilever left exposed ;C-C for members and forces & MWFRS for reactions shown; Lumber DOL=1.60 plate grip DOL=1.60
3) This truss has been designed for a 10.0 psf bottom chord live load nonconcurrent with any other live loads.
4) * This truss has been designed for a live load of 20.0psf on the bottom chord in all areas where a rectangle 3-6-0 tall by 1-0-0 wide will fit between the bottom chord and any other members.
5) Refer to girder(s) for truss to truss connections.
6) Provide mechanical connection (by others) of truss to bearing plate capable of withstanding 100 lb uplift at joint(s) except (jt=lb) 9=351, 19=282.

LOAD CASE(S) Standard

TOMAS PONCE
LICENSE
No. 50068
STATE OF
FLORIDA
PROFESSIONAL ENGINEER

FEB 2 4 2009

Job	Truss	Truss Type	Qty	Ply	BAYBURY_140_FLORIDA
BAYBURY	HS1X	SPECIAL	1	1	Job Reference (optional)

Maronda Homes Inc., Sanford, FL

7.110 s Dec 15 2008 MiTek Industries, Inc. Wed Feb 04 15:05:39 2009 Page 1

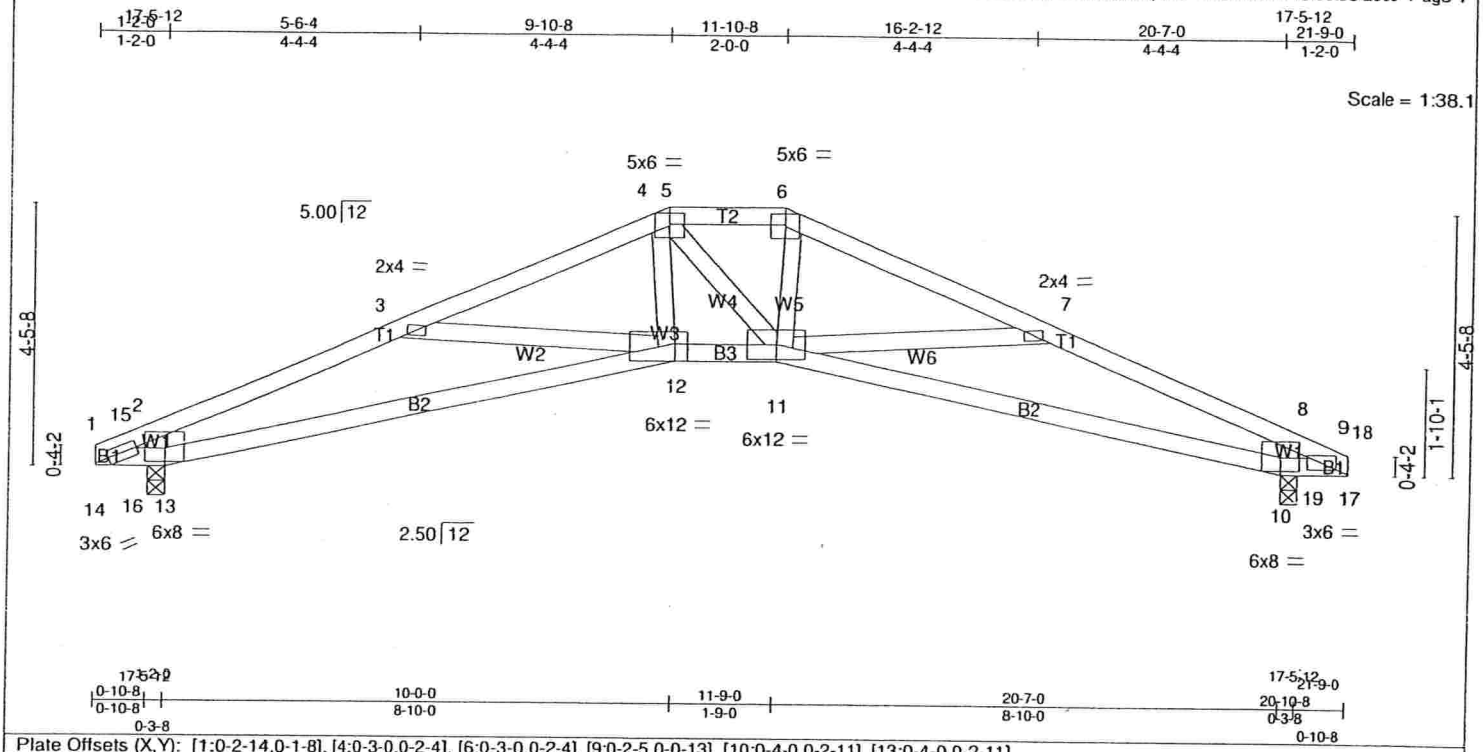

Plate Offsets (X,Y): [1:0-2-14,0-1-8], [4:0-3-0,0-2-4], [6:0-3-0,0-2-4], [9:0-2-5,0-0-13], [10:0-4-0,0-2-11], [13:0-4-0,0-2-11]

LOADING (psf)		SPACING	2-0-0	CSI		DEFL	in	(loc)	l/defl	L/d	PLATES	GRIP
TCLL	16.0	Plates Increase	1.25	TC	0.70	Vert(LL)	0.32	11-12	>735	360	MT20	244/190
TCDL	7.0	Lumber Increase	1.25	BC	0.85	Vert(TL)	-0.40	12-13	>577	240		
BCLL	0.0 *	Rep Stress Incr	YES	WB	0.21	Horz(TL)	0.22	10	n/a	n/a		
BCDL	10.0	Code FRC2007/TPI2002		(Matrix-M)							Weight: 92 lb	

LUMBER
TOP CHORD 2 X 4 SYP No.2
BOT CHORD 2 X 4 SYP No.2
WEBS 2 X 4 SYP No.3

BRACING
TOP CHORD Structural wood sheathing directly applied or 3-4-11 oc purlins.
BOT CHORD Rigid ceiling directly applied or 5-7-5 oc bracing.

REACTIONS (lb/size) 13=718/0-1-8 (input: 0-3-8), 10=717/0-1-8 (input: 0-3-8)
Max Horz 13=79(LC 6)
Max Uplift13=-348(LC 6), 10=-347(LC 7)

FORCES (lb) - Max. Comp./Max. Ten. - All forces 250 (lb) or less except when shown.
TOP CHORD 1-15=-493/444, 2-15=-1701/1079, 2-3=-1750/1166, 3-4=-1563/915, 4-5=-1370/868, 5-6=-1461/921, 6-7=-1576/922, 7-8=-1752/1170, 8-18=-1702/1082, 9-18=-506/458
BOT CHORD 14-16=-621/692, 13-16=-1214/1726, 12-13=-987/1583, 11-12=-683/1476, 10-11=-991/1585, 10-19=-1221/1732, 17-19=-641/710
WEBS 2-13=-610/835, 3-12=-166/311, 7-11=-156/325, 8-10=-626/846, 6-11=-163/447, 4-12=-144/415, 1-14=-307/299, 15-16=-495/0, 14-15=-1224/1163, 1-16=-1372/1439, 9-17=-314/307, 18-19=-482/0, 17-18=-1251/1188, 9-19=-1402/1471

NOTES
1) Unbalanced roof live loads have been considered for this design.
2) Wind: ASCE 7-05; 140mph (3-second gust); TCDL=4.2psf; BCDL=5.0psf; h=25ft; Cat. II; Exp B; enclosed; MWFRS (low-rise) and C-C Interior(1) zone; cantilever left and right exposed ;C-C for members and forces & MWFRS for reactions shown; Lumber DOL=1.60 plate grip DOL=1.60
3) Provide adequate drainage to prevent water ponding.
4) This truss has been designed for a 10.0 psf bottom chord live load nonconcurrent with any other live loads.
5) * This truss has been designed for a live load of 20.0psf on the bottom chord in all areas where a rectangle 3-6-0 tall by 1-0-0 wide will fit between the bottom chord and any other members.
6) Provide mechanical connection (by others) of truss to bearing plate capable of withstanding 100 lb uplift at joint(s) except (jt=lb) 13=348, 10=347.

LOAD CASE(S) Standard

TOMAS PONCE
LICENSE
No. 50068
STATE OF
FLORIDA
PROFESSIONAL ENGINEER

FEB 2 4 2009

Job	Truss	Truss Type	Qty	Ply	BAYBURY_140_FLORIDA
BAYBURY	HSGRD1X	SPECIAL	1	2	Job Reference (optional)

Maronda Homes Inc., Sanford, FL — 7.110 s Dec 15 2008 MiTek Industries, Inc. Wed Feb 04 15:05:41 2009 Page 1

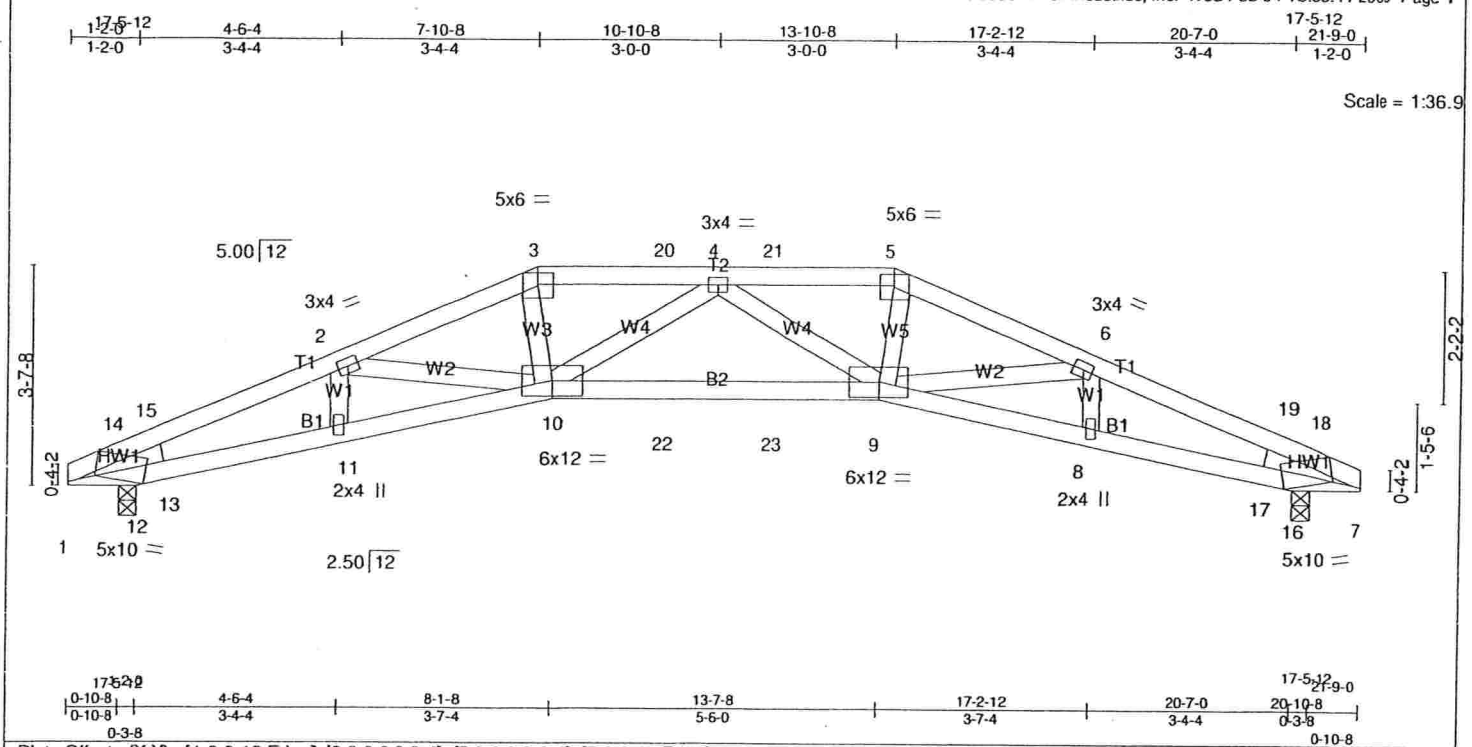

Plate Offsets (X,Y): [1:0-3-13,Edge], [3:0-3-0,0-2-4], [5:0-3-0,0-2-4], [7:0-3-13,Edge]

LOADING (psf)		SPACING	2-0-0	CSI		DEFL	in	(loc)	l/defl	L/d	PLATES	GRIP
TCLL	16.0	Plates Increase	1.25	TC	0.57	Vert(LL)	0.27	9-10	>982	360	MT20	244/190
TCDL	7.0	Lumber Increase	1.25	BC	0.83	Vert(TL)	-0.36	9-10	>725	240		
BCLL	0.0 *	Rep Stress Incr	NO	WB	0.20	Horz(TL)	0.20	7	n/a	n/a		
BCDL	10.0	Code FRC2007/TPI2002		(Matrix-M)							Weight: 197 lb	

LUMBER
TOP CHORD 2 X 4 SYP No.2 *Except*
T2: 2 X 4 SYP No.3
BOT CHORD 2 X 4 SYP No.2 *Except*
B2: 2 X 4 SYP No.3
WEBS 2 X 4 SYP No.3
WEDGE
Left: 2 X 4 SYP No.3, Right: 2 X 4 SYP No.3

BRACING
TOP CHORD Structural wood sheathing directly applied or 6-0-0 oc purlins.
BOT CHORD Rigid ceiling directly applied or 7-8-0 oc bracing.

REACTIONS (lb/size) 12=1301/0-1-8 (input: 0-3-8), 16=1301/0-1-8 (input: 0-3-8)
Max Horz 12=-55(LC 6)
Max Uplift12=-809(LC 5), 16=-809(LC 6)

FORCES (lb) - Max. Comp./Max. Ten. - All forces 250 (lb) or less except when shown.
TOP CHORD 14-15=-1609/1042, 2-15=-3227/2138, 2-3=-4201/2835, 3-20=-4052/2780, 4-20=-4052/2779, 4-21=-4052/2736, 5-21=-4052/2736, 5-6=-4201/2793, 6-19=-3227/2108, 18-19=-1609/1024
BOT CHORD 12-13=-887/1264, 11-13=-1926/2870, 10-11=-1981/2953, 10-22=-2716/4149, 22-23=-2716/4149, 9-23=-2716/4149, 8-9=-1898/2953, 8-17=-1844/2870, 16-17=-823/1264
WEBS 2-11=-338/295, 2-10=-746/1106, 6-9=-761/1106, 6-8=-338/291, 3-10=-829/1250, 5-9=-830/1250, 12-14=-885/576, 13-15=-382/296, 12-15=-1578/1032, 13-14=-1227/1889, 16-18=-885/566, 17-19=-382/290, 16-19=-1578/1022, 17-18=-1206/1889

NOTES
1) 2-ply truss to be connected together with 10d (0.120"x3") nails as follows:
Top chords connected as follows: 2 X 4 - 1 row at 0-9-0 oc.
Bottom chords connected as follows: 2 X 4 - 1 row at 0-9-0 oc.
Webs connected as follows: 2 X 4 - 1 row at 0-9-0 oc.
2) All loads are considered equally applied to all plies, except if noted as front (F) or back (B) face in the LOAD CASE(S) section. Ply to ply connections have been provided to distribute only loads noted as (F) or (B), unless otherwise indicated.
3) Unbalanced roof live loads have been considered for this design.
4) Wind: ASCE 7-05; 140mph (3-second gust); TCDL=4.2psf; BCDL=5.0psf; h=25ft; Cat. II; Exp B; enclosed; MWFRS (low-rise); cantilever left and right exposed ; Lumber DOL=1.60 plate grip DOL=1.60
5) Provide adequate drainage to prevent water ponding.
6) This truss has been designed for a 10.0 psf bottom chord live load nonconcurrent with any other live loads.
7) * This truss has been designed for a live load of 20.0psf on the bottom chord in all areas where a rectangle 3-6-0 tall by 1-0-0 wide will fit between the bottom chord and any other members.
8) Bearing at joint(s) 12, 16 considers parallel to grain value using ANSI/TPI 1 angle to grain formula. Building designer should verify capacity of bearing surface.
9) Provide mechanical connection (by others) of truss to bearing plate capable of withstanding 100 lb uplift at joint(s) except (jt=lb) 12=809, 16=809.

TOMAS PONCE LICENSE No. 50068 STATE OF FLORIDA PROFESSIONAL ENGINEER

FEB 2 4 2009

Continued on page 2

NOTES

10) Hanger(s) or other connection device(s) shall be provided sufficient to support concentrated load(s) 71 lb down and 58 lb up at 7-10-8, 71 lb down and 58 lb up at 9-11-4, and 71 lb down and 58 lb up at 11-9-12, and 71 lb down and 58 lb up at 13-10-8 on top chord, and 409 lb down and 374 lb up at 8-1-8, 91 lb down and 83 lb up at 9-11-4 , and 91 lb down and 83 lb up at 11-9-12, and 409 lb down and 374 lb up at 13-7-8 on bottom chord. The design/selection of such connection device(s) is the responsibility of others.

LOAD CASE(S) Standard

1) Regular: Lumber Increase=1.25, Plate Increase=1.25

Uniform Loads (plf)

Vert: 3-14=-46, 3-5=-46, 5-18=-46, 1-10=-20, 9-10=-20, 7-9=-20

Concentrated Loads (lb)

Vert: 3=-65(F) 9=-409(F) 10=-409(F) 5=-65(F) 20=-65(F) 21=-65(F) 22=-91(F) 23=-91(F)

TOMAS PONCE
LICENSE
No. 50068
STATE OF
FLORIDA
PROFESSIONAL ENGINEER

FEB 2 4 2009

Job	Truss	Truss Type	Qty	Ply	BAYBURY_140_FLORIDA
BAYBURY	JGRD1X	MONO TRUSS	3	1	Job Reference (optional)

Maronda Homes Inc., Sanford, FL

7.110 s Dec 15 2008 MiTek Industries, Inc. Wed Feb 04 15:05:49 2009 Page 1

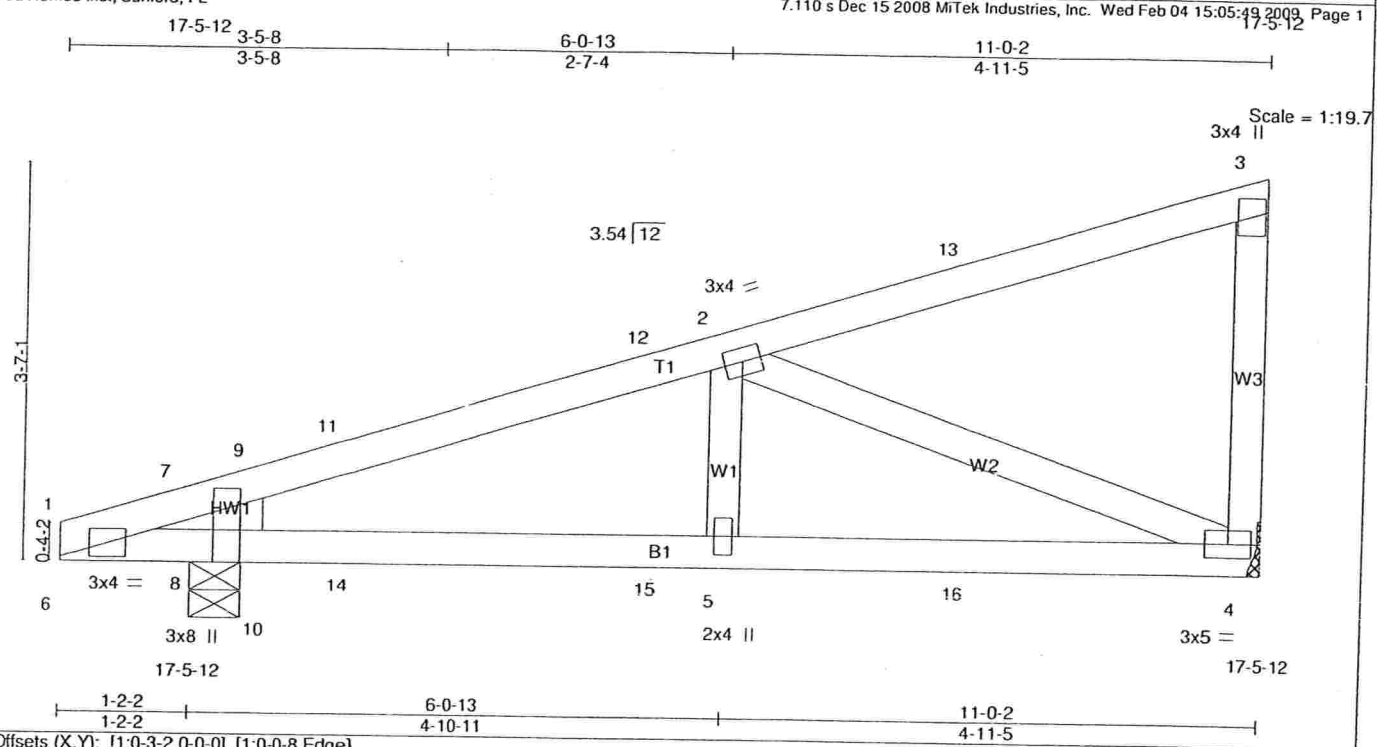

Plate Offsets (X,Y): [1:0-3-2,0-0-0], [1:0-0-8,Edge]

LOADING (psf)		SPACING	2-0-0	CSI		DEFL	in	(loc)	l/defl	L/d	PLATES	GRIP
TCLL	16.0	Plates Increase	1.25	TC	0.46	Vert(LL)	-0.03	4-5	>999	360	MT20	244/190
TCDL	7.0	Lumber Increase	1.25	BC	0.29	Vert(TL)	-0.07	4-5	>999	240		
BCLL	0.0 *	Rep Stress Incr	NO	WB	0.29	Horz(TL)	0.01	4	n/a	n/a		
BCDL	10.0	Code FRC2007/TPI2002		(Matrix-M)							Weight: 49 lb	

LUMBER
TOP CHORD 2 X 4 SYP No.2
BOT CHORD 2 X 4 SYP No.2
WEBS 2 X 4 SYP No.3
WEDGE
Left: 2 X 4 SYP No.3

BRACING
TOP CHORD Structural wood sheathing directly applied or 6-0-0 oc purlins, except end verticals.
BOT CHORD Rigid ceiling directly applied or 8-10-7 oc bracing.

REACTIONS (lb/size) 4=460/Mechanical, 8=457/0-1-8 (input: 0-5-11)
Max Horz 8=166(LC 3)
Max Uplift4=-331(LC 3), 8=-262(LC 3)

FORCES (lb) - Max. Comp./Max. Ten. - All forces 250 (lb) or less except when shown.
TOP CHORD 9-11=-691/405, 11-12=-684/410, 2-12=-640/402
BOT CHORD 10-14=-500/638, 14-15=-500/638, 5-15=-500/638, 5-16=-500/638, 4-16=-500/638
WEBS 2-4=-612/487, 8-9=-281/141

NOTES
1) Wind: ASCE 7-05; 140mph (3-second gust); TCDL=4.2psf; BCDL=5.0psf; h=25ft; Cat. II; Exp B; enclosed; MWFRS (low-rise); cantilever left exposed ; Lumber DOL=1.60 plate grip DOL=1.60
2) This truss has been designed for a 10.0 psf bottom chord live load nonconcurrent with any other live loads.
3) * This truss has been designed for a live load of 20.0psf on the bottom chord in all areas where a rectangle 3-6-0 tall by 1-0-0 wide will fit between the bottom chord and any other members.
4) Refer to girder(s) for truss to truss connections.
5) Provide mechanical connection (by others) of truss to bearing plate capable of withstanding 100 lb uplift at joint(s) except (jt=lb) 4=331, 8=262.
6) Hanger(s) or other connection device(s) shall be provided sufficient to support concentrated load(s) 23 lb up at 2-7-6, 23 lb up at 2-7-6, 8 lb down and 37 lb up at 5-5-5, 8 lb down and 37 lb up at 5-5-5, and 52 lb down and 82 lb up at 8-3-4, and 52 lb down and 82 lb up at 8-3-4 on top chord, and 5 lb up at 2-7-6, 5 lb up at 2-7-6, 11 lb down and 15 lb up at 5-5-5, 11 lb down and 15 lb up at 5-5-5, and 46 lb down and 14 lb up at 8-3-4, and 46 lb down and 14 lb up at 8-3-4 on bottom chord. The design/selection of such connection device(s) is the responsibility of others.
7) In the LOAD CASE(S) section, loads applied to the face of the truss are noted as front (F) or back (B).

LOAD CASE(S) Standard
1) Regular: Lumber Increase=1.25, Plate Increase=1.25
Uniform Loads (plf)
Vert: 1-3=-46, 4-6=-20
Concentrated Loads (lb)
Vert: 11=12(F=6, B=6) 12=-16(F=-8, B=-8) 13=-105(F=-52, B=-52) 14=5(F=3, B=3) 15=-22(F=-11, B=-11) 16=-73(F=-37, B=-37)

FEB 2 4 2009

TOMAS PONCE LICENSE No. 50068 STATE OF FLORIDA PROFESSIONAL ENGINEER

Job	Truss	Truss Type	Qty	Ply	BAYBURY_140_FLORIDA
BAYBURY	JX	MONO TRUSS	16	1	Job Reference (optional)

Maronda Homes Inc., Sanford, FL

7.110 s Dec 15 2008 MiTek Industries, Inc. Wed Feb 04 15:05:56 2009 Page 1

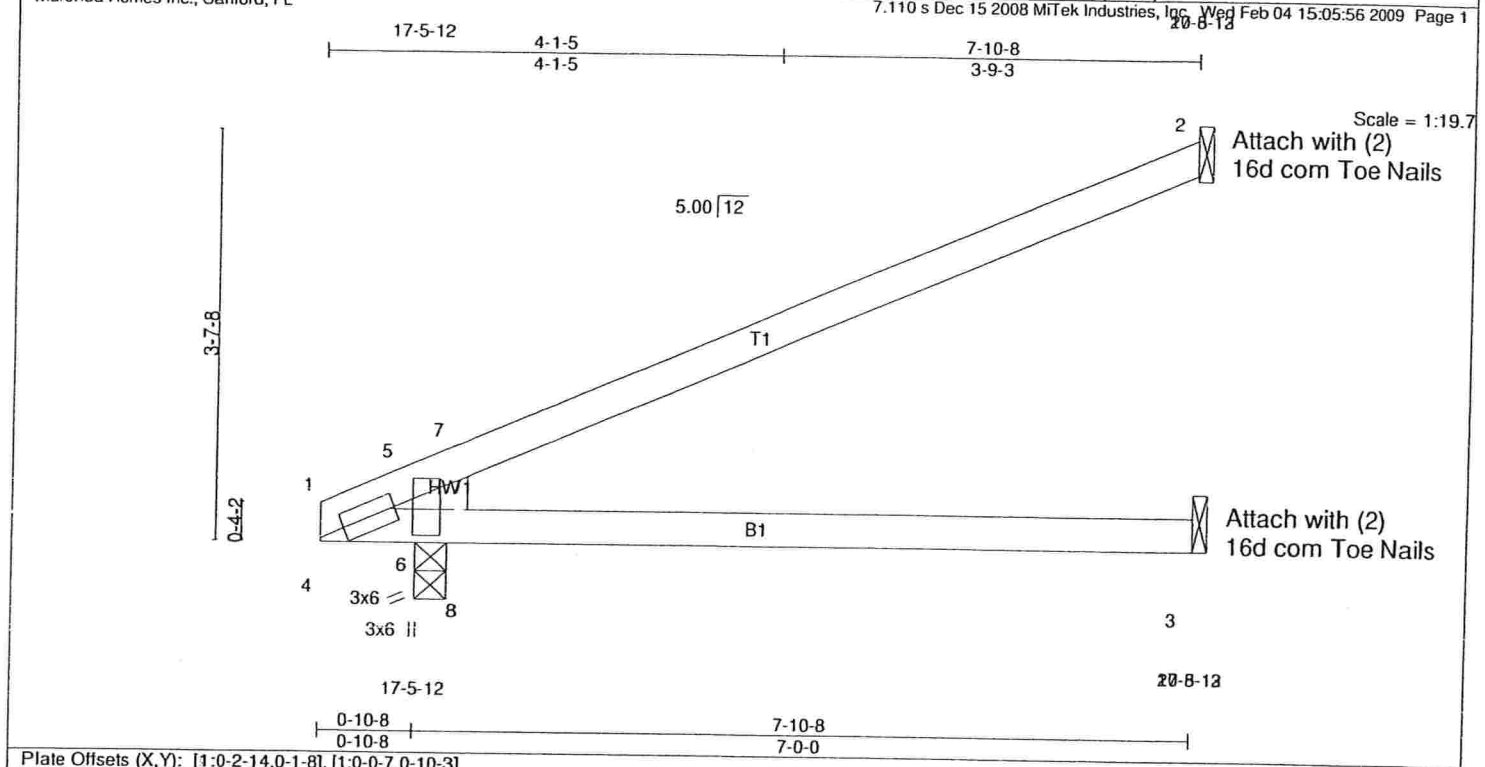

Plate Offsets (X,Y): [1:0-2-14,0-1-8], [1:0-0-7,0-10-3]

LOADING (psf)		SPACING	2-0-0	CSI		DEFL	in	(loc)	l/defl	L/d	PLATES	GRIP
TCLL	16.0	Plates Increase	1.25	TC	0.41	Vert(LL)	0.18	3-8	>515	360	MT20	244/190
TCDL	7.0	Lumber Increase	1.25	BC	0.40	Vert(TL)	-0.24	3-8	>390	240		
BCLL	0.0 *	Rep Stress Incr	YES	WB	0.00	Horz(TL)	-0.05	2	n/a	n/a		
BCDL	10.0	Code FRC2007/TPI2002		(Matrix-M)							Weight: 26 lb	

LUMBER
TOP CHORD 2 X 4 SYP No.2
BOT CHORD 2 X 4 SYP No.2
WEDGE
Left: 2 X 4 SYP No.3

BRACING
TOP CHORD Structural wood sheathing directly applied or 6-0-0 oc purlins.
BOT CHORD Rigid ceiling directly applied or 6-0-0 oc bracing.

REACTIONS (lb/size) 2=143/Mechanical, 3=82/Mechanical, 6=290/0-1-8 (input: 0-3-8)
Max Horz 6=169(LC 6)
Max Uplift2=-154(LC 6), 3=-2(LC 6), 6=-107(LC 6)
Max Grav2=143(LC 1), 3=125(LC 2), 6=290(LC 1)

FORCES (lb) - Max. Comp./Max. Ten. - All forces 250 (lb) or less except when shown.
BOT CHORD 6-8=-264/79
WEBS 7-8=-175/483

NOTES
1) Wind: ASCE 7-05; 140mph (3-second gust); TCDL=4.2psf; BCDL=5.0psf; h=25ft; Cat. II; Exp B; enclosed; MWFRS (low-rise) and C-C Interior(1) zone; cantilever left and right exposed ;C-C for members and forces & MWFRS for reactions shown; Lumber DOL=1.60 plate grip DOL=1.60
2) This truss has been designed for a 10.0 psf bottom chord live load nonconcurrent with any other live loads.
3) * This truss has been designed for a live load of 20.0psf on the bottom chord in all areas where a rectangle 3-6-0 tall by 1-0-0 wide will fit between the bottom chord and any other members.
4) Refer to girder(s) for truss to truss connections.
5) Provide mechanical connection (by others) of truss to bearing plate capable of withstanding 100 lb uplift at joint(s) 3 except (jt=lb) 2=154, 6=107.

LOAD CASE(S) Standard

TOMAS PONCE
LICENSE
No. 50068
STATE OF
FLORIDA
PROFESSIONAL ENGINEER

FEB 2 4 2009

Job	Truss	Truss Type	Qty	Ply	BAYBURY_140_FLORIDA
BAYBURY	JAX	MONO TRUSS	2	1	Job Reference (optional)

Maronda Homes Inc., Sanford, FL

7.110 s Dec 15 2008 MiTek Industries, Inc. Wed Feb 04 15:05:47 2009 Page 1

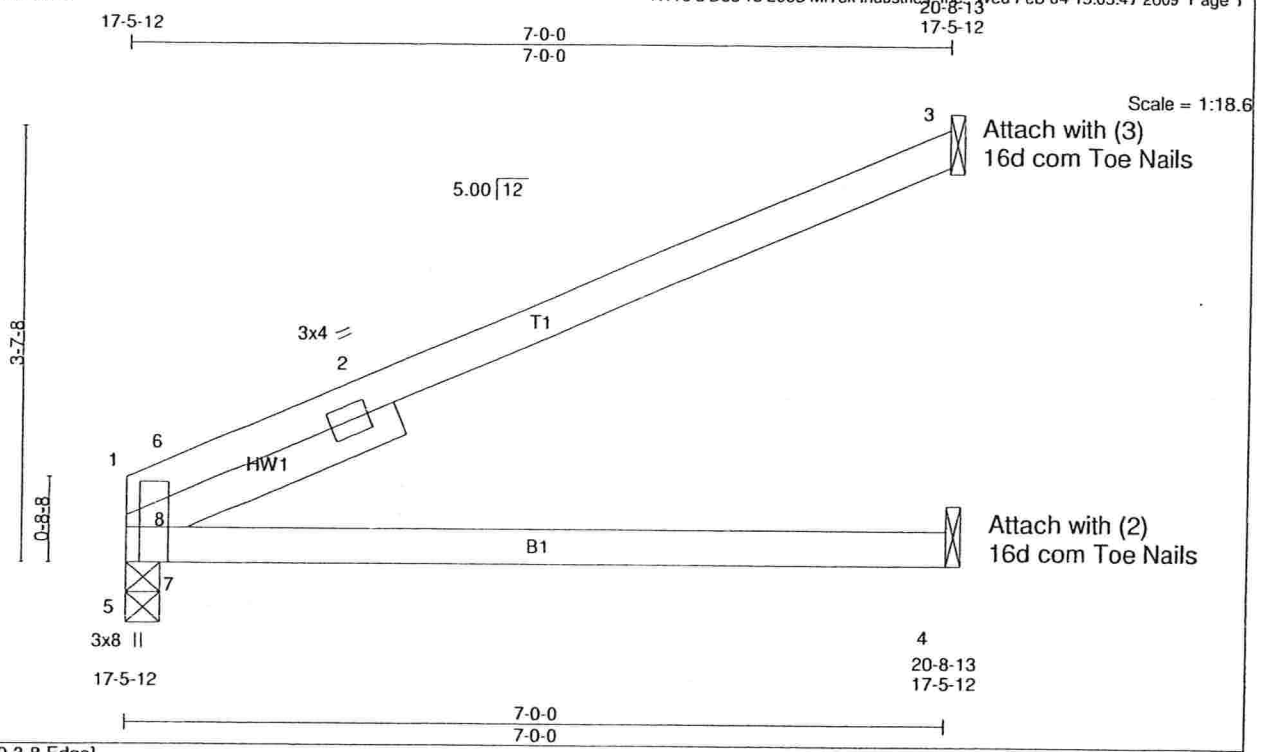

Plate Offsets (X,Y): [1:0-3-8,Edge]

LOADING (psf)		SPACING	2-0-0	CSI		DEFL	in	(loc)	l/defl	L/d	PLATES	GRIP
TCLL	16.0	Plates Increase	1.25	TC	0.42	Vert(LL)	0.19	4-7	>440	360	MT20	244/190
TCDL	7.0	Lumber Increase	1.25	BC	0.41	Vert(TL)	-0.23	4-7	>360	240		
BCLL	0.0 *	Rep Stress Incr	YES	WB	0.00	Horz(TL)	-0.05	3	n/a	n/a		
BCDL	10.0	Code FRC2007/TPI2002		(Matrix-M)							Weight: 26 lb	

LUMBER
TOP CHORD 2 X 4 SYP No.2
BOT CHORD 2 X 4 SYP No.2
SLIDER Left 2 X 4 SYP No.2 2-6-0

BRACING
TOP CHORD Structural wood sheathing directly applied or 6-0-0 oc purlins.
BOT CHORD Rigid ceiling directly applied or 6-0-0 oc bracing.

REACTIONS (lb/size) 5=229/0-1-8 (input: 0-3-8), 3=146/Mechanical, 4=83/Mechanical
Max Horz 5=150(LC 6)
Max Uplift5=-76(LC 6), 3=-153(LC 6), 4=-3(LC 6)
Max Grav 5=229(LC 1), 3=146(LC 1), 4=123(LC 2)

FORCES (lb) - Max. Comp./Max. Ten. - All forces 250 (lb) or less except when shown.
TOP CHORD 1-6=-403/0, 2-6=-431/0
BOT CHORD 5-7=-412/156
WEBS 1-5=-272/0, 7-8=-72/352, 6-8=-279/422, 1-8=0/336, 2-8=0/430

NOTES
1) Wind: ASCE 7-05; 140mph (3-second gust); TCDL=4.2psf; BCDL=5.0psf; h=25ft; Cat. II; Exp B; enclosed; MWFRS (low-rise) and C-C Interior(1) zone;C-C for members and forces & MWFRS for reactions shown; Lumber DOL=1.60 plate grip DOL=1.60
2) This truss has been designed for a 10.0 psf bottom chord live load nonconcurrent with any other live loads.
3) * This truss has been designed for a live load of 20.0psf on the bottom chord in all areas where a rectangle 3-6-0 tall by 1-0-0 wide will fit between the bottom chord and any other members.
4) Refer to girder(s) for truss to truss connections.
5) Provide mechanical connection (by others) of truss to bearing plate capable of withstanding 100 lb uplift at joint(s) 5, 4 except (jt=lb) 3=153.

LOAD CASE(S) Standard

TOMAS PONCE
LICENSE
No. 50068
STATE OF
FLORIDA
PROFESSIONAL ENGINEER

FEB 2 4 2009

Job	Truss	Truss Type	Qty	Ply	BAYBURY_140_FLORIDA_3WI07501
BAYBURY	JBX	MONO TRUSS	3	1	Job Reference (optional)

Maronda Homes Inc., Sanford, FL — 7.110 s Dec 15 2008 MiTek Industries, Inc. Mon Apr 20 08:31:43 2009 Page 1

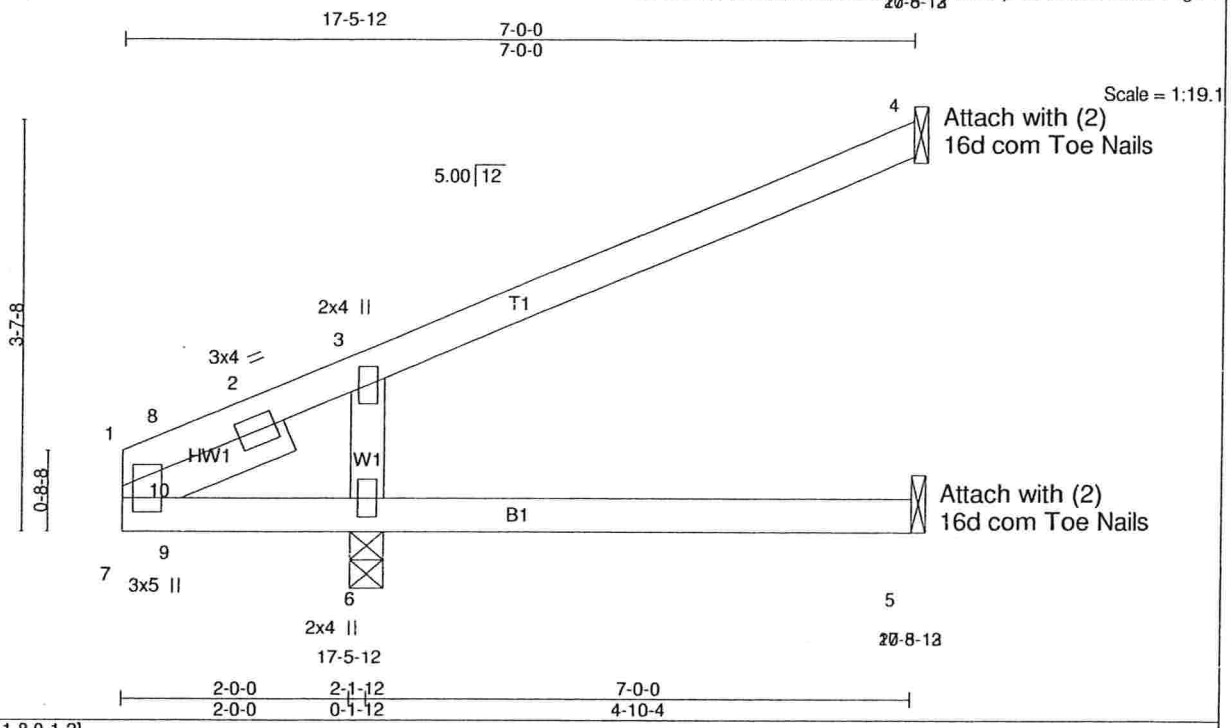

Plate Offsets (X,Y): [1:0-1-8,0-1-2]

LOADING (psf)		SPACING	2-0-0	CSI		DEFL	in	(loc)	l/defl	L/d	PLATES	GRIP
TCLL	16.0	Plates Increase	1.25	TC	0.27	Vert(LL)	0.04	5-6	>999	360	MT20	244/190
TCDL	7.0	Lumber Increase	1.25	BC	0.24	Vert(TL)	-0.04	5-6	>999	240		
BCLL	0.0 *	Rep Stress Incr	YES	WB	0.13	Horz(TL)	-0.07	4	n/a	n/a		
BCDL	10.0	Code FRC2007/TPI2002		(Matrix-M)							Weight: 26 lb	

LUMBER
TOP CHORD 2 X 4 SYP No.2
BOT CHORD 2 X 4 SYP No.2
WEBS 2 X 4 SYP No.3
SLIDER Left 2 X 4 SYP No.3 1-6-12

BRACING
TOP CHORD Structural wood sheathing directly applied or 6-0-0 oc purlins.
BOT CHORD Rigid ceiling directly applied or 10-0-0 oc bracing.

REACTIONS (lb/size) 4=88/Mechanical, 5=38/Mechanical, 6=331/0-1-8 (input: 0-3-8)
Max Horz 6=214(LC 6)
Max Uplift4=-169(LC 6), 5=-6(LC 5), 6=-304(LC 6)
Max Grav 4=88(LC 1), 5=77(LC 2), 6=331(LC 1)

FORCES (lb) - Max. Comp./Max. Ten. - All forces 250 (lb) or less except when shown.
TOP CHORD 2-3=-287/40
WEBS 3-6=-236/518, 2-10=-453/0

NOTES
1) Wind: ASCE 7-05; 140mph (3-second gust); TCDL=4.2psf; BCDL=5.0psf; h=25ft; Cat. II; Exp B; partially; MWFRS (low-rise) and C-C Interior(1) zone; cantilever left exposed ;C-C for members and forces & MWFRS for reactions shown; Lumber DOL=1.60 plate grip DOL=1.60
2) This truss has been designed for a 10.0 psf bottom chord live load nonconcurrent with any other live loads.
3) * This truss has been designed for a live load of 20.0psf on the bottom chord in all areas where a rectangle 3-6-0 tall by 1-0-0 wide will fit between the bottom chord and any other members.
4) Refer to girder(s) for truss to truss connections.
5) Provide mechanical connection (by others) of truss to bearing plate capable of withstanding 100 lb uplift at joint(s) 5 except (jt=lb) 4=169, 6=304.

LOAD CASE(S) Standard

TOMAS PONCE
LICENSE
No. 50068
STATE OF
FLORIDA
PROFESSIONAL ENGINEER

APR 2 0 2009

Job	Truss	Truss Type	Qty	Ply	BAYBURY_140_FLORIDA
BAYBURY	J1X	JACK	6	1	Job Reference (optional)

Maronda Homes Inc., Sanford, FL — 7.110 s Dec 15 2008 MiTek Industries, Inc. Wed Feb 04 15:05:43 2009 Page 1

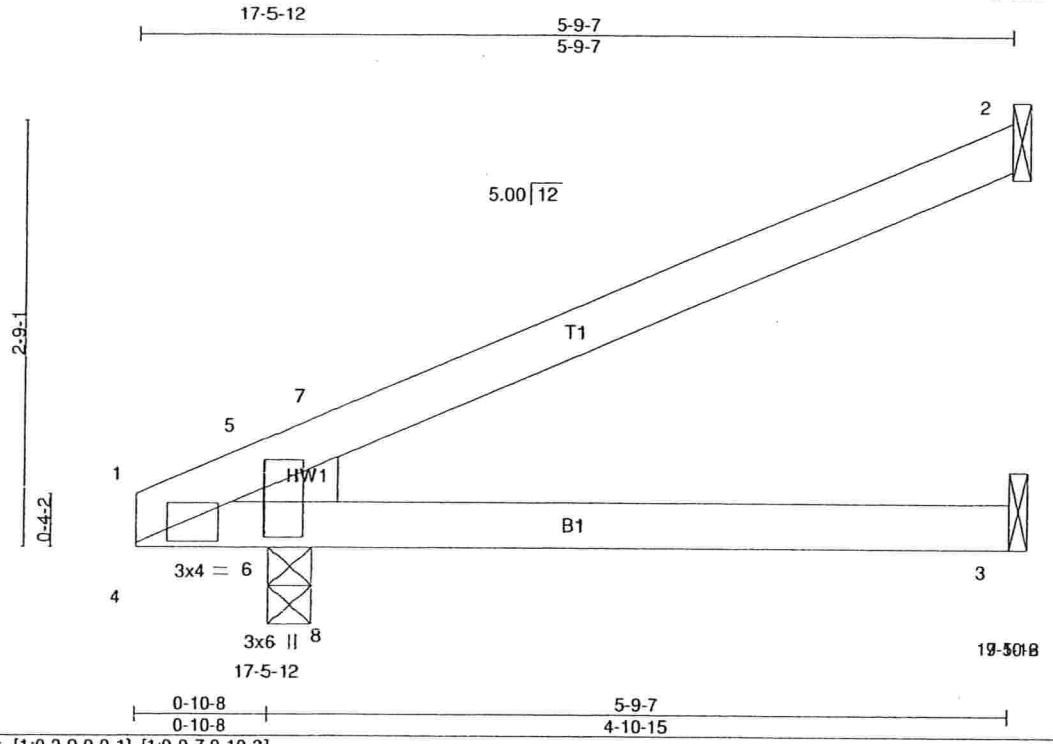

Plate Offsets (X,Y): [1:0-2-9,0-0-1], [1:0-0-7,0-10-3]

LOADING (psf)		SPACING	2-0-0	CSI		DEFL	in	(loc)	l/defl	L/d	PLATES	GRIP
TCLL	16.0	Plates Increase	1.25	TC	0.20	Vert(LL)	0.05	3-8	>999	360	MT20	244/190
TCDL	7.0	Lumber Increase	1.25	BC	0.21	Vert(TL)	-0.05	3-8	>999	240		
BCLL	0.0 *	Rep Stress Incr	YES	WB	0.00	Horz(TL)	-0.02	2	n/a	n/a		
BCDL	10.0	Code FRC2007/TPI2002		(Matrix-M)							Weight: 19 lb	

LUMBER
TOP CHORD 2 X 4 SYP No.2
BOT CHORD 2 X 4 SYP No.2
WEDGE
Left: 2 X 4 SYP No.3

BRACING
TOP CHORD Structural wood sheathing directly applied or 5-9-7 oc purlins.
BOT CHORD Rigid ceiling directly applied or 6-0-0 oc bracing.

REACTIONS (lb/size) 2=98/Mechanical, 3=57/Mechanical, 6=223/0-1-8 (input: 0-3-8)
Max Horz 6=124(LC 6)
Max Uplift2=-107(LC 6), 3=-4(LC 6), 6=-82(LC 6)
Max Grav 2=98(LC 1), 3=86(LC 2), 6=223(LC 1)

FORCES (lb) - Max. Comp./Max. Ten. - All forces 250 (lb) or less except when shown.
WEBS 7-8=-89/251

NOTES
1) Wind: ASCE 7-05; 140mph (3-second gust); TCDL=4.2psf; BCDL=5.0psf; h=25ft; Cat. II; Exp B; enclosed; MWFRS (low-rise) and C-C Interior(1) zone; cantilever left exposed ;C-C for members and forces & MWFRS for reactions shown; Lumber DOL=1.60 plate grip DOL=1.60
2) This truss has been designed for a 10.0 psf bottom chord live load nonconcurrent with any other live loads.
3) * This truss has been designed for a live load of 20.0psf on the bottom chord in all areas where a rectangle 3-6-0 tall by 1-0-0 wide will fit between the bottom chord and any other members.
4) Refer to girder(s) for truss to truss connections.
5) Provide mechanical connection (by others) of truss to bearing plate capable of withstanding 100 lb uplift at joint(s) 3, 6 except (jt=lb) 2=107.

LOAD CASE(S) Standard

TOMAS PONCE LICENSE No. 50068 STATE OF FLORIDA PROFESSIONAL ENGINEER

FEB 2 4 2009

Job	Truss	Truss Type	Qty	Ply	BAYBURY_140_FLORIDA
BAYBURY	J2X	JACK	6	1	Job Reference (optional)

Maronda Homes Inc., Sanford, FL — 7.110 s Dec 15 2008 MiTek Industries, Inc. Wed Feb 04 15:05:44 2009 Page 1

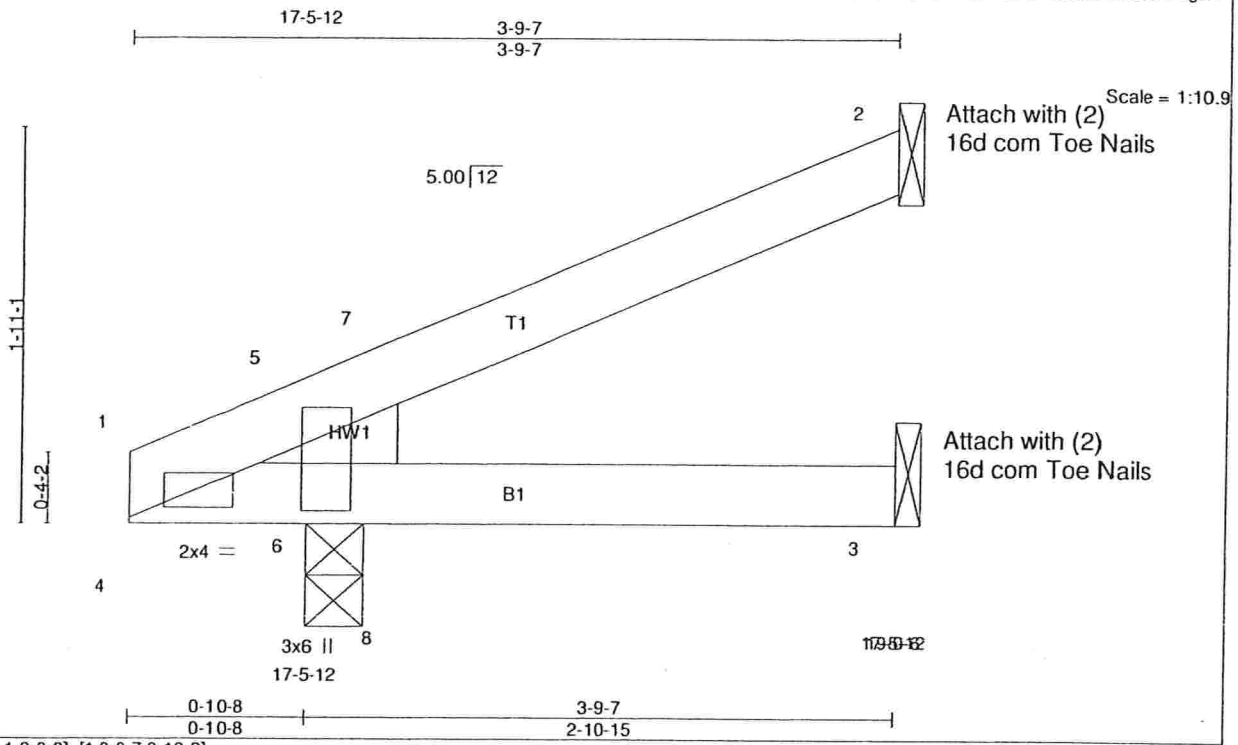

Plate Offsets (X,Y): [1:0-2-1,0-0-9], [1:0-0-7,0-10-3]

LOADING (psf)		SPACING	2-0-0	CSI		DEFL	in	(loc)	l/defl	L/d	PLATES	GRIP
TCLL	16.0	Plates Increase	1.25	TC	0.12	Vert(LL)	0.01	3-8	>999	360	MT20	244/190
TCDL	7.0	Lumber Increase	1.25	BC	0.13	Vert(TL)	-0.01	3-8	>999	240		
BCLL	0.0 *	Rep Stress Incr	YES	WB	0.00	Horz(TL)	-0.00	2	n/a	n/a		
BCDL	10.0	Code FRC2007/TPI2002		(Matrix-M)							Weight: 13 lb	

LUMBER
TOP CHORD 2 X 4 SYP No.3
BOT CHORD 2 X 4 SYP No.3
WEDGE
Left: 2 X 4 SYP No.3

BRACING
TOP CHORD Structural wood sheathing directly applied or 3-9-7 oc purlins.
BOT CHORD Rigid ceiling directly applied or 6-0-0 oc bracing.

REACTIONS (lb/size) 2=54/Mechanical, 3=31/Mechanical, 6=161/0-1-8 (input: 0-3-8)
Max Horz 6=81(LC 6)
Max Uplift 2=-62(LC 6), 3=-5(LC 6), 6=-59(LC 6)
Max Grav 2=54(LC 1), 3=47(LC 2), 6=161(LC 1)

FORCES (lb) - Max. Comp./Max. Ten. - All forces 250 (lb) or less except when shown.

NOTES
1) Wind: ASCE 7-05; 140mph (3-second gust); TCDL=4.2psf; BCDL=5.0psf; h=25ft; Cat. II; Exp B; enclosed; MWFRS (low-rise) and C-C Interior(1) zone; cantilever left exposed ;C-C for members and forces & MWFRS for reactions shown; Lumber DOL=1.60 plate grip DOL=1.60
2) This truss has been designed for a 10.0 psf bottom chord live load nonconcurrent with any other live loads.
3) * This truss has been designed for a live load of 20.0psf on the bottom chord in all areas where a rectangle 3-6-0 tall by 1-0-0 wide will fit between the bottom chord and any other members.
4) Refer to girder(s) for truss to truss connections.
5) Provide mechanical connection (by others) of truss to bearing plate capable of withstanding 100 lb uplift at joint(s) 2, 3, 6.

LOAD CASE(S) Standard

TOMAS PONCE
LICENSE
No. 50068
STATE OF
FLORIDA
PROFESSIONAL ENGINEER

FEB 24 2009

Job	Truss	Truss Type	Qty	Ply	BAYBURY_140_FLORIDA
BAYBURY	J3X	JACK	6	1	Job Reference (optional)

Maronda Homes Inc., Sanford, FL

7.110 s Dec 15 2008 MiTek Industries, Inc. Wed Feb 04 15:05:45 2009 Page 1

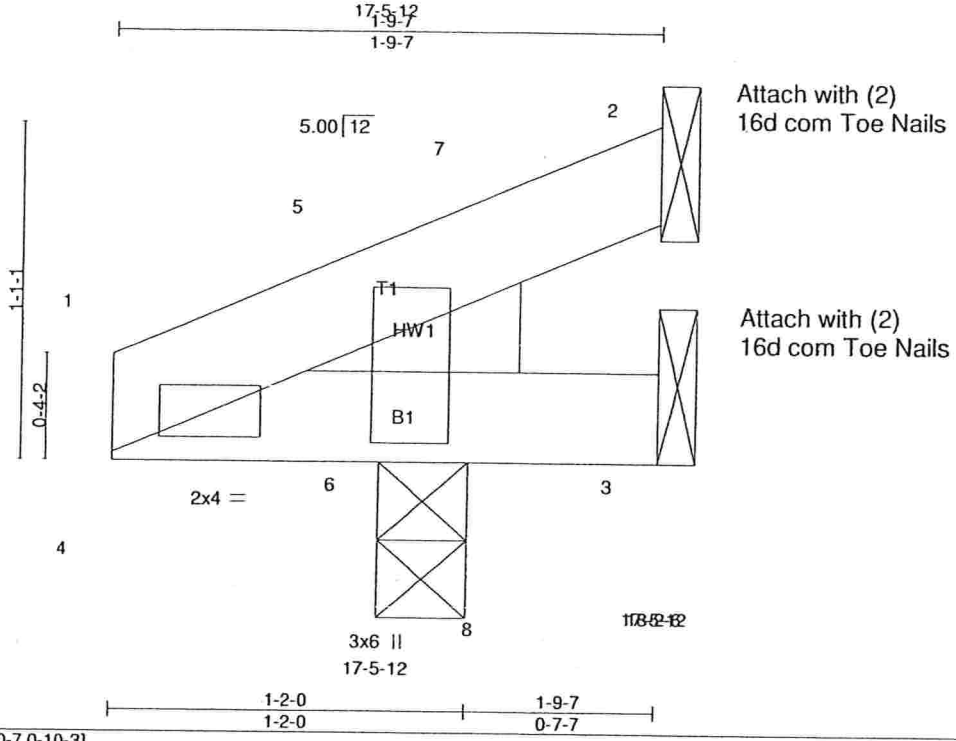

Plate Offsets (X,Y): [1:0-1-13,0-0-9], [1:0-0-7,0-10-3]

LOADING (psf)		SPACING	2-0-0	CSI		DEFL	in	(loc)	l/defl	L/d	PLATES	GRIP
TCLL	16.0	Plates Increase	1.25	TC	0.03	Vert(LL)	-0.00	4	>999	360	MT20	244/190
TCDL	7.0	Lumber Increase	1.25	BC	0.02	Vert(TL)	-0.00	4	>999	240		
BCLL	0.0 *	Rep Stress Incr	YES	WB	0.00	Horz(TL)	-0.00	1	n/a	n/a		
BCDL	10.0	Code FRC2007/TPI2002		(Matrix-M)							Weight: 7 lb	

LUMBER
TOP CHORD 2 X 4 SYP No.2
BOT CHORD 2 X 4 SYP No.2
WEDGE
Left: 2 X 4 SYP No.3

BRACING
TOP CHORD Structural wood sheathing directly applied or 1-9-7 oc purlins.
BOT CHORD Rigid ceiling directly applied or 6-0-0 oc bracing.

REACTIONS (lb/size) 3=-2/Mechanical, 6=116/0-1-8 (input: 0-3-8), 2=3/Mechanical
Max Horz 6=38(LC 6)
Max Uplift3=-3(LC 6), 6=-41(LC 6), 2=-15(LC 6)
Max Grav 3=3(LC 2), 6=116(LC 1), 2=3(LC 1)

FORCES (lb) - Max. Comp./Max. Ten. - All forces 250 (lb) or less except when shown.

NOTES
1) Wind: ASCE 7-05; 140mph (3-second gust); TCDL=4.2psf; BCDL=5.0psf; h=25ft; Cat. II; Exp B; enclosed; MWFRS (low-rise) and C-C Interior(1) zone;C-C for members and forces & MWFRS for reactions shown; Lumber DOL=1.60 plate grip DOL=1.60
2) This truss has been designed for a 10.0 psf bottom chord live load nonconcurrent with any other live loads.
3) * This truss has been designed for a live load of 20.0psf on the bottom chord in all areas where a rectangle 3-6-0 tall by 1-0-0 wide will fit between the bottom chord and any other members.
4) Refer to girder(s) for truss to truss connections.
5) Provide mechanical connection (by others) of truss to bearing plate capable of withstanding 100 lb uplift at joint(s) 3, 6, 2.

LOAD CASE(S) Standard

TOMAS PONCE
LICENSE
No. 50068
STATE OF
FLORIDA
PROFESSIONAL ENGINEER

FEB 2 4 2009

Job	Truss	Truss Type	Qty	Ply	BAYBURY_140_FLORIDA
BAYBURY	JSGRD1X	SPECIAL	2	1	Job Reference (optional)

Maronda Homes Inc., Sanford, FL

7.110 s Dec 15 2008 MiTek Industries, Inc. Wed Feb 04 15:05:54 2009 Page 1

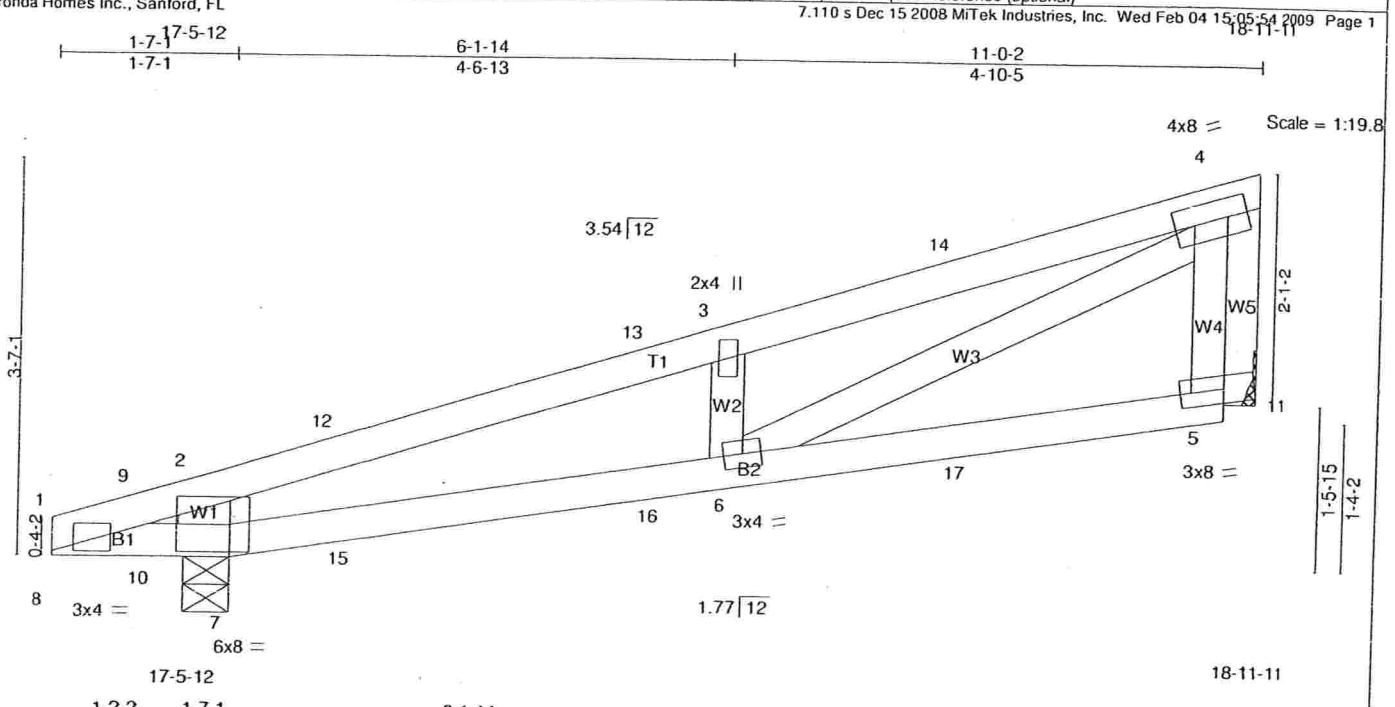

Plate Offsets (X,Y): [1:0-1-4,0-1-8], [5:0-4-11,0-1-8], [7:0-5-12,0-0-8]

LOADING (psf)		SPACING	.2-0-0	CSI		DEFL	in	(loc)	l/defl	L/d	PLATES	GRIP
TCLL	16.0	Plates Increase	1.25	TC	0.56	Vert(LL)	0.12	5-6	>971	360	MT20	244/190
TCDL	7.0	Lumber Increase	1.25	BC	0.93	Vert(TL)	-0.15	5-6	>743	240		
BCLL	0.0	Rep Stress Incr	NO	WB	0.26	Horz(TL)	0.01	11	n/a	n/a		
BCDL	10.0	Code FRC2007/TPI2002		(Matrix-M)							Weight: 47 lb	

LUMBER
TOP CHORD 2 X 4 SYP No.2
BOT CHORD 2 X 4 SYP No.2 *Except*
B1: 2 X 4 SYP No.3
WEBS 2 X 4 SYP No.3 *Except*
W1: 2 X 6 SYP No.2

BRACING
TOP CHORD Structural wood sheathing directly applied or 5-3-13 oc purlins, except end verticals.
BOT CHORD Rigid ceiling directly applied or 6-0-0 oc bracing.

REACTIONS (lb/size) 7=385/0-1-8 (input: 0-4-15), 11=450/Mechanical
Max Horz 7=162(LC 3)
Max Uplift7=-390(LC 3), 11=-334(LC 3)

FORCES (lb) - Max. Comp./Max. Ten. - All forces 250 (lb) or less except when shown.
TOP CHORD 1-9=-268/470, 2-9=-1046/721, 2-12=-974/662, 12-13=-969/671, 3-13=-910/640, 3-14=-958/732, 4-14=-913/719
BOT CHORD 8-10=-510/295, 7-10=-723/1059, 7-15=-730/904, 15-16=-737/890, 6-16=-730/905, 6-17=-191/264, 5-17=-202/285
WEBS 2-7=-356/334, 3-6=-224/310, 4-6=-625/729, 8-9=-1011/588, 1-10=-624/1074, 4-11=-465/346

NOTES
1) Wind: ASCE 7-05; 140mph (3-second gust); TCDL=4.2psf; BCDL=5.0psf; h=25ft; Cat. II; Exp B; enclosed; MWFRS (low-rise); cantilever left and right exposed ; Lumber DOL=1.60 plate grip DOL=1.60
2) This truss has been designed for a 10.0 psf bottom chord live load nonconcurrent with any other live loads.
3) * This truss has been designed for a live load of 20.0psf on the bottom chord in all areas where a rectangle 3-6-0 tall by 1-0-0 wide will fit between the bottom chord and any other members.
4) Refer to girder(s) for truss to truss connections.
5) Provide mechanical connection (by others) of truss to bearing plate capable of withstanding 100 lb uplift at joint(s) except (jt=lb) 7=390, 11=334.
6) Hanger(s) or other connection device(s) shall be provided sufficient to support concentrated load(s) 8 lb down and 21 lb up at 2-7-6, 8 lb down and 21 lb up at 2-7-6, 40 lb down and 80 lb up at 5-5-5, 40 lb down and 80 lb up at 5-5-5, and 41 lb down and 52 lb up at 8-3-4, and 41 lb down and 52 lb up at 8-3-4 on top chord, and 54 lb up at 2-7-6, 54 lb up at 2-7-6, 34 lb down at 5-5-5, 34 lb down at 5-5-5, and 46 lb down and 45 lb up at 8-3-4, and 46 lb down and 45 lb up at 8-3-4 on bottom chord. The design/selection of such connection device(s) is the responsibility of others.
7) In the LOAD CASE(S) section, loads applied to the face of the truss are noted as front (F) or back (B).

LOAD CASE(S) Standard
1) Regular: Lumber Increase=1.25, Plate Increase=1.25
Uniform Loads (plf)
Vert: 1-4=-46, 7-8=-20, 5-7=-20

FEB 2 4 2009

TOMAS PONCE LICENSE No. 50068 STATE OF FLORIDA PROFESSIONAL ENGINEER

Continued on page 2

LOAD CASE(S) Standard

Concentrated Loads (lb)

Vert: 12=42(F=21, B=21) 13=-79(F=-40, B=-40) 14=-81(F=-41, B=-41) 15=109(F=54, B=54) 16=-34(F=-17, B=-17) 17=-93(F=-46, B=-46)

FEB 2 4 2009

TOMAS PONCE
LICENSE
No. 50068
STATE OF
FLORIDA
PROFESSIONAL ENGINEER

Job	Truss	Truss Type	Qty	Ply	BAYBURY_140_FLORIDA
BAYBURY	JSX	SPECIAL	4	1	Job Reference (optional)

Maronda Homes Inc., Sanford, FL

7.110 s Dec 15 2008 MiTek Industries, Inc. Thu Feb 05 09:35:09 2009 Page 1

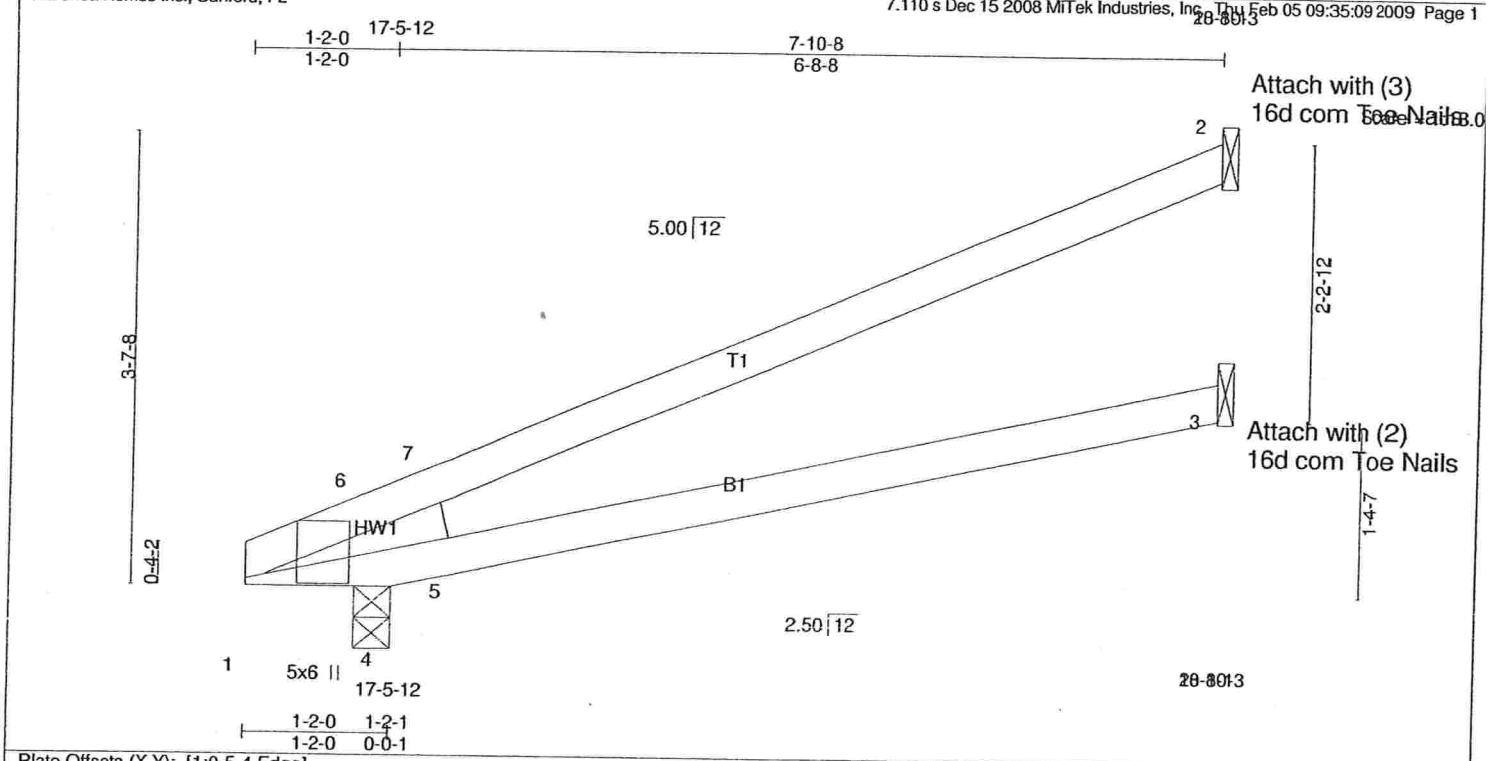

Plate Offsets (X,Y): [1:0-5-4,Edge]

LOADING (psf)		SPACING	2-0-0	CSI		DEFL	in	(loc)	l/defl	L/d	PLATES	GRIP
TCLL	16.0	Plates Increase	1.25	TC	0.39	Vert(LL)	0.18	3-5	>515	360	MT20	244/190
TCDL	7.0	Lumber Increase	1.25	BC	0.40	Vert(TL)	-0.22	3-5	>421	240		
BCLL	0.0 *	Rep Stress Incr	YES	WB	0.00	Horz(TL)	-0.06	2	n/a	n/a		
BCDL	10.0	Code FRC2007/TPI2002		(Matrix-M)							Weight: 27 lb	

LUMBER
TOP CHORD 2 X 4 SYP No.2
BOT CHORD 2 X 4 SYP No.2
WEDGE
Left: 2 X 4 SYP No.3

BRACING
TOP CHORD Structural wood sheathing directly applied or 6-0-0 oc purlins.
BOT CHORD Rigid ceiling directly applied or 6-0-0 oc bracing.

REACTIONS (lb/size) 2=141/Mechanical, 3=81/Mechanical, 4=246/0-1-8 (input: 0-3-8)
Max Horz 4=147(LC 6)
Max Uplift2=-152(LC 6), 3=-4(LC 6), 4=-62(LC 6)
Max Grav 2=141(LC 1), 3=122(LC 2), 4=246(LC 1)

FORCES (lb) - Max. Comp./Max. Ten. - All forces 250 (lb) or less except when shown.
WEBS 5-7=-166/449

NOTES
1) Wind: ASCE 7-05; 140mph (3-second gust); TCDL=4.2psf; BCDL=5.0psf; h=25ft; Cat. II; Exp B; enclosed; MWFRS (low-rise) and C-C Interior(1) zone; cantilever left exposed ;C-C for members and forces & MWFRS for reactions shown; Lumber DOL=1.60 plate grip DOL=1.60
2) This truss has been designed for a 10.0 psf bottom chord live load nonconcurrent with any other live loads.
3) * This truss has been designed for a live load of 20.0psf on the bottom chord in all areas where a rectangle 3-6-0 tall by 1-0-0 wide will fit between the bottom chord and any other members.
4) Refer to girder(s) for truss to truss connections.
5) Bearing at joint(s) 4 considers parallel to grain value using ANSI/TPI 1 angle to grain formula. Building designer should verify capacity of bearing surface.
6) Provide mechanical connection (by others) of truss to bearing plate capable of withstanding 152 lb uplift at joint 2, 4 lb uplift at joint 3 and 62 lb uplift at joint 4.

LOAD CASE(S) Standard

TOMAS PONCE
LICENSE
No. 50068
STATE OF FLORIDA
PROFESSIONAL ENGINEER

FEB 2 4 2009

Job	Truss	Truss Type	Qty	Ply	BAYBURY_140_FLORIDA
BAYBURY	JS1X	SPECIAL	4	1	Job Reference (optional)

Maronda Homes Inc., Sanford, FL — 7.110 s Dec 15 2008 MiTek Industries, Inc. Wed Feb 04 15:05:52 2009 Page 1

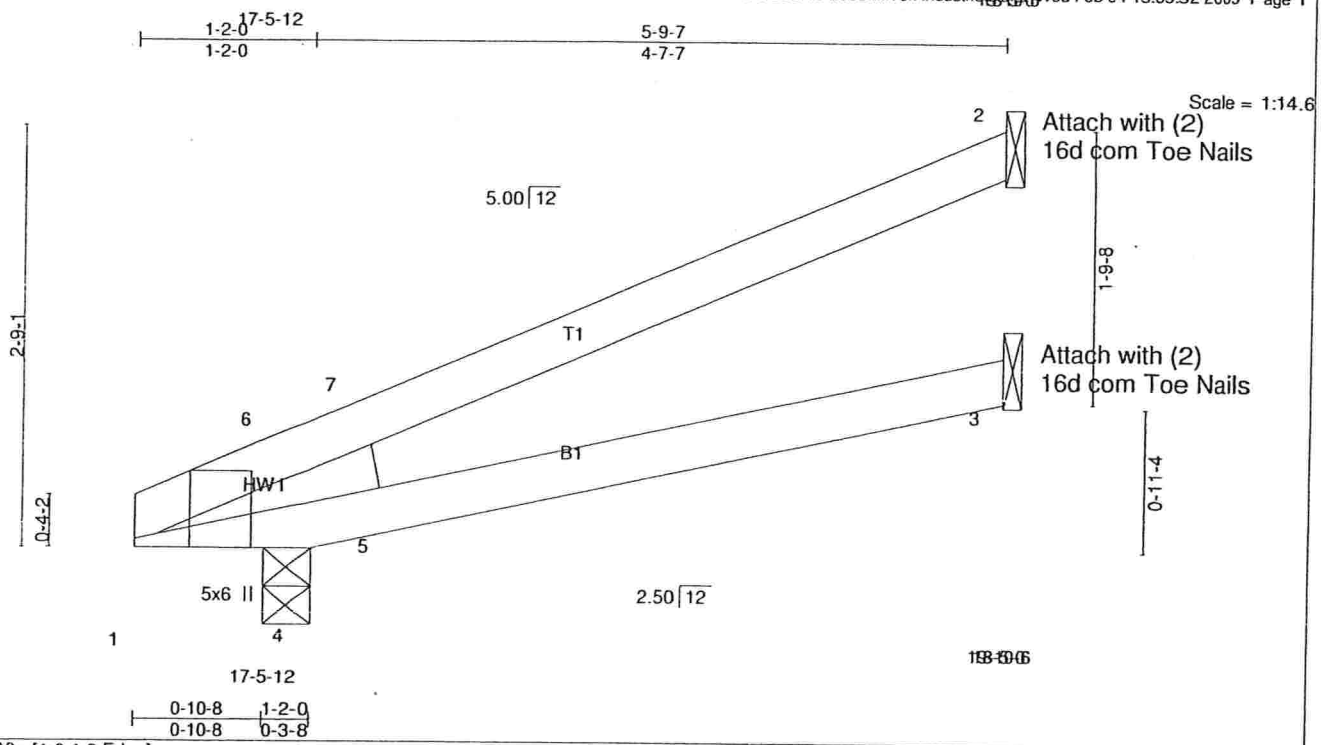

Plate Offsets (X,Y): [1:0-1-0,Edge]

LOADING (psf)		SPACING	2-0-0	CSI		DEFL	in	(loc)	l/defl	L/d	PLATES	GRIP
TCLL	16.0	Plates Increase	1.25	TC	0.19	Vert(LL)	0.05	3-5	>999	360	MT20	244/190
TCDL	7.0	Lumber Increase	1.25	BC	0.21	Vert(TL)	-0.05	3-5	>999	240		
BCLL	0.0 *	Rep Stress Incr	YES	WB	0.00	Horz(TL)	-0.02	2	n/a	n/a		
BCDL	10.0	Code FRC2007/TPI2002		(Matrix-M)							Weight: 21 lb	

LUMBER
TOP CHORD 2 X 4 SYP No.2
BOT CHORD 2 X 4 SYP No.2
WEDGE
Left: 2 X 4 SYP No.3

BRACING
TOP CHORD Structural wood sheathing directly applied or 5-9-7 oc purlins.
BOT CHORD Rigid ceiling directly applied or 6-0-0 oc bracing.

REACTIONS (lb/size) 2=97/Mechanical, 3=56/Mechanical, 4=178/0-1-8 (input: 0-3-8)
Max Horz 4=102(LC 6)
Max Uplift2=-105(LC 6), 3=-7(LC 6), 4=-36(LC 6)
Max Grav 2=97(LC 1), 3=83(LC 2), 4=178(LC 1)

FORCES (lb) - Max. Comp./Max. Ten. - All forces 250 (lb) or less except when shown.

NOTES
1) Wind: ASCE 7-05; 140mph (3-second gust); TCDL=4.2psf; BCDL=5.0psf; h=25ft; Cat. II; Exp B; enclosed; MWFRS (low-rise) and C-C Interior(1) zone; cantilever left exposed ;C-C for members and forces & MWFRS for reactions shown; Lumber DOL=1.60 plate grip DOL=1.60
2) This truss has been designed for a 10.0 psf bottom chord live load nonconcurrent with any other live loads.
3) * This truss has been designed for a live load of 20.0psf on the bottom chord in all areas where a rectangle 3-6-0 tall by 1-0-0 wide will fit between the bottom chord and any other members.
4) Refer to girder(s) for truss to truss connections.
5) Bearing at joint(s) 4 considers parallel to grain value using ANSI/TPI 1 angle to grain formula. Building designer should verify capacity of bearing surface.
6) Provide mechanical connection (by others) of truss to bearing plate capable of withstanding 100 lb uplift at joint(s) 3, 4 except (jt=lb) 2=105.

LOAD CASE(S) Standard

TOMAS PONCE LICENSE No. 50066 STATE OF FLORIDA PROFESSIONAL ENGINEER

FEB 2 4 2009

Job	Truss	Truss Type	Qty	Ply	BAYBURY_140_FLORIDA
BAYBURY	JS2X	SPECIAL	4	1	Job Reference (optional)

Maronda Homes Inc., Sanford, FL

7.110 s Dec 15 2008 MiTek Industries, Inc. Wed Feb 04 15:05:52 2009 Page 1

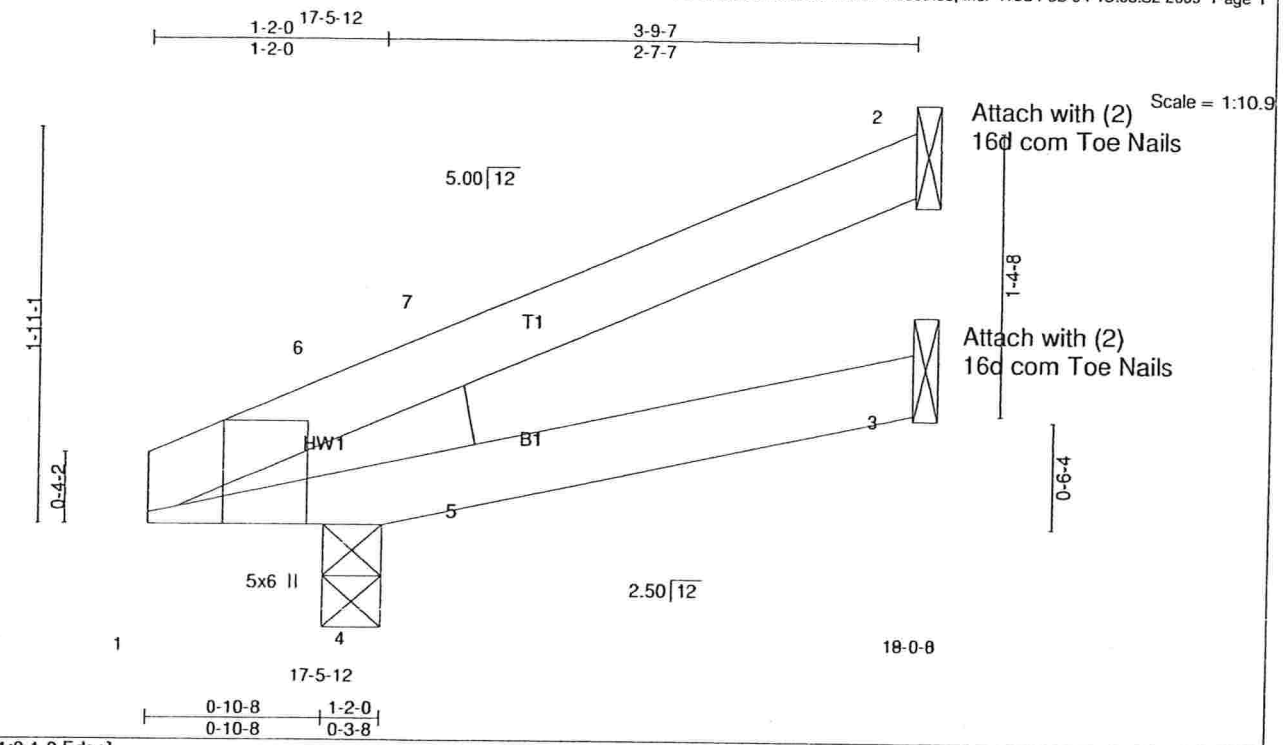

Plate Offsets (X,Y): [1:0-1-0,Edge]

LOADING (psf)		SPACING	2-0-0	CSI		DEFL	in	(loc)	l/defl	L/d	PLATES	GRIP
TCLL	16.0	Plates Increase	1.25	TC	0.06	Vert(LL)	-0.01	1	>999	360	MT20	244/190
TCDL	7.0	Lumber Increase	1.25	BC	0.08	Vert(TL)	-0.01	3-5	>999	240		
BCLL	0.0 *	Rep Stress Incr	YES	WB	0.00	Horz(TL)	-0.00	2	n/a	n/a		
BCDL	10.0	Code FRC2007/TPI2002		(Matrix-M)							Weight: 14 lb	

LUMBER
TOP CHORD 2 X 4 SYP No.2
BOT CHORD 2 X 4 SYP No.2
WEDGE
Left: 2 X 4 SYP No.3

BRACING
TOP CHORD Structural wood sheathing directly applied or 3-9-7 oc purlins.
BOT CHORD Rigid ceiling directly applied or 6-0-0 oc bracing.

REACTIONS (lb/size) 2=53/Mechanical, 3=32/Mechanical, 4=113/0-1-8 (input: 0-3-8)
Max Horz 4=59(LC 6)
Max Uplift2=-61(LC 6), 3=-9(LC 6), 4=-10(LC 6)
Max Grav 2=53(LC 1), 3=44(LC 2), 4=122(LC 2)

FORCES (lb) - Max. Comp./Max. Ten. - All forces 250 (lb) or less except when shown.

NOTES
1) Wind: ASCE 7-05; 140mph (3-second gust); TCDL=4.2psf; BCDL=5.0psf; h=25ft; Cat. II; Exp B; enclosed; MWFRS (low-rise) and C-C Interior(1) zone; cantilever left exposed ;C-C for members and forces & MWFRS for reactions shown; Lumber DOL=1.60 plate grip DOL=1.60
2) This truss has been designed for a 10.0 psf bottom chord live load nonconcurrent with any other live loads.
3) * This truss has been designed for a live load of 20.0psf on the bottom chord in all areas where a rectangle 3-6-0 tall by 1-0-0 wide will fit between the bottom chord and any other members.
4) Refer to girder(s) for truss to truss connections.
5) Bearing at joint(s) 4 considers parallel to grain value using ANSI/TPI 1 angle to grain formula. Building designer should verify capacity of bearing surface.
6) Provide mechanical connection (by others) of truss to bearing plate capable of withstanding 100 lb uplift at joint(s) 2, 3, 4.

LOAD CASE(S) Standard

TOMAS PONCE LICENSE No. 50068 STATE OF FLORIDA PROFESSIONAL ENGINEER

FEB 2 4 2009

Job	Truss	Truss Type	Qty	Ply	BAYBURY_140_FLORIDA
BAYBURY	JS3X	SPECIAL	4	1	Job Reference (optional)

Maronda Homes Inc., Sanford, FL

7.110 s Dec 15 2008 MiTek Industries, Inc. Wed Feb 04 15:05:53 2009 Page 1

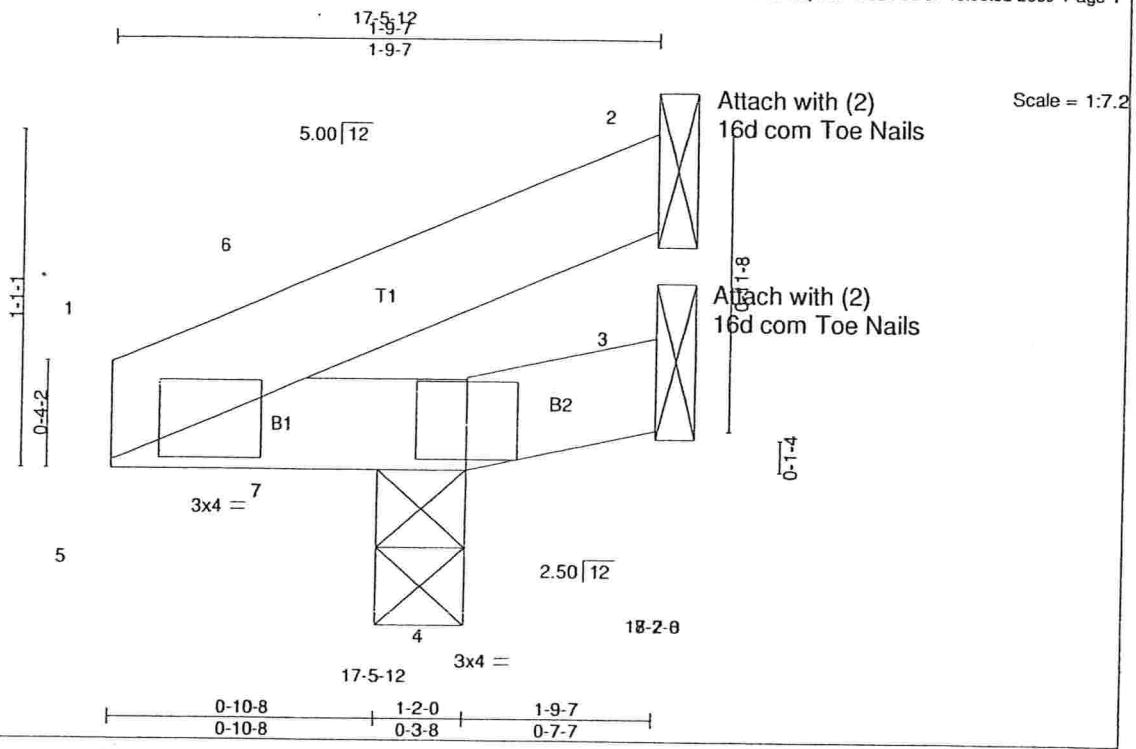

Plate Offsets (X,Y): [4:0-2-0,0-0-7]

LOADING (psf)		SPACING	2-0-0	CSI		DEFL	in	(loc)	l/defl	L/d	PLATES	GRIP
TCLL	16.0	Plates Increase	1.25	TC	0.08	Vert(LL)	-0.00	4	>999	360	MT20	244/190
TCDL	7.0	Lumber Increase	1.25	BC	0.25	Vert(TL)	-0.00	4	>999	240		
BCLL	0.0 *	Rep Stress Incr	YES	WB	0.00	Horz(TL)	0.01	2	n/a	n/a		
BCDL	10.0	Code FRC2007/TPI2002		(Matrix-M)							Weight: 6 lb	

LUMBER
TOP CHORD 2 X 4 SYP No.3
BOT CHORD 2 X 4 SYP No.3

BRACING
TOP CHORD Structural wood sheathing directly applied or 1-9-7 oc purlins.
BOT CHORD Rigid ceiling directly applied or 6-0-0 oc bracing.

REACTIONS (lb/size) 3=6/Mechanical, 4=102/0-1-8 (input: 0-3-8), 2=9/Mechanical
Max Horz 4=38(LC 6)
Max Uplift4=-94(LC 6), 2=-16(LC 5)
Max Grav 3=12(LC 2), 4=102(LC 1), 2=9(LC 1)

FORCES (lb) - Max. Comp./Max. Ten. - All forces 250 (lb) or less except when shown.
BOT CHORD 5-7=-138/261
WEBS 5-6=-181/324, 1-7=-399/224

NOTES
1) Wind: ASCE 7-05; 140mph (3-second gust); TCDL=4.2psf; BCDL=5.0psf; h=25ft; Cat. II; Exp B; enclosed; MWFRS (low-rise) and C-C Interior(1) zone; cantilever left and right exposed ;C-C for members and forces & MWFRS for reactions shown; Lumber DOL=1.60 plate grip DOL=1.60
2) This truss has been designed for a 10.0 psf bottom chord live load nonconcurrent with any other live loads.
3) * This truss has been designed for a live load of 20.0psf on the bottom chord in all areas where a rectangle 3-6-0 tall by 1-0-0 wide will fit between the bottom chord and any other members.
4) Refer to girder(s) for truss to truss connections.
5) Provide mechanical connection (by others) of truss to bearing plate capable of withstanding 100 lb uplift at joint(s) 4, 2.

LOAD CASE(S) Standard

TOMAS PONCE
LICENSE
No. 50068
STATE OF
FLORIDA
PROFESSIONAL ENGINEER

FEB 2 4 2009

Job	Truss	Truss Type	Qty	Ply	BAYBURY_140_FLORIDA
BAYBURY	MGRD1X	MONO TRUSS	1	1	Job Reference (optional)

Maronda Homes Inc., Sanford, FL

7.110 s Dec 15 2008 MiTek Industries, Inc. Thu Feb 05 09:35:07 2009 Page 1

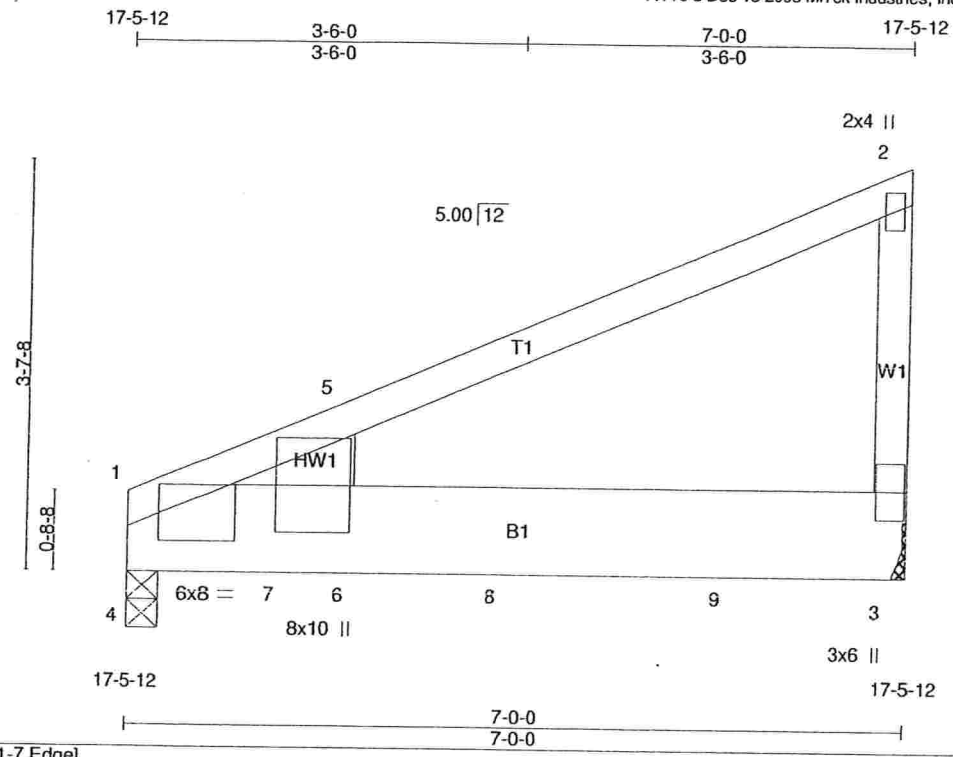

Plate Offsets (X,Y): [1:0-11-7,Edge]

LOADING (psf)		SPACING 2-0-0		CSI		DEFL	in	(loc)	l/defl	L/d	PLATES	GRIP
TCLL	16.0	Plates Increase	1.25	TC	0.34	Vert(LL)	0.09	3-6	>876	360	MT20	244/190
TCDL	7.0	Lumber Increase	1.25	BC	0.98	Vert(TL)	-0.15	3-6	>566	240		
BCLL	0.0 *	Rep Stress Incr	NO	WB	0.03	Horz(TL)	0.01	1	n/a	n/a		
BCDL	10.0	Code FRC2007/TPI2002		(Matrix-M)							Weight: 45 lb	

LUMBER
TOP CHORD 2 X 4 SYP No.2
BOT CHORD 2 X 10 SYP No.2
WEBS 2 X 4 SYP No.3
WEDGE
Left: 2 X 6 SYP No.2

BRACING
TOP CHORD Structural wood sheathing directly applied or 6-0-0 oc purlins.
BOT CHORD Rigid ceiling directly applied.

REACTIONS (lb/size) 3=1200/Mechanical, 4=1218/0-1-8 (input: 0-3-8)
Max Horz 4=148(LC 5)
Max Uplift3=-645(LC 5), 4=-585(LC 5)

FORCES (lb) - Max. Comp./Max. Ten. - All forces 250 (lb) or less except when shown.
BOT CHORD 4-7=-152/285, 6-7=-152/285

NOTES
1) Wind: ASCE 7-05; 140mph (3-second gust); TCDL=4.2psf; BCDL=5.0psf; h=25ft; Cat. II; Exp B; enclosed; MWFRS (low-rise); cantilever left and right exposed ; Lumber DOL=1.60 plate grip DOL=1.60
2) This truss has been designed for a 10.0 psf bottom chord live load nonconcurrent with any other live loads.
3) * This truss has been designed for a live load of 20.0psf on the bottom chord in all areas where a rectangle 3-6-0 tall by 1-0-0 wide will fit between the bottom chord and any other members.
4) Refer to girder(s) for truss to truss connections.
5) Provide mechanical connection (by others) of truss to bearing plate capable of withstanding 645 lb uplift at joint 3 and 585 lb uplift at joint 4.
6) Hanger(s) or other connection device(s) shall be provided sufficient to support concentrated load(s) 655 lb down and 333 lb up at 1-4-12, and 655 lb down and 333 lb up at 3-4-12, and 655 lb down and 333 lb up at 5-4-12 on bottom chord. The design/selection of such connection device(s) is the responsibility of others.
7) In the LOAD CASE(S) section, loads applied to the face of the truss are noted as front (F) or back (B).

LOAD CASE(S) Standard
1) Regular: Lumber Increase=1.25, Plate Increase=1.25
Uniform Loads (plf)
Vert: 1-2=-46, 3-4=-20
Concentrated Loads (lb)
Vert: 7=-655(F) 8=-655(F) 9=-655(F)

TOMAS PONCE
LICENSE
No. 50068
STATE OF
FLORIDA
PROFESSIONAL ENGINEER

FEB 2 4 2009

Job	Truss	Truss Type	Qty	Ply	BAYBURY_140_FLORIDA_3WI07501
BAYBURY	C2X	MONO TRUSS	2	1	Job Reference (optional)

Maronda Homes Inc., Sanford, FL

7.110 s Dec 15 2008 MiTek Industries, Inc. Mon Apr 20 08:31:42 2009 Page 1

Sheet Front Full Sheathing
1 Ply Plywood/OSB Structural

Scale = 1:61.8

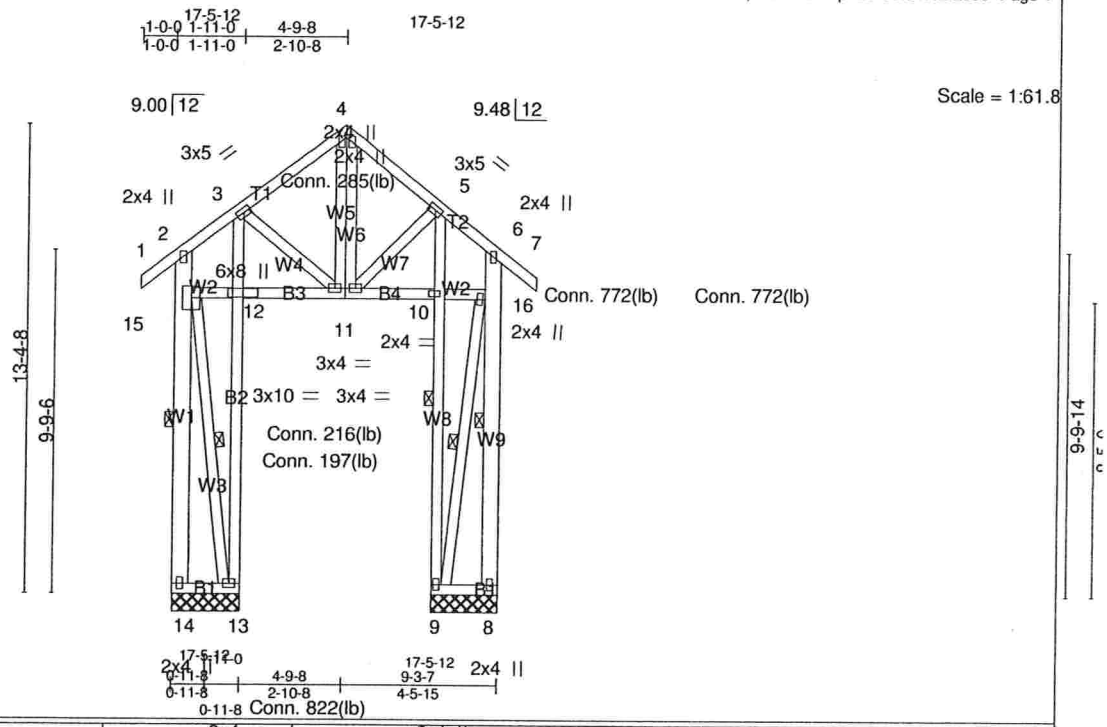

LOADING (psf)		SPACING	2-0-0	CSI		DEFL	in	(loc)	l/defl	L/d	PLATES	GRIP
TCLL	16.0	Plates Increase	1.25	TC	0.22	Vert(LL)	-0.00	11-12	>999	360	MT20	244/190
TCDL	7.0	Lumber Increase	1.25	BC	0.13	Vert(TL)	-0.01	10-11	>999	240		
BCLL	0.0 *	Rep Stress Incr	YES	WB	0.21	Horz(TL)	-0.09	13	n/a	n/a		
BCDL	10.0	Code FRC2007/TPI2002		(Matrix-M)							Weight: 162 lb	

LUMBER
TOP CHORD 2 X 4 SYP No.2
BOT CHORD 2 X 4 SYP No.2 *Except*
B3,B4: 2 X 4 SYP No.3
WEBS 2 X 4 SYP No.3 *Except*
W1,W9: 2 X 6 SYP No.2, W3,W8: 2 X 4 SYP No.2

BRACING
TOP CHORD Structural wood sheathing directly applied or 4-9-8 oc purlins, except end verticals.
BOT CHORD Rigid ceiling directly applied or 6-0-0 oc bracing.
WEBS 1 Row at midpt 2-14, 13-15, 5-9, 6-8, 9-16

REACTIONS All bearings 1-11-0.
(lb) - Max Horz 9=146(LC 5)
Max Uplift All uplift 100 lb or less at joint(s) 13 except 14=-200(LC 6), 8=-768(LC 5), 9=-807(LC 4), 12=-191(LC 7)
Max Grav All reactions 250 lb or less at joint(s) 14, 13, 12 except 8=668(LC 4), 9=587(LC 5)

FORCES (lb) - Max. Comp./Max. Ten. - All forces 250 (lb) or less except when shown.
TOP CHORD 3-4=-107/251, 14-15=-87/311, 2-15=-91/335
WEBS 8-16=-661/776, 6-16=-88/322, 9-16=-736/785

NOTES
1) Unbalanced roof live loads have been considered for this design.
2) Wind: ASCE 7-05; 140mph (3-second gust); TCDL=4.2psf; BCDL=5.0psf; h=25ft; Cat. II; Exp B; partially; MWFRS (low-rise) and C-C Interior(1) zone;C-C for members and forces & MWFRS for reactions shown; Lumber DOL=1.60 plate grip DOL=1.60
3) All additional member connections shall be provided by others for forces as indicated.
4) This truss has been designed for a 10.0 psf bottom chord live load nonconcurrent with any other live loads.
5) * This truss has been designed for a live load of 20.0psf on the bottom chord in all areas where a rectangle 3-6-0 tall by 1-0-0 wide will fit between the bottom chord and any other members.
6) Bearing at joint(s) 12 considers parallel to grain value using ANSI/TPI 1 angle to grain formula. Building designer should verify capacity of bearing surface.
7) Provide mechanical connection (by others) of truss to bearing plate capable of withstanding 100 lb uplift at joint(s) 13 except (jt=lb) 14=200, 8=768, 9=807, 12=191.
8) Design assumes 4x2 (flat orientation) purlins at oc spacing indicated, fastened to truss TC w/ 2-10d nails.

LOAD CASE(S) Standard

TOMAS PONCE
LICENSE
No. 50068
STATE OF
FLORIDA
PROFESSIONAL ENGINEER

APR 2 0 2009

Job	Truss	Truss Type	Qty	Ply	BAYBURY_140_FLORIDA
BAYBURY	V1X	VALLEY	1	1	Job Reference (optional)

Maronda Homes Inc., Sanford, FL

7.110 s Dec 15 2008 MiTek Industries, Inc. Wed Feb 04 15:06:15 2009 Page 1

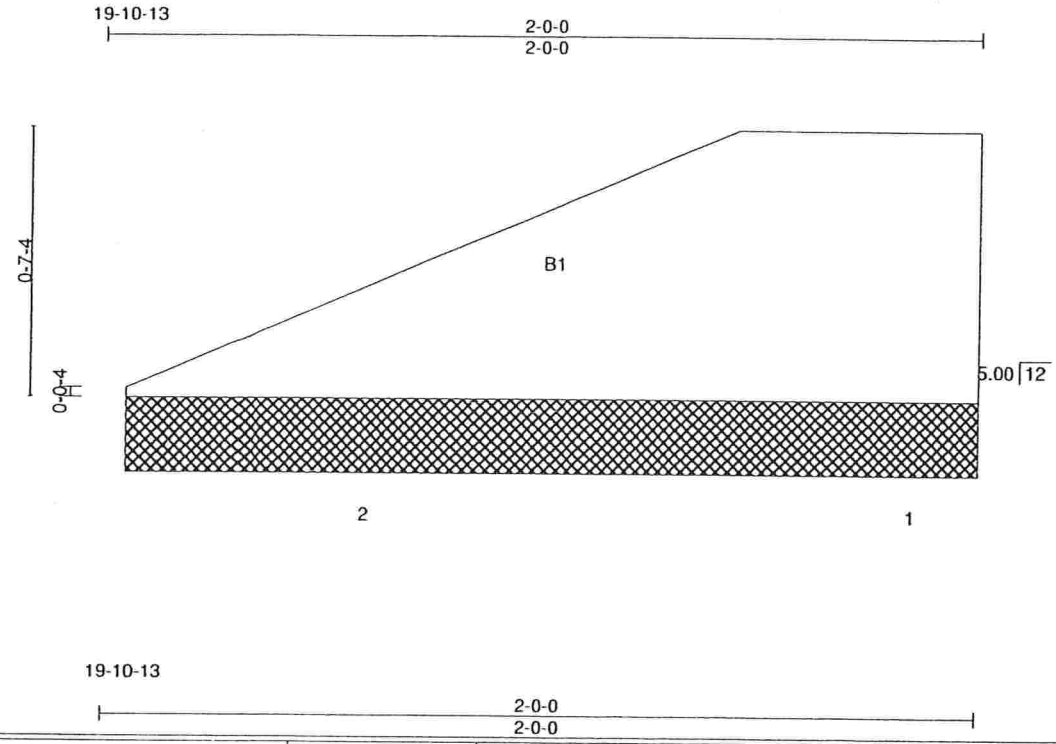

LOADING (psf)		SPACING 2-0-0		CSI		DEFL	in	(loc)	l/defl	L/d	PLATES	GRIP
TCLL	16.0	Plates Increase	0.90	TC	0.00	Vert(LL)	n/a	-	n/a	999		
TCDL	7.0	Plt. Metal Increase	0.90	BC	0.00	Vert(TL)	n/a	-	n/a	999		
BCLL	0.0 *	Lumber Increase	0.90	WB	0.00	Horz(TL)	0.00		n/a	n/a		
BCDL	10.0	Rep Stress Incr	YES	(Matrix)							Weight: 6 lb	
		Code FRC2007/TPI2002										

LUMBER
BOT CHORD 2 X 8 SYP No.2

BRACING
BOT CHORD Rigid ceiling directly applied or 10-0-0 oc bracing.

REACTIONS (lb/size) 2=12/0-1-8 (input: 1-11-6), 1=12/0-1-8 (input: 1-11-6)
Max Grav 2=25(LC 2), 1=25(LC 2)

FORCES (lb) - Max. Comp./Max. Ten. - All forces 250 (lb) or less except when shown.

NOTES
1) Gable requires continuous bottom chord bearing.
2) This truss has been designed for a 10.0 psf bottom chord live load nonconcurrent with any other live loads.
3) * This truss has been designed for a live load of 20.0psf on the bottom chord in all areas where a rectangle 3-6-0 tall by 1-0-0 wide will fit between the bottom chord and any other members.

LOAD CASE(S) Standard

TOMAS PONCE
LICENSE
No. 50068
STATE OF
FLORIDA
PROFESSIONAL ENGINEER

FEB 2 4 2009

Job	Truss	Truss Type	Qty	Ply	BAYBURY_140_FLORIDA
BAYBURY	V2X	VALLEY	1	1	Job Reference (optional)

Maronda Homes Inc., Sanford, FL

7.110 s Dec 15 2008 MiTek Industries, Inc. Wed Feb 04 15:06:15 2009 Page 1

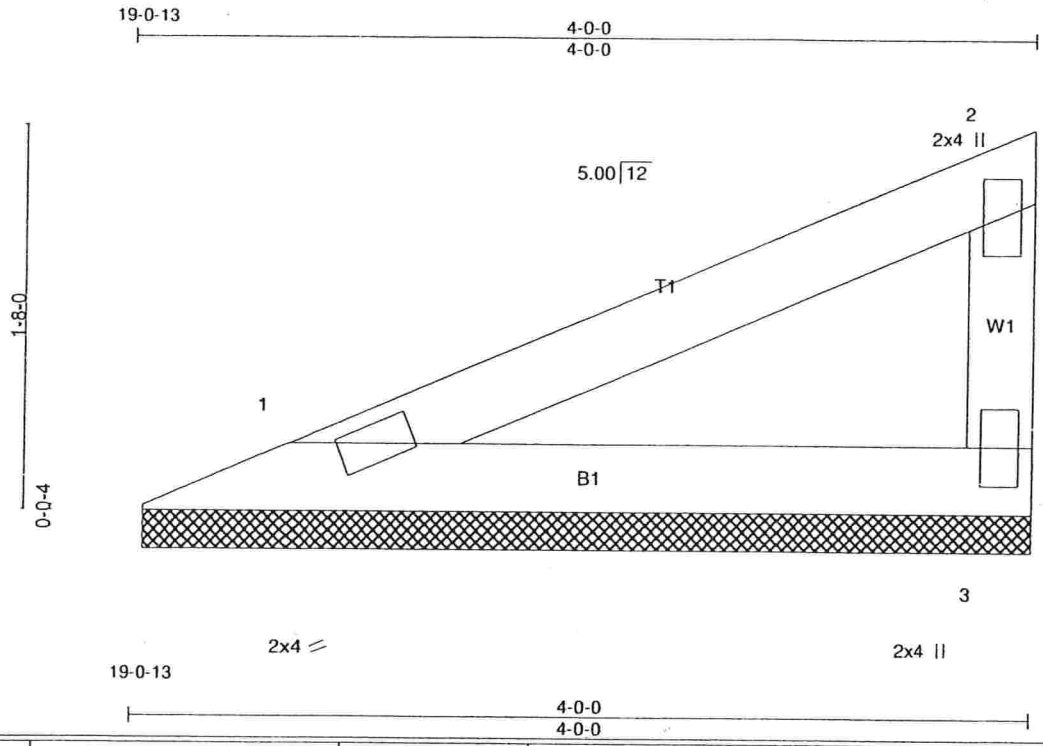

LOADING (psf)		SPACING	2-0-0	CSI		DEFL	in	(loc)	l/defl	L/d	PLATES	GRIP
TCLL	16.0	Plates Increase	1.25	TC	0.12	Vert(LL)	n/a	-	n/a	999	MT20	244/190
TCDL	7.0	Lumber Increase	1.25	BC	0.09	Vert(TL)	n/a	-	n/a	999		
BCLL	0.0 *	Rep Stress Incr	YES	WB	0.00	Horz(TL)	0.00		n/a	n/a		
BCDL	10.0	Code FRC2007/TPI2002		(Matrix)							Weight: 13 lb	

LUMBER
TOP CHORD 2 X 4 SYP No.2
BOT CHORD 2 X 4 SYP No.2
WEBS 2 X 4 SYP No.3

BRACING
TOP CHORD Structural wood sheathing directly applied or 4-0-0 oc purlins, except end verticals.
BOT CHORD Rigid ceiling directly applied or 10-0-0 oc bracing.

REACTIONS (lb/size) 1=103/0-1-8 (input: 3-11-6), 3=103/0-1-8 (input: 3-11-6)
Max Horz 1=68(LC 6)
Max Uplift1=-38(LC 6), 3=-67(LC 6)

FORCES (lb) - Max. Comp./Max. Ten. - All forces 250 (lb) or less except when shown.

NOTES
1) Wind: ASCE 7-05; 140mph (3-second gust); TCDL=4.2psf; BCDL=5.0psf; h=25ft; Cat. II; Exp B; enclosed; MWFRS (low-rise) and C-C Interior(1) zone;C-C for members and forces & MWFRS for reactions shown; Lumber DOL=1.60 plate grip DOL=1.60
2) Gable requires continuous bottom chord bearing.
3) This truss has been designed for a 10.0 psf bottom chord live load nonconcurrent with any other live loads.
4) * This truss has been designed for a live load of 20.0psf on the bottom chord in all areas where a rectangle 3-6-0 tall by 1-0-0 wide will fit between the bottom chord and any other members.
5) Provide mechanical connection (by others) of truss to bearing plate capable of withstanding 100 lb uplift at joint(s) 1, 3.

LOAD CASE(S) Standard

TOMAS PONCE
LICENSE
No. 50068
STATE OF
FLORIDA
PROFESSIONAL ENGINEER

FEB 2 4 2009

Job	Truss	Truss Type	Qty	Ply	BAYBURY_140_FLORIDA
BAYBURY	V3X	VALLEY	1	1	Job Reference (optional)

Maronda Homes Inc., Sanford, FL — 7.110 s Dec 15 2008 MiTek Industries, Inc. Wed Feb 04 15:06:16 2009 Page 1

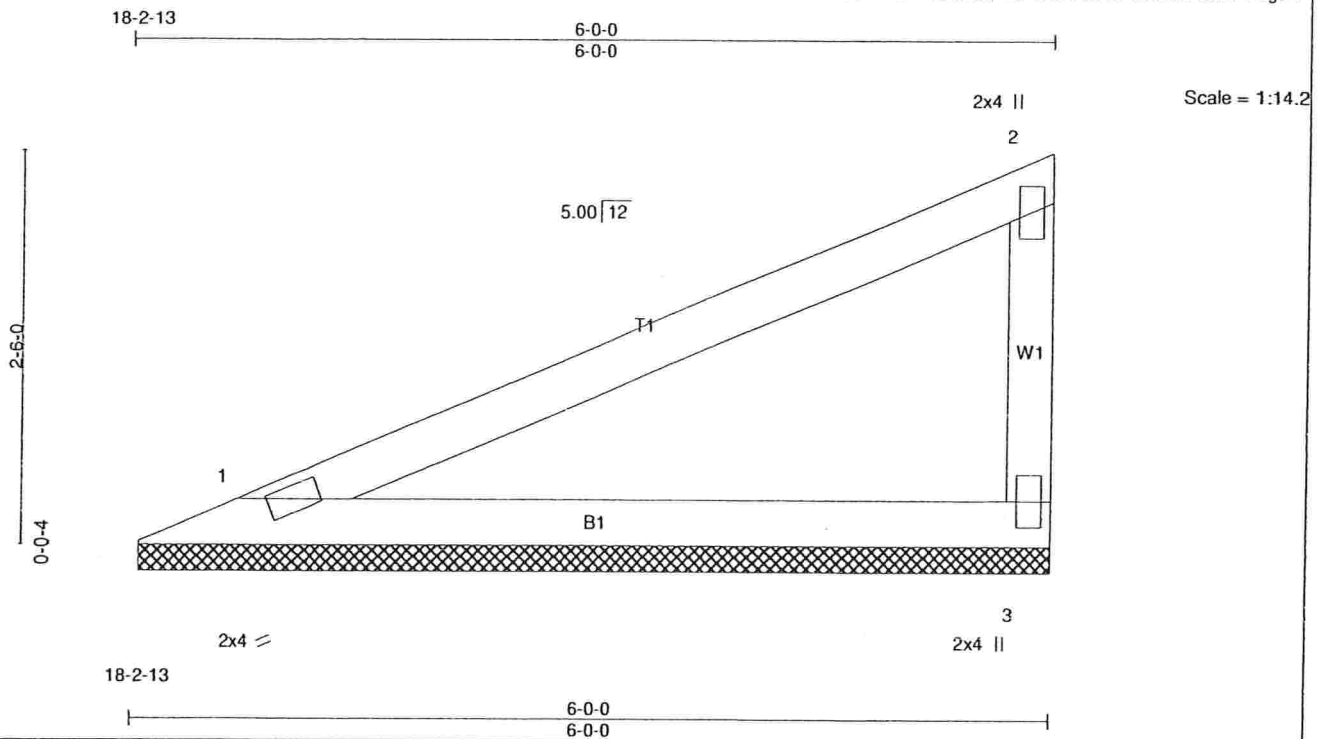

LOADING (psf)		SPACING 2-0-0		CSI		DEFL	in	(loc)	l/defl	L/d	PLATES	GRIP
TCLL	16.0	Plates Increase	1.25	TC	0.31	Vert(LL)	n/a	-	n/a	999	MT20	244/190
TCDL	7.0	Lumber Increase	1.25	BC	0.25	Vert(TL)	n/a	-	n/a	999		
BCLL	0.0 *	Rep Stress Incr	YES	WB	0.00	Horz(TL)	0.00		n/a	n/a		
BCDL	10.0	Code FRC2007/TPI2002		(Matrix)							Weight: 20 lb	

LUMBER
TOP CHORD 2 X 4 SYP No.2
BOT CHORD 2 X 4 SYP No.2
WEBS 2 X 4 SYP No.3

BRACING
TOP CHORD Structural wood sheathing directly applied or 6-0-0 oc purlins, except end verticals.
BOT CHORD Rigid ceiling directly applied or 10-0-0 oc bracing.

REACTIONS (lb/size) 1=169/0-1-8 (input: 5-11-6), 3=169/0-1-8 (input: 5-11-6)
Max Horz 1=111(LC 6)
Max Uplift1=-63(LC 6), 3=-109(LC 6)

FORCES (lb) - Max. Comp./Max. Ten. - All forces 250 (lb) or less except when shown.

NOTES
1) Wind: ASCE 7-05; 140mph (3-second gust); TCDL=4.2psf; BCDL=5.0psf; h=25ft; Cat. II; Exp B; enclosed; MWFRS (low-rise) and C-C Interior(1) zone;C-C for members and forces & MWFRS for reactions shown; Lumber DOL=1.60 plate grip DOL=1.60
2) Gable requires continuous bottom chord bearing.
3) This truss has been designed for a 10.0 psf bottom chord live load nonconcurrent with any other live loads.
4) * This truss has been designed for a live load of 20.0psf on the bottom chord in all areas where a rectangle 3-6-0 tall by 1-0-0 wide will fit between the bottom chord and any other members.
5) Provide mechanical connection (by others) of truss to bearing plate capable of withstanding 100 lb uplift at joint(s) 1 except (jt=lb) 3=109.

LOAD CASE(S) Standard

TOMAS PONCE
LICENSE
No. 50068
STATE OF
FLORIDA
PROFESSIONAL ENGINEER

FEB 2 4 2009

Job	Truss	Truss Type	Qty	Ply	BAYBURY_140_FLORIDA
BAYBURY	V4X	VALLEY	1	1	Job Reference (optional)

Maronda Homes Inc., Sanford, FL — 7.110 s Dec 15 2008 MiTek Industries, Inc. Wed Feb 04 15:06:16 2009 Page 1

21-11-14

0-10-8 | 1-9-0

0-10-8 | 0-10-8

Scale = 1:3.6

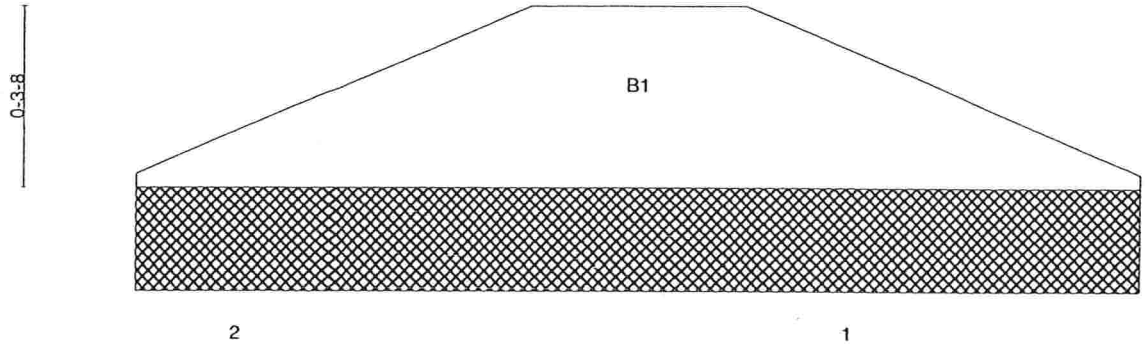

21-11-14

0-0-10 | 1-9-0

0-0-10 | 1-8-6

LOADING (psf)		SPACING	2-0-0	CSI		DEFL	in	(loc)	l/defl	L/d	PLATES	GRIP
TCLL	16.0	Plates Increase	0.90	TC	0.00	Vert(LL)	n/a	-	n/a	999		
TCDL	7.0	Plt. Metal Increase	0.90	BC	0.02	Vert(TL)	n/a	-	n/a	999		
BCLL	0.0 *	Lumber Increase	0.90	WB	0.00	Horz(TL)	0.00		n/a	n/a		
BCDL	10.0	Rep Stress Incr	YES	(Matrix)							Weight: 2 lb	
		Code FRC2007/TPI2002										

LUMBER
BOT CHORD 2 X 4 SYP No.3

BRACING
BOT CHORD Rigid ceiling directly applied or 10-0-0 oc bracing.

REACTIONS (lb/size) 2=10/0-1-8 (input: 1-7-12), 1=10/0-1-8 (input: 1-7-12)
Max Grav 2=20(LC 2), 1=20(LC 2)

FORCES (lb) - Max. Comp./Max. Ten. - All forces 250 (lb) or less except when shown.

NOTES
1) Gable requires continuous bottom chord bearing.
2) This truss has been designed for a 10.0 psf bottom chord live load nonconcurrent with any other live loads.
3) * This truss has been designed for a live load of 20.0psf on the bottom chord in all areas where a rectangle 3-6-0 tall by 1-0-0 wide will fit between the bottom chord and any other members.

LOAD CASE(S) Standard

TOMAS PONCE
LICENSE
No. 50068
STATE OF
FLORIDA
PROFESSIONAL ENGINEER

FEB 2 4 2009

Job	Truss	Truss Type	Qty	Ply	BAYBURY_140_FLORIDA
BAYBURY	V5X	VALLEY	2	1	Job Reference (optional)

Maronda Homes Inc., Sanford, FL

7.110 s Dec 15 2008 MiTek Industries, Inc. Wed Feb 04 15:06:17 2009 Page 1

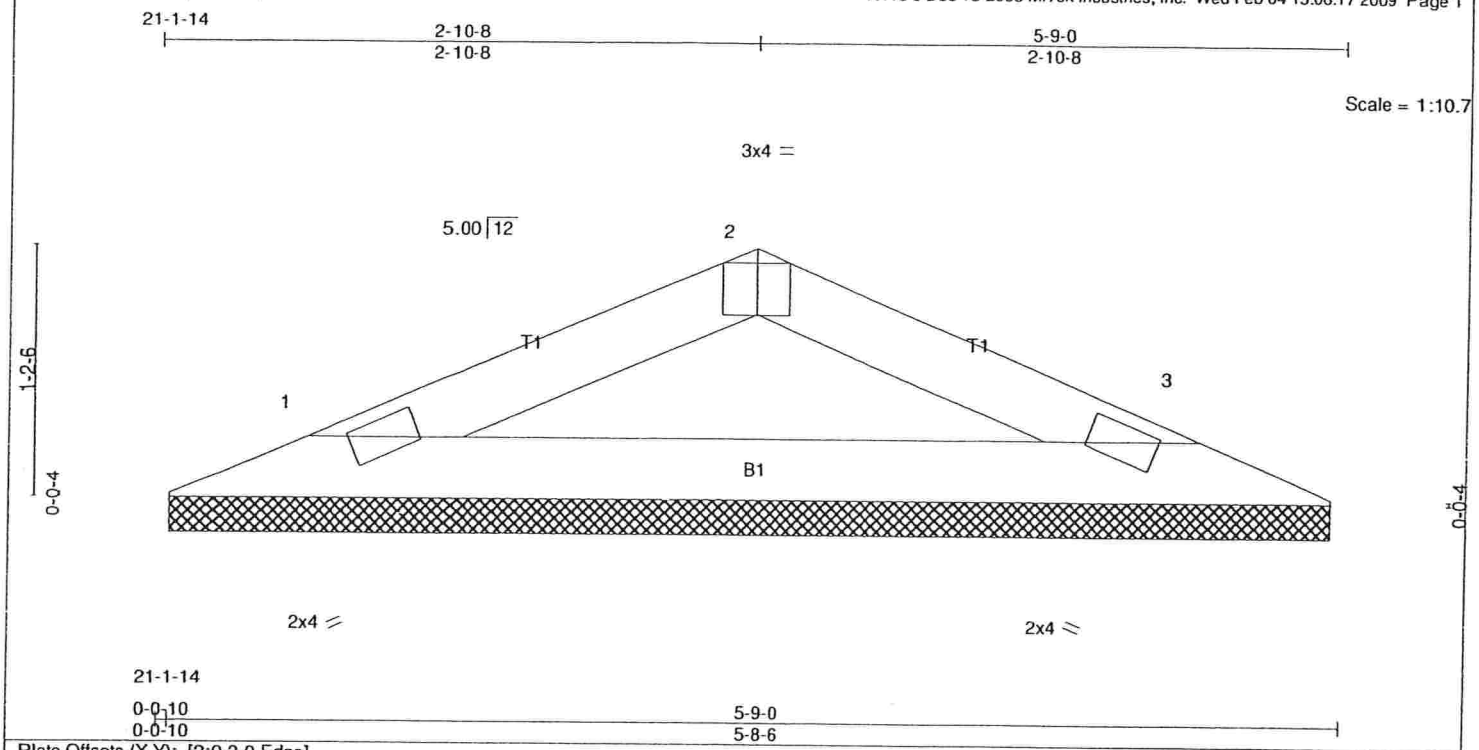

Plate Offsets (X,Y): [2:0-2-0,Edge]

LOADING (psf)		SPACING	2-0-0	CSI		DEFL	in	(loc)	l/defl	L/d	PLATES	GRIP
TCLL	16.0	Plates Increase	1.25	TC	0.08	Vert(LL)	n/a	-	n/a	999	MT20	244/190
TCDL	7.0	Lumber Increase	1.25	BC	0.18	Vert(TL)	n/a	-	n/a	999		
BCLL	0.0 *	Rep Stress Incr	YES	WB	0.00	Horz(TL)	-0.00	3	n/a	n/a		
BCDL	10.0	Code FRC2007/TPI2002		(Matrix)							Weight: 15 lb	

LUMBER
TOP CHORD 2 X 4 SYP No.2
BOT CHORD 2 X 4 SYP No.2

BRACING
TOP CHORD Structural wood sheathing directly applied or 5-9-0 oc purlins.
BOT CHORD Rigid ceiling directly applied or 10-0-0 oc bracing.

REACTIONS (lb/size) 1=142/0-1-8 (input: 5-7-12), 3=142/0-1-8 (input: 5-7-12)
Max Horz 1=17(LC 6)
Max Uplift1=-60(LC 6), 3=-60(LC 7)

FORCES (lb) - Max. Comp./Max. Ten. - All forces 250 (lb) or less except when shown.

NOTES
1) Unbalanced roof live loads have been considered for this design.
2) Wind: ASCE 7-05; 140mph (3-second gust); TCDL=4.2psf; BCDL=5.0psf; h=25ft; Cat. II; Exp B; enclosed; MWFRS (low-rise) and C-C Interior(1) zone;C-C for members and forces & MWFRS for reactions shown; Lumber DOL=1.60 plate grip DOL=1.60
3) Gable requires continuous bottom chord bearing.
4) This truss has been designed for a 10.0 psf bottom chord live load nonconcurrent with any other live loads.
5) * This truss has been designed for a live load of 20.0psf on the bottom chord in all areas where a rectangle 3-6-0 tall by 1-0-0 wide will fit between the bottom chord and any other members.
6) Provide mechanical connection (by others) of truss to bearing plate capable of withstanding 100 lb uplift at joint(s) 1, 3.

LOAD CASE(S) Standard

TOMAS PONCE
LICENSE
No. 50068
STATE OF
FLORIDA
PROFESSIONAL ENGINEER

FEB 2 4 2009

Job	Truss	Truss Type	Qty	Ply	BAYBURY_140_FLORIDA
BAYBURY	V6X	VALLEY	1	1	Job Reference (optional)

Maronda Homes Inc., Sanford, FL

7.110 s Dec 15 2008 MiTek Industries, Inc. Wed Feb 04 15:06:18 2009 Page 1

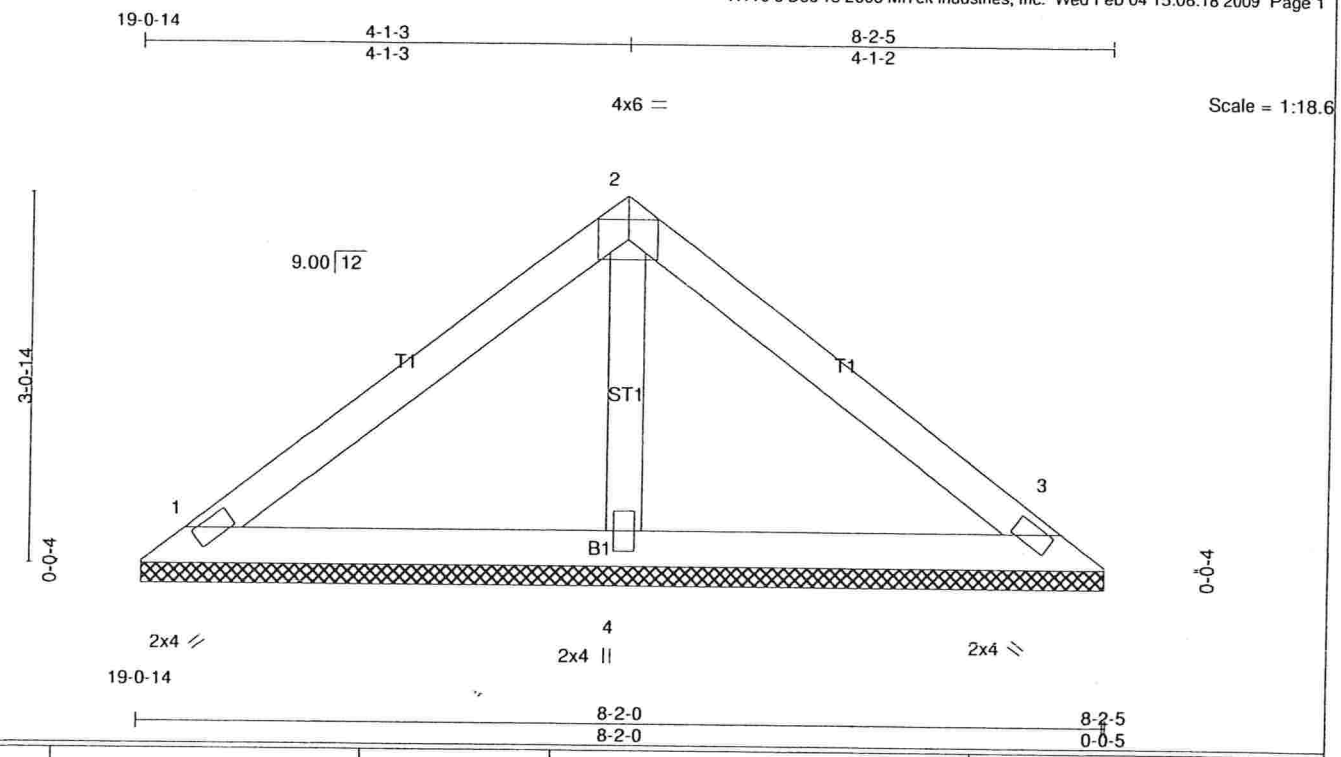

LOADING (psf)		SPACING	2-0-0	CSI		DEFL	in	(loc)	l/defl	L/d	PLATES	GRIP
TCLL	16.0	Plates Increase	1.25	TC	0.24	Vert(LL)	n/a	-	n/a	999	MT20	244/190
TCDL	7.0	Lumber Increase	1.25	BC	0.13	Vert(TL)	n/a	-	n/a	999		
BCLL	0.0 *	Rep Stress Incr	YES	WB	0.03	Horz(TL)	0.00	3	n/a	n/a		
BCDL	10.0	Code FRC2007/TPI2002		(Matrix)							Weight: 29 lb	

LUMBER
TOP CHORD 2 X 4 SYP No.2
BOT CHORD 2 X 4 SYP No.2
OTHERS 2 X 4 SYP No.3

BRACING
TOP CHORD Structural wood sheathing directly applied or 6-0-0 oc purlins.
BOT CHORD Rigid ceiling directly applied or 10-0-0 oc bracing.

REACTIONS (lb/size) 1=132/0-1-8 (input: 8-1-11), 3=132/0-1-8 (input: 8-1-11), 4=218/0-1-8 (input: 8-1-11)
Max Horz 1=123(LC 5)
Max Uplift1=-78(LC 6), 3=-88(LC 7), 4=-36(LC 6)
Max Grav 1=132(LC 1), 3=132(LC 1), 4=222(LC 2)

FORCES (lb) - Max. Comp./Max. Ten. - All forces 250 (lb) or less except when shown.

NOTES
1) Unbalanced roof live loads have been considered for this design.
2) Wind: ASCE 7-05; 140mph (3-second gust); TCDL=4.2psf; BCDL=5.0psf; h=25ft; Cat. II; Exp B; enclosed; MWFRS (low-rise) and C-C Interior(1) zone;C-C for members and forces & MWFRS for reactions shown; Lumber DOL=1.60 plate grip DOL=1.60
3) Gable requires continuous bottom chord bearing.
4) This truss has been designed for a 10.0 psf bottom chord live load nonconcurrent with any other live loads.
5) * This truss has been designed for a live load of 20.0psf on the bottom chord in all areas where a rectangle 3-6-0 tall by 1-0-0 wide will fit between the bottom chord and any other members.
6) Provide mechanical connection (by others) of truss to bearing plate capable of withstanding 100 lb uplift at joint(s) 1, 3, 4.

LOAD CASE(S) Standard

TOMAS PONCE
LICENSE
No. 50068
STATE OF
FLORIDA
PROFESSIONAL ENGINEER

FEB 2 4 2009

Job	Truss	Truss Type	Qty	Ply	BAYBURY_140_FLORIDA
BAYBURY	V7X	GABLE	1	1	Job Reference (optional)

Maronda Homes Inc., Sanford, FL

7.110 s Dec 15 2008 MiTek Industries, Inc. Wed Feb 04 15:06:19 2009 Page 1

19-10-14 | 2-11-13 (2-11-13) | 5-11-11 (2-11-14)

4x6 =

Scale = 1:14.1

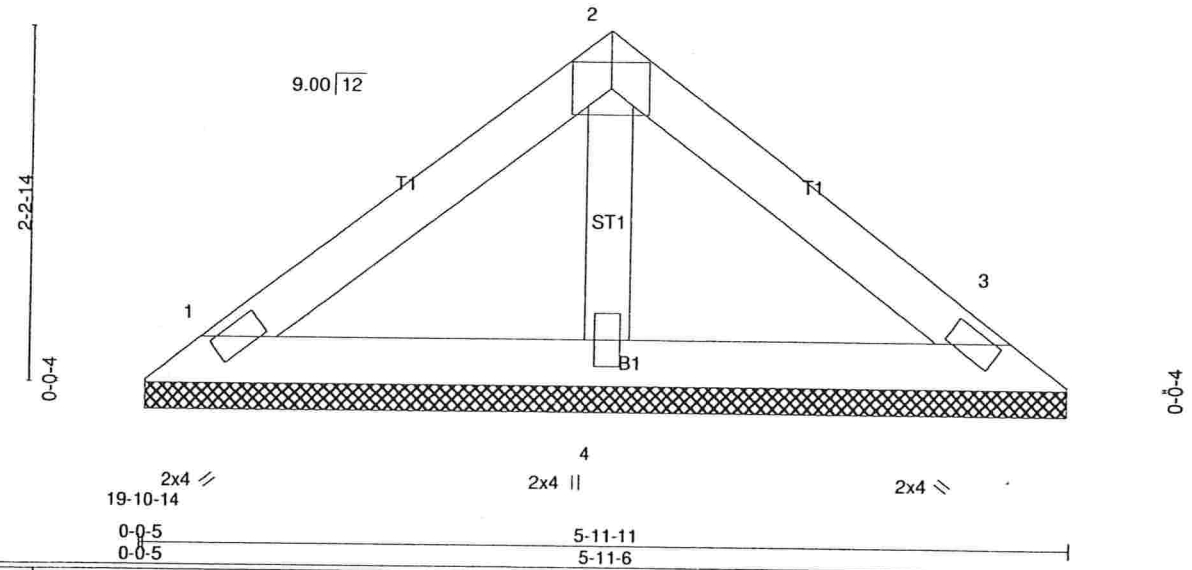

LOADING (psf)		SPACING	2-0-0	CSI		DEFL	in	(loc)	l/defl	L/d	PLATES	GRIP
TCLL	16.0	Plates Increase	1.25	TC	0.12	Vert(LL)	n/a	-	n/a	999	MT20	244/190
TCDL	7.0	Lumber Increase	1.25	BC	0.06	Vert(TL)	n/a	-	n/a	999		
BCLL	0.0 *	Rep Stress Incr	YES	WB	0.02	Horz(TL)	0.00	3	n/a	n/a		
BCDL	10.0	Code FRC2007/TPI2002		(Matrix)							Weight: 21 lb	

LUMBER
TOP CHORD 2 X 4 SYP No.2
BOT CHORD 2 X 4 SYP No.2
OTHERS 2 X 4 SYP No.3

BRACING
TOP CHORD Structural wood sheathing directly applied or 5-11-11 oc purlins.
BOT CHORD Rigid ceiling directly applied or 10-0-0 oc bracing.

REACTIONS (lb/size) 1=92/0-1-8 (input: 5-11-1), 3=92/0-1-8 (input: 5-11-1), 4=152/0-1-8 (input: 5-11-1)
Max Horz 1=-86(LC 4)
Max Uplift1=-54(LC 6), 3=-61(LC 7), 4=-25(LC 6)
Max Grav 1=92(LC 1), 3=92(LC 1), 4=154(LC 2)

FORCES (lb) - Max. Comp./Max. Ten. - All forces 250 (lb) or less except when shown.

NOTES
1) Unbalanced roof live loads have been considered for this design.
2) Wind: ASCE 7-05; 140mph (3-second gust); TCDL=4.2psf; BCDL=5.0psf; h=25ft; Cat. II; Exp B; enclosed; MWFRS (low-rise) and C-C Interior(1) zone;C-C for members and forces & MWFRS for reactions shown; Lumber DOL=1.60 plate grip DOL=1.60
3) Gable requires continuous bottom chord bearing.
4) This truss has been designed for a 10.0 psf bottom chord live load nonconcurrent with any other live loads.
5) * This truss has been designed for a live load of 20.0psf on the bottom chord in all areas where a rectangle 3-6-0 tall by 1-0-0 wide will fit between the bottom chord and any other members.
6) Provide mechanical connection (by others) of truss to bearing plate capable of withstanding 100 lb uplift at joint(s) 1, 3, 4.

LOAD CASE(S) Standard

TOMAS PONCE
LICENSE
No. 50068
STATE OF
FLORIDA
PROFESSIONAL ENGINEER

FEB 2 4 2009

Job	Truss	Truss Type	Qty	Ply	BAYBURY_140_FLORIDA
BAYBURY	V11X	VALLEY	1	1	Job Reference (optional)

Maronda Homes Inc., Sanford, FL

7.110 s Dec 15 2008 MiTek Industries, Inc. Wed Feb 04 15:06:22 2009 Page 1

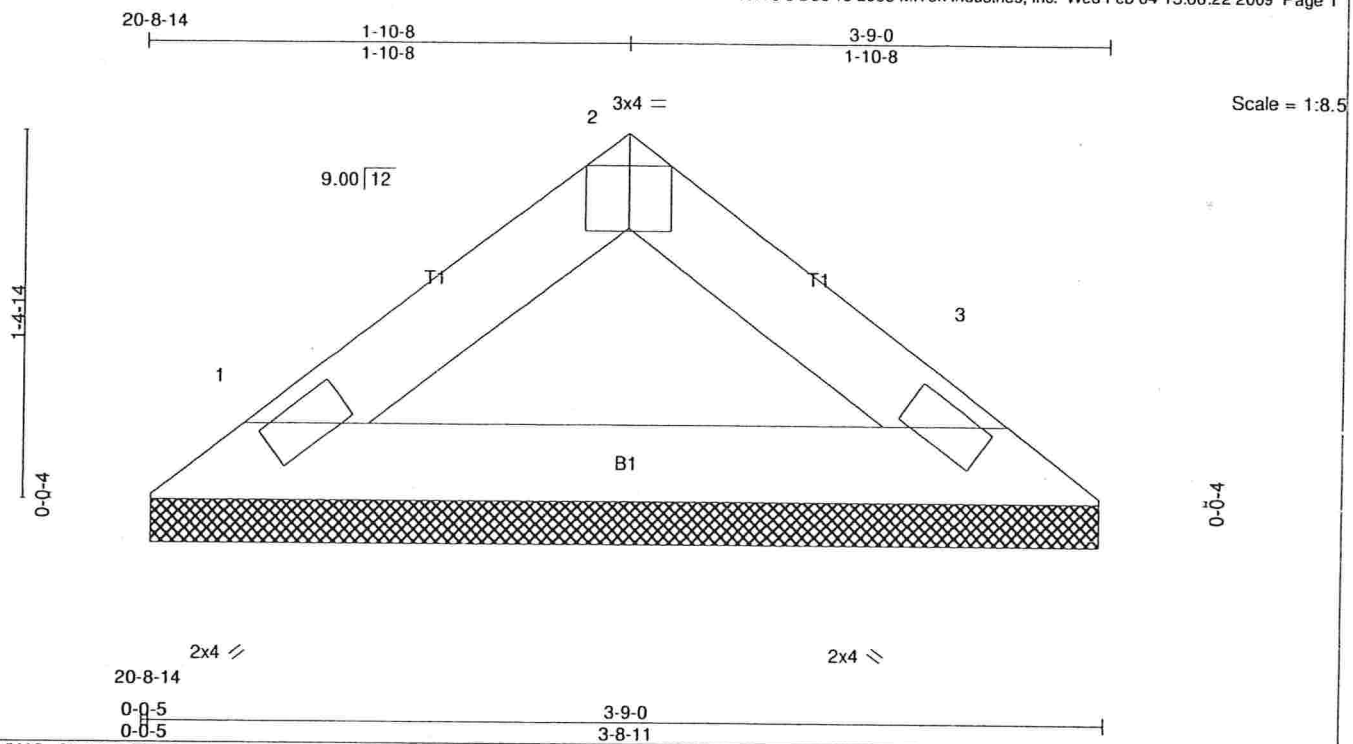

Plate Offsets (X,Y): [2:0-2-0,Edge]

LOADING (psf)		SPACING	2-0-0	CSI		DEFL	in	(loc)	l/defl	L/d	PLATES	GRIP
TCLL	16.0	Plates Increase	1.25	TC	0.08	Vert(LL)	n/a	-	n/a	999	MT20	244/190
TCDL	7.0	Lumber Increase	1.25	BC	0.14	Vert(TL)	n/a	-	n/a	999		
BCLL	0.0 *	Rep Stress Incr	YES	WB	0.00	Horz(TL)	0.00	3	n/a	n/a		
BCDL	10.0	Code FRC2007/TPI2002		(Matrix)							Weight: 11 lb	

LUMBER
TOP CHORD 2 X 4 SYP No.3
BOT CHORD 2 X 4 SYP No.3

BRACING
TOP CHORD Structural wood sheathing directly applied or 3-9-0 oc purlins.
BOT CHORD Rigid ceiling directly applied or 10-0-0 oc bracing.

REACTIONS (lb/size) 1=95/0-1-8 (input: 3-8-6), 3=95/0-1-8 (input: 3-8-6)
Max Horz 1=-49(LC 4)
Max Uplift1=-38(LC 6), 3=-38(LC 7)

FORCES (lb) - Max. Comp./Max. Ten. - All forces 250 (lb) or less except when shown.

NOTES
1) Unbalanced roof live loads have been considered for this design.
2) Wind: ASCE 7-05; 140mph (3-second gust); TCDL=4.2psf; BCDL=5.0psf; h=25ft; Cat. II; Exp B; enclosed; MWFRS (low-rise) and C-C Interior(1) zone;C-C for members and forces & MWFRS for reactions shown; Lumber DOL=1.60 plate grip DOL=1.60
3) Gable requires continuous bottom chord bearing.
4) This truss has been designed for a 10.0 psf bottom chord live load nonconcurrent with any other live loads.
5) * This truss has been designed for a live load of 20.0psf on the bottom chord in all areas where a rectangle 3-6-0 tall by 1-0-0 wide will fit between the bottom chord and any other members.
6) Provide mechanical connection (by others) of truss to bearing plate capable of withstanding 100 lb uplift at joint(s) 1, 3.

LOAD CASE(S) Standard

TOMAS PONCE
LICENSE
No. 50068
STATE OF
FLORIDA
PROFESSIONAL ENGINEER

FEB 2 4 2009

Job	Truss	Truss Type	Qty	Ply	BAYBURY_140_FLORIDA
BAYBURY	V12X	VALLEY	1	1	Job Reference (optional)

Maronda Homes Inc., Sanford, FL

7.110 s Dec 15 2008 MiTek Industries, Inc. Wed Feb 04 15:06:23 2009 Page 1

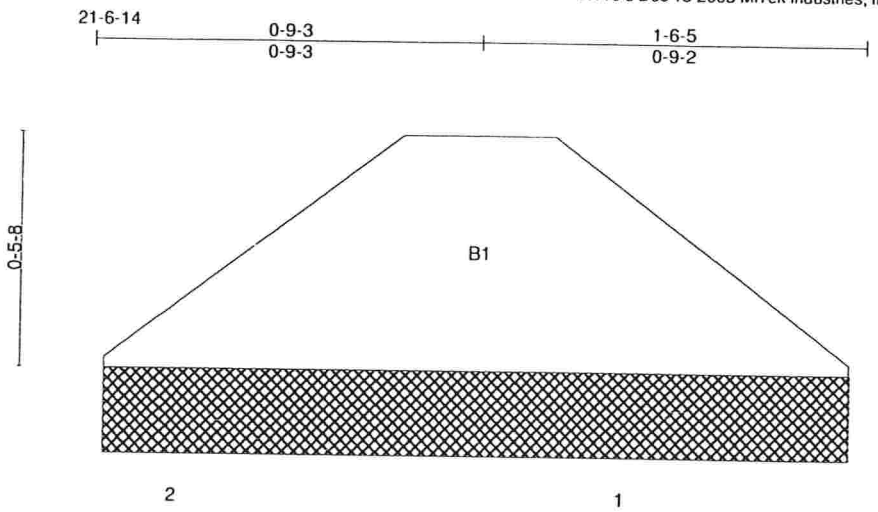

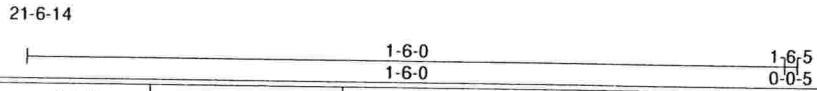

LOADING (psf)		SPACING 2-0-0		CSI		DEFL	in	(loc)	l/defl	L/d	PLATES	GRIP
TCLL	16.0	Plates Increase	0.90	TC	0.00	Vert(LL)	n/a	-	n/a	999		
TCDL	7.0	Plt. Metal Increase	0.90	BC	0.00	Vert(TL)	n/a	-	n/a	999		
BCLL	0.0 *	Lumber Increase	0.90	WB	0.00	Horz(TL)	0.00		n/a	n/a		
BCDL	10.0	Rep Stress Incr	YES	(Matrix)							Weight: 3 lb	
		Code FRC2007/TPI2002										

LUMBER
BOT CHORD 2 X 6 SYP No.2

BRACING
BOT CHORD Rigid ceiling directly applied or 10-0-0 oc bracing.

REACTIONS (lb/size) 2=9/0-1-8 (input: 1-5-11), 1=9/0-1-8 (input: 1-5-11)
Max Grav 2=18(LC 2), 1=18(LC 2)

FORCES (lb) - Max. Comp./Max. Ten. - All forces 250 (lb) or less except when shown.

NOTES
1) Gable requires continuous bottom chord bearing.
2) This truss has been designed for a 10.0 psf bottom chord live load nonconcurrent with any other live loads.
3) * This truss has been designed for a live load of 20.0psf on the bottom chord in all areas where a rectangle 3-6-0 tall by 1-0-0 wide will fit between the bottom chord and any other members.

LOAD CASE(S) Standard

TOMAS PONCE
LICENSE
No. 50068
STATE OF
FLORIDA
PROFESSIONAL ENGINEER

FEB 2 4 2009

Job	Truss	Truss Type	Qty	Ply	BAYBURY 2-3CAR _FL
ELEV_2_3CAR	FA	FLOOR	1	1	ELEV 2 & 3 CAR Job Reference (optional)

Maronda Homes Inc., Sanford, FL

7.110 s Dec 15 2008 MiTek Industries, Inc. Thu Feb 05 10:02:21 2009 Page 1

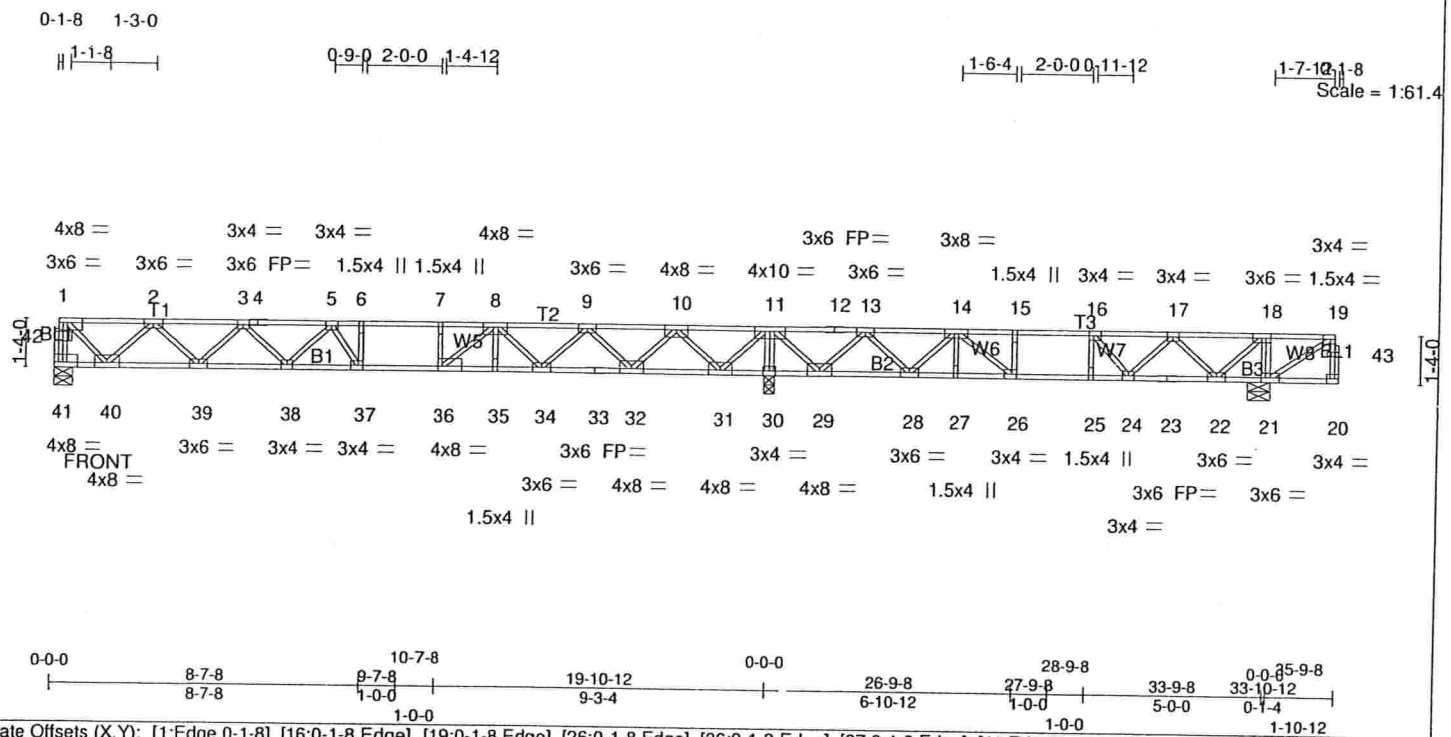

Plate Offsets (X,Y): [1:Edge,0-1-8], [16:0-1-8,Edge], [19:0-1-8,Edge], [26:0-1-8,Edge], [36:0-1-8,Edge], [37:0-1-8,Edge], [41:Edge,0-1-8], [42:0-1-8,0-1-8], [43:0-1-8,0-0-12]

LOADING (psf)		SPACING	2-0-0	CSI		DEFL	in	(loc)	l/defl	L/d	PLATES	GRIP
TCLL	40.0	Plates Increase	1.00	TC	0.88	Vert(LL)	-0.26	37	>908	480	MT20	244/190
TCDL	10.0	Lumber Increase	1.00	BC	0.92	Vert(TL)	-0.40	37-38	>592	360		
BCLL	0.0	Rep Stress Incr	NO	WB	0.67	Horz(TL)	0.05	30	n/a	n/a		
BCDL	5.0	Code FBC2007/TPI2002		(Matrix)							Weight: 189 lb	

LUMBER
TOP CHORD 4 X 2 SYP No.2
BOT CHORD 4 X 2 SYP No.2 *Except*
B1: 4 X 2 SYP No.1D
WEBS 4 X 2 SYP No.3

BRACING
TOP CHORD Structural wood sheathing directly applied or 6-0-0 oc purlins, except end verticals.
BOT CHORD Rigid ceiling directly applied or 6-0-0 oc bracing.

REACTIONS (lb/size) 41=1364/0-1-8 (input: 0-6-6), 30=2191/0-1-8 (input: 0-3-8), 21=1260/0-1-8 (input: 0-7-10)
Max Grav 41=1403(LC 4), 30=2241(LC 2), 21=1379(LC 3)

FORCES (lb) - Max. Comp./Max. Ten. - All forces 250 (lb) or less except when shown.
TOP CHORD 41-42=-1403/0, 1-42=-1386/0, 1-2=-1007/0, 2-3=-2396/0, 3-4=-3200/0, 4-5=-3200/0, 5-6=-3392/0, 6-7=-3392/0, 7-8=-3392/0, 8-9=-2409/0, 9-10=-1067/367, 10-11=0/1496, 11-12=0/1944, 12-13=0/1944, 13-14=-676/1308, 14-15=-1392/831, 15-16=-1392/831, 16-17=-1193/741, 17-18=-403/765, 18-19=0/825
BOT CHORD 39-40=0/1847, 38-39=0/2925, 37-38=0/3419, 36-37=0/3392, 35-36=0/2936, 34-35=0/2936, 33-34=-99/1874, 32-33=-99/1874, 31-32=-662/232, 30-31=-2752/0, 29-30=-2752/0, 28-29=-1532/225, 27-28=-1112/1124, 26-27=-1112/1124, 25-26=-831/1392, 24-25=-831/1392, 23-24=-720/932, 22-23=-720/932, 21-22=-825/0
WEBS 7-36=-362/0, 11-30=-2197/0, 15-26=-290/0, 18-21=-827/0, 2-40=-1168/0, 11-31=0/1672, 10-31=-1581/0, 10-32=0/1227, 2-39=0/763, 11-29=0/1251, 13-29=-1187/0, 18-22=0/856, 19-21=-988/0, 3-39=-736/0, 3-38=0/382, 5-38=-305/18, 5-37=-438/281, 9-32=-1188/0, 9-34=0/800, 8-34=-766/0, 13-28=0/799, 14-28=-755/0, 14-26=0/873, 17-22=-790/0, 17-24=-30/456, 16-24=-439/222, 8-36=0/974, 1-40=0/1200

TOMAS PONCE
LICENSE
No. 50068
STATE OF FLORIDA
PROFESSIONAL ENGINEER

NOTES
1) Unbalanced floor live loads have been considered for this design.
2) Recommend 2x6 strongbacks, on edge, spaced at 10-0-0 oc and fastened to each truss with 3-10d (0.131" X 3") nails. Strongbacks to be attached to walls at their outer ends or restrained by other means.
3) CAUTION, Do not erect truss backwards.
4) Hanger(s) or other connection device(s) shall be provided sufficient to support concentrated load(s) 462 lb down at 35-7-4, and 462 lb down at 0-3-0 on top chord. The design/selection of such connection device(s) is the responsibility of others.
5) In the LOAD CASE(S) section, loads applied to the face of the truss are noted as front (F) or back (B).

LOAD CASE(S) Standard
1) Floor: Lumber Increase=1.00, Plate Increase=1.00
Uniform Loads (plf)
Vert: 20-41=-10, 1-19=-100
Concentrated Loads (lb)
Vert: 19=-462(F) 1=-462(F)

FEB 2 4 2009

Job	Truss	Truss Type	Qty	Ply	BAYBURY 2-3CAR_FL
ELEV_2_3CAR	FB	FLOOR	1	1	ELEV BBR 2 & 3 CAR Job Reference (optional)

Maronda Homes Inc., Sanford, FL

7.110 s Dec 15 2008 MiTek Industries, Inc. Thu Feb 05 10:02:24 2009 Page 1

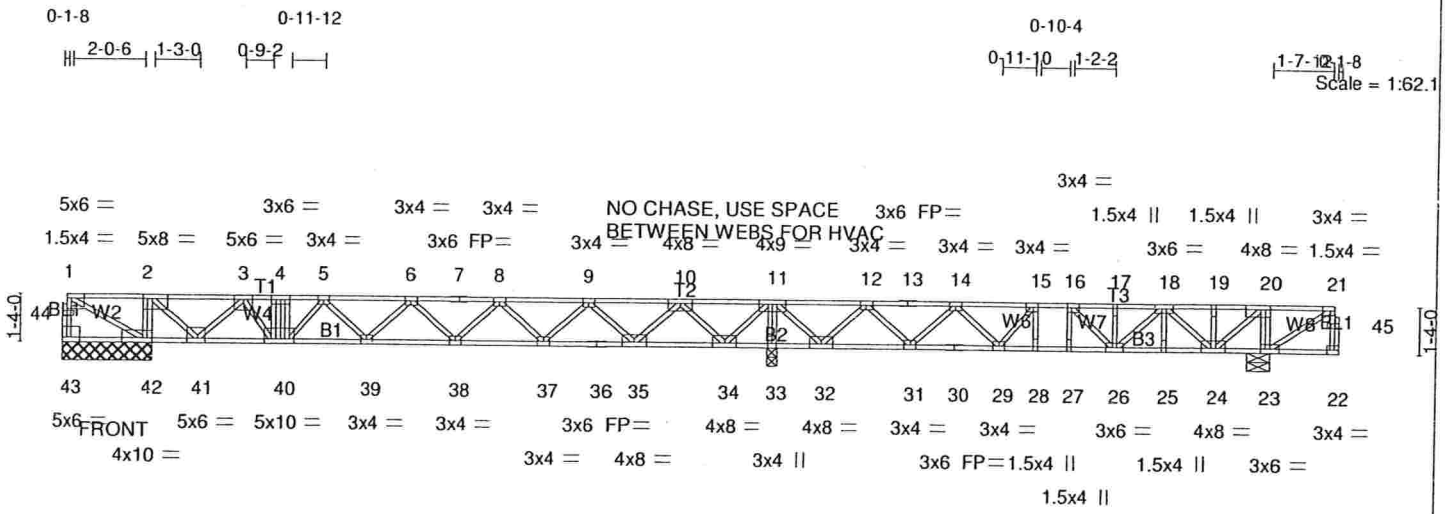

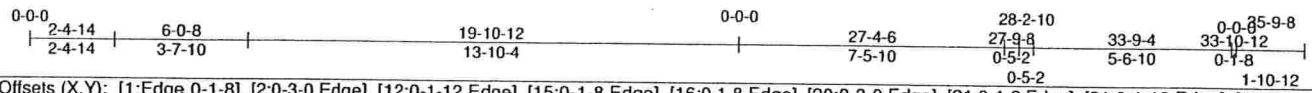

Plate Offsets (X,Y): [1:Edge,0-1-8], [2:0-3-0,Edge], [12:0-1-12,Edge], [15:0-1-8,Edge], [16:0-1-8,Edge], [20:0-3-0,Edge], [21:0-1-8,Edge], [31:0-1-12,Edge], [40:0-2-4,Edge], [41:0-2-8,Edge], [42:0-3-0,Edge], [43:Edge,0-1-8], [44:0-1-8,0-0-12], [45:0-1-8,0-0-12]

LOADING (psf)		SPACING	2-0-0	CSI		DEFL	in	(loc)	l/defl	L/d	PLATES	GRIP
TCLL	40.0	Plates Increase	1.00	TC	0.77	Vert(LL)	-0.13	38	>999	480	MT20	244/190
TCDL	10.0	Lumber Increase	1.00	BC	0.56	Vert(TL)	-0.19	38	>999	360		
BCLL	0.0	Rep Stress Incr	NO	WB	0.81	Horz(TL)	0.02	33	n/a	n/a		
BCDL	5.0	Code FBC2007/TPI2002		(Matrix)							Weight: 200 lb	

LUMBER
TOP CHORD 4 X 2 SYP No.2 *Except*
T1: 4 X 2 SYP No.1D
BOT CHORD 4 X 2 SYP No.2
WEBS 4 X 2 SYP No.3

BRACING
TOP CHORD Structural wood sheathing directly applied or 6-0-0 oc purlins, except end verticals.
BOT CHORD Rigid ceiling directly applied or 6-0-0 oc bracing, Except: 10-0-0 oc bracing: 40-41,39-40,38-39,37-38.

REACTIONS All bearings 2-6-6 except (jt=length) 23=0-7-10, 33=0-3-8.
(lb) - Max Uplift All uplift 100 lb or less at joint(s) except 43=-1207(LC 6)
Max Grav All reactions 250 lb or less at joint(s) except 43=345(LC 5), 23=1386(LC 4), 42=2973(LC 2), 33=2071(LC 3)

FORCES (lb) - Max. Comp./Max. Ten. - All forces 250 (lb) or less except when shown.
TOP CHORD 43-44=-338/1209, 1-44=-337/1207, 1-2=0/2503, 2-3=0/995, 3-4=-1328/0, 4-5=-1326/0, 5-6=-2015/0, 6-7=-2200/0, 7-8=-2200/0, 8-9=-1812/5, 9-10=-864/443, 10-11=0/1432, 11-12=0/1586, 12-13=-652/999, 13-14=-652/999, 14-15=-1273/729, 15-16=-1400/642, 16-17=-1259/604, 17-18=-1259/604, 18-19=-466/724, 19-20=-466/724, 20-21=0/821
BOT CHORD 41-42=-2503/0, 40-41=0/477, 39-40=0/1765, 38-39=0/2240, 37-38=0/2135, 36-37=-196/1465, 35-36=-196/1465, 34-35=-718/235, 33-34=-2508/0, 32-33=-2508/0, 31-32=-1189/187, 30-31=-839/1089, 29-30=-839/1089, 28-29=-642/1400, 27-28=-642/1400, 26-27=-642/1400, 25-26=-638/952, 24-25=-638/952, 23-24=-821/0
WEBS 2-41=0/2008, 3-41=-1910/0, 3-40=0/1430, 11-34=0/1433, 10-34=-1354/0, 10-35=0/992, 9-35=-952/0, 9-37=0/593, 8-37=-559/0, 6-39=-313/50, 5-39=-15/349, 5-40=-662/0, 11-32=0/1228, 12-32=-1161/0, 12-31=0/795, 14-31=-750/0, 14-29=0/466, 15-29=-496/0, 20-24=0/949, 18-24=-752/0, 18-26=-36/491, 16-26=-329/284, 21-23=-983/0, 2-42=-1602/0, 11-33=-2031/0, 20-23=-818/0, 4-40=-616/0, 1-42=-2780/0

NOTES
1) Unbalanced floor live loads have been considered for this design.
2) Provide mechanical connection (by others) of truss to bearing plate capable of withstanding 1207 lb uplift at joint 43.
3) Uplift for first LC exceeds limits
4) Recommend 2x6 strongbacks, on edge, spaced at 10-0-0 oc and fastened to each truss with 3-10d (0.131" X 3") nails. Strongbacks to be attached to walls at their outer ends or restrained by other means.
5) CAUTION, Do not erect truss backwards.
6) Hanger(s) or other connection device(s) shall be provided sufficient to support concentrated load(s) 462 lb down at 0-2-4, and 462 lb down at 35-7-4, and 590 lb down at 6-0-8 on top chord. The design/selection of such connection device(s) is the responsibility of others.
7) In the LOAD CASE(S) section, loads applied to the face of the truss are noted as front (F) or back (B).

LOAD CASE(S) Standard
1) Floor: Lumber Increase=1.00, Plate Increase=1.00

TOMAS PONCE LICENSE No. 50068 STATE OF FLORIDA PROFESSIONAL ENGINEER

FEB 2 4 2009

Continued on page 2

LOAD CASE(S) Standard

Uniform Loads (plf)

Vert: 22-43=-10, 1-21=-100

Concentrated Loads (lb)

Vert: 1=-462(F) 21=-462(F) 4=-590(F)

TOMAS PONCE
LICENSE
No. 50068
STATE OF
FLORIDA
PROFESSIONAL ENGINEER

FEB 2 4 2009

Job	Truss	Truss Type	Qty	Ply	BAYBURY 2-3CAR _FL
ELEV_2_3CAR	FC	FLOOR	9	1	ELEV BBR 2 & 3 CAR Job Reference (optional)

Maronda Homes Inc., Sanford, FL

7.110 s Dec 15 2008 MiTek Industries, Inc. Thu Feb 05 10:02:27 2009 Page 1

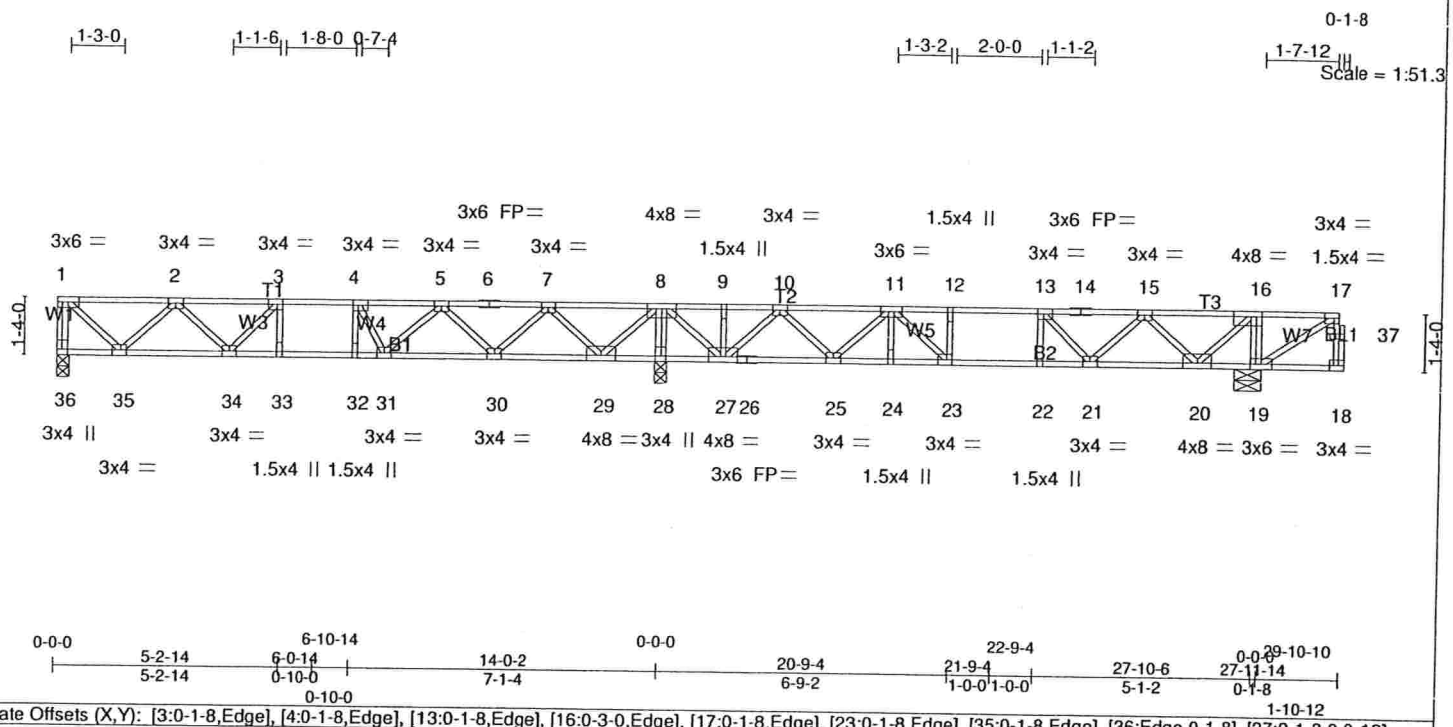

Plate Offsets (X,Y): [3:0-1-8,Edge], [4:0-1-8,Edge], [13:0-1-8,Edge], [16:0-3-0,Edge], [17:0-1-8,Edge], [23:0-1-8,Edge], [35:0-1-8,Edge], [36:Edge,0-1-8], [37:0-1-8,0-0-12]

LOADING (psf)		SPACING	2-0-0	CSI		DEFL	in	(loc)	l/defl	L/d	PLATES	GRIP
TCLL	40.0	Plates Increase	1.00	TC	0.54	Vert(LL)	-0.08	21-22	>999	480	MT20	244/190
TCDL	10.0	Lumber Increase	1.00	BC	0.70	Vert(TL)	-0.10	32-33	>999	360		
BCLL	0.0	Rep Stress Incr	NO	WB	0.48	Horz(TL)	0.02	19	n/a	n/a		
BCDL	5.0	Code FBC2007/TPI2002		(Matrix)							Weight: 160 lb	

LUMBER
TOP CHORD 4 X 2 SYP No.2
BOT CHORD 4 X 2 SYP No.2
WEBS 4 X 2 SYP No.3

BRACING
TOP CHORD Structural wood sheathing directly applied or 6-0-0 oc purlins, except end verticals.
BOT CHORD Rigid ceiling directly applied or 6-0-0 oc bracing, Except: 10-0-0 oc bracing: 35-36,34-35,33-34,32-33,31-32.

REACTIONS (lb/size) 36=607/0-1-8 (input: 0-3-8), 19=1344/0-1-8 (input: 0-7-10), 28=1764/0-1-8 (input: 0-3-8)
Max Grav 36=664(LC 4), 19=1399(LC 3), 28=1814(LC 2)

FORCES (lb) - Max. Comp./Max. Ten. - All forces 250 (lb) or less except when shown.
TOP CHORD 1-36=-658/0, 1-2=-630/0, 2-3=-1425/0, 3-4=-1639/0, 4-5=-1545/27, 5-6=-917/359, 6-7=-917/359, 7-8=0/909, 8-9=0/1021, 9-10=0/1021, 10-11=-885/574, 11-12=-1492/401, 12-13=-1492/401, 13-14=-1254/457, 14-15=-1254/457, 15-16=-427/667, 16-17=0/823
BOT CHORD 34-35=0/1179, 33-34=0/1639, 32-33=0/1639, 31-32=0/1639, 30-31=-179/1346, 29-30=-571/459, 28-29=-1795/0, 27-28=-1795/0, 26-27=-703/461, 25-26=-703/461, 24-25=-465/1303, 23-24=-465/1303, 22-23=-401/1492, 21-22=-401/1492, 20-21=-541/977, 19-20=-823/0
WEBS 8-27=0/1191, 10-27=-1032/0, 1-35=0/838, 2-35=-765/0, 2-34=-12/342, 3-34=-306/97, 10-25=0/665, 11-25=-632/0, 11-23=0/609, 8-29=0/1178, 7-29=-1109/0, 7-30=0/724, 5-30=-680/0, 5-31=0/449, 4-31=-512/0, 16-20=0/888, 15-20=-819/0, 15-21=0/477, 13-21=-478/0, 17-19=-985/0, 8-28=-1777/0, 16-19=-847/0, 4-32=-48/253

NOTES
1) Unbalanced floor live loads have been considered for this design.
2) Recommend 2x6 strongbacks, on edge, spaced at 10-0-0 oc and fastened to each truss with 3-10d (0.131" X 3") nails. Strongbacks to be attached to walls at their outer ends or restrained by other means.
3) CAUTION, Do not erect truss backwards.
4) Hanger(s) or other connection device(s) shall be provided sufficient to support concentrated load(s) 462 lb down at 29-8-6 on top chord. The design/selection of such connection device(s) is the responsibility of others.
5) In the LOAD CASE(S) section, loads applied to the face of the truss are noted as front (F) or back (B).

LOAD CASE(S) Standard
1) Floor: Lumber Increase=1.00, Plate Increase=1.00
Uniform Loads (plf)
Vert: 18-36=-10, 1-17=-100
Concentrated Loads (lb)
Vert: 17=-462(F)

TOMAS PONCE
LICENSE
No. 50068
STATE OF FLORIDA
PROFESSIONAL ENGINEER

FEB 2 4 2009

Job	Truss	Truss Type	Qty	Ply	BAYBURY 2-3CAR _FL
ELEV_2_3CAR	FC-A	FLOOR	1	1	ELEV BBR 2 & 3 CAR Job Reference (optional)

Maronda Homes Inc., Sanford, FL

7.110 s Dec 15 2008 MiTek Industries, Inc. Thu Feb 05 10:02:30 2009 Page 1

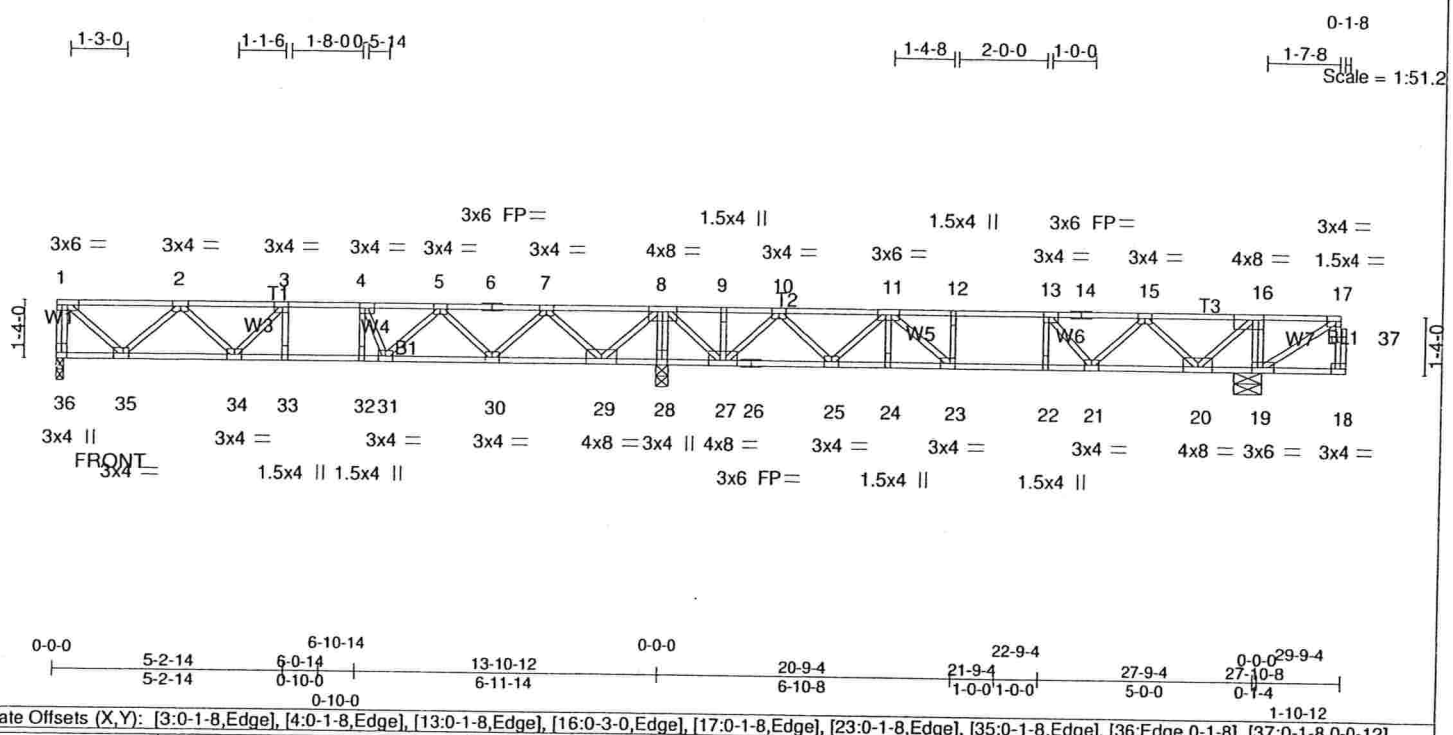

Plate Offsets (X,Y): [3:0-1-8,Edge], [4:0-1-8,Edge], [13:0-1-8,Edge], [16:0-3-0,Edge], [17:0-1-8,Edge], [23:0-1-8,Edge], [35:0-1-8,Edge], [36:Edge,0-1-8], [37:0-1-8,0-0-12]

LOADING (psf)		SPACING	2-0-0	CSI		DEFL	in	(loc)	l/defl	L/d	PLATES	GRIP
TCLL	40.0	Plates Increase	1.00	TC	0.54	Vert(LL)	-0.08	23-24	>999	480	MT20	244/190
TCDL	10.0	Lumber Increase	1.00	BC	0.73	Vert(TL)	-0.10	23-24	>999	360		
BCLL	0.0	Rep Stress Incr	NO	WB	0.48	Horz(TL)	0.02	19	n/a	n/a		
BCDL	5.0	Code FBC2007/TPI2002		(Matrix)							Weight: 159 lb	

LUMBER
TOP CHORD 4 X 2 SYP No.2
BOT CHORD 4 X 2 SYP No.2
WEBS 4 X 2 SYP No.3

BRACING
TOP CHORD Structural wood sheathing directly applied or 6-0-0 oc purlins, except end verticals.
BOT CHORD Rigid ceiling directly applied or 6-0-0 oc bracing, Except: 10-0-0 oc bracing: 35-36,34-35,33-34,32-33,31-32.

REACTIONS (lb/size) 36=599/0-1-8 (input: 0-2-2), 19=1342/0-1-8 (input: 0-7-10), 28=1762/0-1-8 (input: 0-3-8)
Max Grav 36=658(LC 4), 19=1395(LC 3), 28=1811(LC 2)

FORCES (lb) - Max. Comp./Max. Ten. - All forces 250 (lb) or less except when shown.
TOP CHORD 1-36=-653/0, 1-2=-623/0, 2-3=-1408/0, 3-4=-1612/0, 4-5=-1531/43, 5-6=-912/382, 6-7=-912/382, 7-8=0/922, 8-9=0/1017, 9-10=0/1017, 10-11=-870/556, 11-12=-1486/385, 12-13=-1486/385, 13-14=-1256/441, 14-15=-1256/441, 15-16=-428/654, 16-17=0/811
BOT CHORD 34-35=0/1168, 33-34=0/1612, 32-33=0/1612, 31-32=0/1612, 30-31=-201/1333, 29-30=-596/463, 28-29=-1797/0, 27-28=-1797/0, 26-27=-685/441, 25-26=-685/441, 24-25=-446/1294, 23-24=-446/1294, 22-23=-385/1486, 21-22=-385/1486, 20-21=-528/974, 19-20=-811/0
WEBS 1-35=0/830, 2-35=-758/0, 8-29=0/1172, 7-29=-1103/0, 7-30=0/716, 16-20=0/883, 17-19=-975/0, 2-34=-20/333, 3-34=-293/108, 5-30=-672/0, 5-31=0/462, 4-31=-543/0, 8-27=0/1195, 15-20=-814/0, 15-21=0/484, 13-21=-480/0, 10-27=-1034/0, 10-25=0/669, 11-25=-639/0, 11-23=0/595, 4-32=-41/294, 8-28=-1774/0, 16-19=-845/0

NOTES
1) Unbalanced floor live loads have been considered for this design.
2) Provide mechanical connection (by others) of truss to bearing plate at joint(s) 36.
3) Recommend 2x6 strongbacks, on edge, spaced at 10-0-0 oc and fastened to each truss with 3-10d (0.131" X 3") nails. Strongbacks to be attached to walls at their outer ends or restrained by other means.
4) CAUTION, Do not erect truss backwards.
5) Hanger(s) or other connection device(s) shall be provided sufficient to support concentrated load(s) 462 lb down at 29-7-0 on top chord. The design/selection of such connection device(s) is the responsibility of others.
6) In the LOAD CASE(S) section, loads applied to the face of the truss are noted as front (F) or back (B).

LOAD CASE(S) Standard
1) Floor: Lumber Increase=1.00, Plate Increase=1.00
Uniform Loads (plf)
Vert: 18-36=-10, 1-17=-100
Concentrated Loads (lb)
Vert: 17=-462(F)

TOMAS PONCE
LICENSE
No. 50068
STATE OF
FLORIDA
PROFESSIONAL ENGINEER

FEB 2 4 2009

Job	Truss	Truss Type	Qty	Ply	BAYBURY 2-3CAR _FL
ELEV_2_3CAR	FD	FLOOR	9	1	ELEV BBR 2 & 3 CAR Job Reference (optional)

Maronda Homes Inc., Sanford, FL

7.110 s Dec 15 2008 MiTek Industries, Inc. Thu Feb 05 10:02:32 2009 Page 1

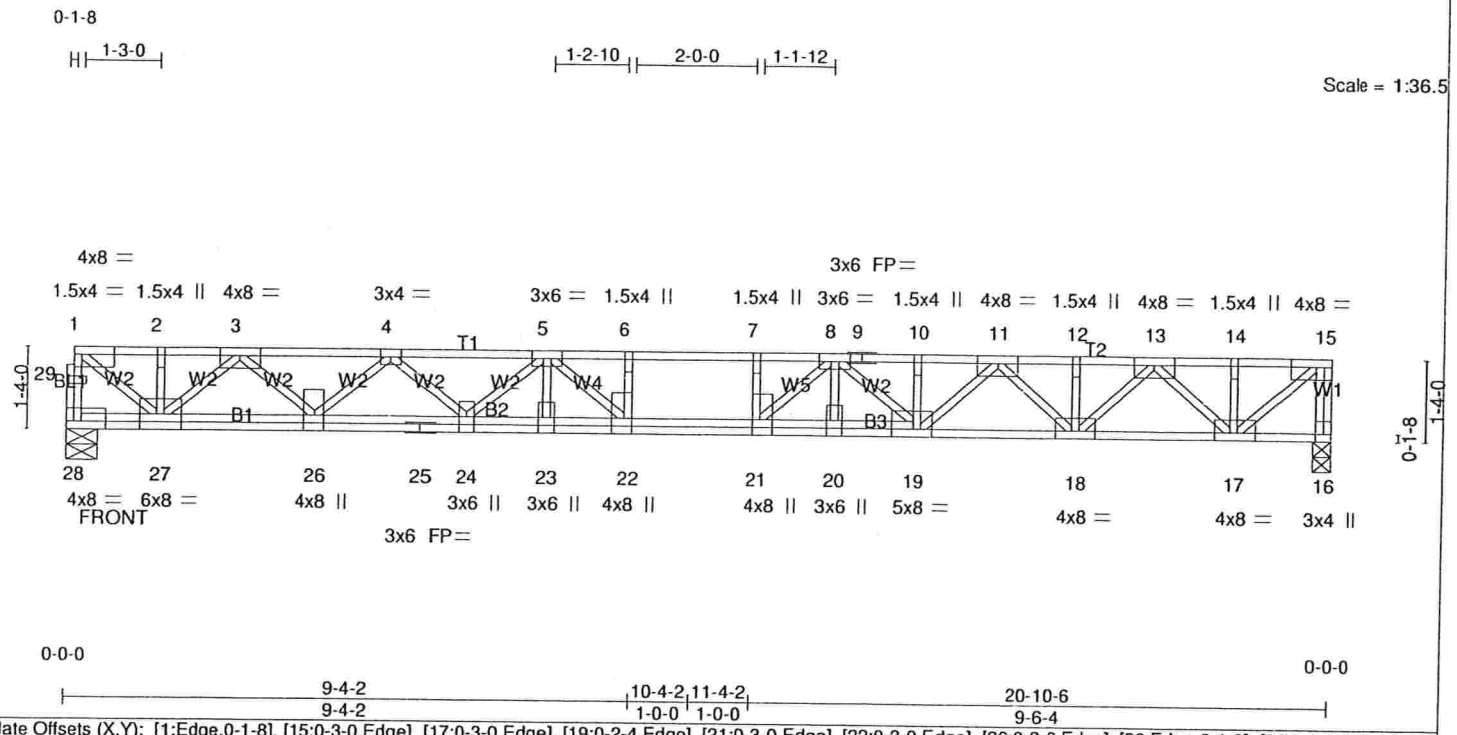

Plate Offsets (X,Y): [1:Edge,0-1-8], [15:0-3-0,Edge], [17:0-3-0,Edge], [19:0-2-4,Edge], [21:0-3-0,Edge], [22:0-3-0,Edge], [26:0-3-0,Edge], [28:Edge,0-1-8], [29:0-1-8,0-0-12]

LOADING (psf)		SPACING	2-0-0	CSI		DEFL	in	(loc)	l/defl	L/d	PLATES	GRIP
TCLL	40.0	Plates Increase	1.00	TC	0.61	Vert(LL)	-0.35	21-22	>713	480	MT20	244/190
TCDL	10.0	Lumber Increase	1.00	BC	0.97	Vert(TL)	-0.54	21-22	>456	360		
BCLL	0.0	Rep Stress Incr	NO	WB	0.66	Horz(TL)	0.07	16	n/a	n/a		
BCDL	5.0	Code FBC2007/TPI2002		(Matrix)							Weight: 134 lb	

LUMBER
TOP CHORD 4 X 2 SYP No.2
BOT CHORD 4 X 2 SYP No.2
WEBS 4 X 2 SYP No.3

BRACING
TOP CHORD Structural wood sheathing directly applied or 5-5-11 oc purlins, except end verticals.
BOT CHORD Rigid ceiling directly applied or 10-0-0 oc bracing.

REACTIONS (lb/size) 28=1588/0-1-8 (input: 0-6-6), 16=1135/0-1-8 (input: 0-3-8)

FORCES (lb) - Max. Comp./Max. Ten. - All forces 250 (lb) or less except when shown.
TOP CHORD 28-29=-1580/0, 1-29=-1578/0, 15-16=-1128/0, 1-2=-1350/0, 2-3=-1350/0, 3-4=-3176/0, 4-5=-4372/0, 5-6=-5057/0, 6-7=-5057/0, 7-8=-5057/0, 8-9=-4489/0, 9-10=-4489/0, 10-11=-4496/0, 11-12=-3072/0, 12-13=-3072/0, 13-14=-1269/0, 14-15=-1269/0
BOT CHORD 26-27=0/2397, 25-26=0/3922, 24-25=0/3922, 23-24=0/4834, 22-23=0/4834, 21-22=0/5057, 20-21=0/4869, 19-20=0/4869, 18-19=0/3827, 17-18=0/2239
WEBS 1-27=0/1646, 15-17=0/1658, 3-27=-1389/0, 3-26=0/1057, 4-26=-1012/0, 4-24=0/610, 5-24=-613/0, 13-17=-1319/0, 13-18=0/1132, 11-18=-1024/0, 11-19=0/873, 5-22=-210/744, 8-19=-504/0, 8-21=-236/711

NOTES
1) Unbalanced floor live loads have been considered for this design.
2) Recommend 2x6 strongbacks, on edge, spaced at 10-0-0 oc and fastened to each truss with 3-10d (0.131" X 3") nails. Strongbacks to be attached to walls at their outer ends or restrained by other means.
3) CAUTION, Do not erect truss backwards.
4) Hanger(s) or other connection device(s) shall be provided sufficient to support concentrated load(s) 462 lb down at 0-2-4 on top chord. The design/selection of such connection device(s) is the responsibility of others.
5) In the LOAD CASE(S) section, loads applied to the face of the truss are noted as front (F) or back (B).

LOAD CASE(S) Standard
1) Floor: Lumber Increase=1.00, Plate Increase=1.00
Uniform Loads (plf)
Vert: 16-28=-10, 1-15=-100
Concentrated Loads (lb)
Vert: 1=-462(F)

TOMAS PONCE
LICENSE
No. 50068
STATE OF
FLORIDA
PROFESSIONAL ENGINEER

FEB 2 4 2009

Job	Truss	Truss Type	Qty	Ply	BAYBURY 2-3CAR _FL
ELEV_2_3CAR	FE	FLOOR	3	1	ELEV BBR 2 & 3 CAR Job Reference (optional)

Maronda Homes Inc., Sanford, FL

7.110 s Dec 15 2008 MiTek Industries, Inc. Thu Feb 05 10:02:34 2009 Page 1

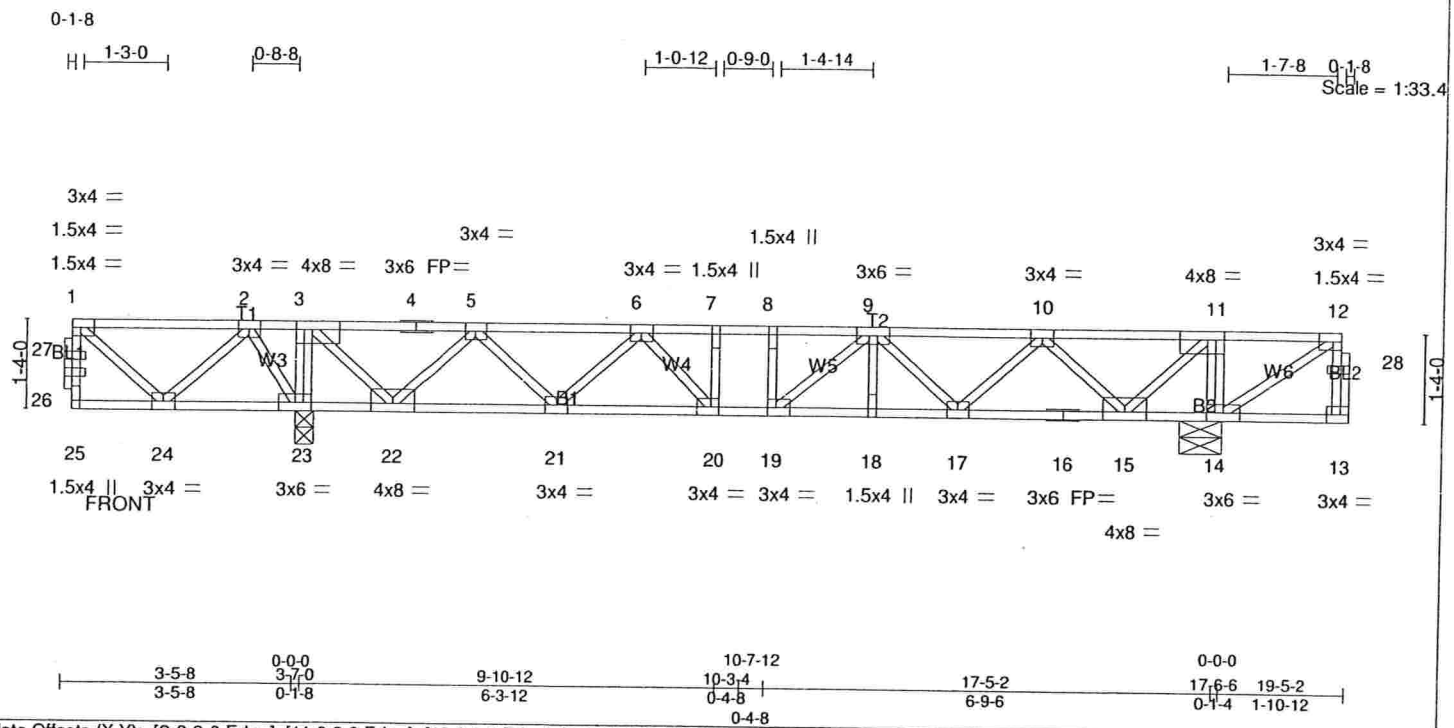

Plate Offsets (X,Y): [3:0-3-0,Edge], [11:0-3-0,Edge], [12:0-1-8,Edge], [19:0-1-8,Edge], [20:0-1-8,Edge], [26:0-1-8,0-0-12], [27:0-1-8,0-0-12], [28:0-1-8,0-0-12]

LOADING (psf)		SPACING	2-0-0	CSI		DEFL	in	(loc)	l/defl	L/d	PLATES	GRIP
TCLL	40.0	Plates Increase	1.00	TC	0.49	Vert(LL)	-0.09	19	>999	480	MT20	244/190
TCDL	10.0	Lumber Increase	1.00	BC	0.51	Vert(TL)	-0.12	19	>999	360		
BCLL	0.0	Rep Stress Incr	NO	WB	0.41	Horz(TL)	0.03	14	n/a	n/a		
BCDL	5.0	Code FBC2007/TPI2002		(Matrix)							Weight: 109 lb	

LUMBER
TOP CHORD 4 X 2 SYP No.2
BOT CHORD 4 X 2 SYP No.2
WEBS 4 X 2 SYP No.3

BRACING
TOP CHORD Structural wood sheathing directly applied or 6-0-0 oc purlins, except end verticals.
BOT CHORD Rigid ceiling directly applied or 6-0-0 oc bracing, Except: 10-0-0 oc bracing: 24-25.

REACTIONS (lb/size) 23=1151/0-1-8 (input: 0-3-8), 14=1071/0-1-8 (input: 0-7-10)
Max Grav 23=1161(LC 2), 14=1485(LC 3)

FORCES (lb) - Max. Comp./Max. Ten. - All forces 250 (lb) or less except when shown.
TOP CHORD 2-3=0/516, 3-4=-601/347, 4-5=-601/347, 5-6=-1564/133, 6-7=-1982/84, 7-8=-1982/84, 8-9=-1982/84, 9-10=-1526/277, 10-11=-529/595, 11-12=0/812
BOT CHORD 22-23=-516/0, 21-22=-211/1224, 20-21=-85/1880, 19-20=-84/1982, 18-19=-159/1875, 17-18=-159/1875, 16-17=-413/1171, 15-16=-413/1171, 14-15=-812/0
WEBS 3-23=-794/0, 11-14=-929/0, 3-22=0/987, 5-22=-916/0, 11-15=0/1026, 10-15=-959/0, 12-14=-975/0, 2-23=-473/0, 5-21=0/519, 6-21=-490/0, 6-20=-193/396, 10-17=0/573, 9-17=-550/0, 9-19=-181/469

NOTES
1) Unbalanced floor live loads have been considered for this design.
2) Recommend 2x6 strongbacks, on edge, spaced at 10-0-0 oc and fastened to each truss with 3-10d (0.131" X 3") nails. Strongbacks to be attached to walls at their outer ends or restrained by other means.
3) CAUTION, Do not erect truss backwards.
4) Hanger(s) or other connection device(s) shall be provided sufficient to support concentrated load(s) 462 lb down at 19-2-14 on top chord. The design/selection of such connection device(s) is the responsibility of others.
5) In the LOAD CASE(S) section, loads applied to the face of the truss are noted as front (F) or back (B).

LOAD CASE(S) Standard
1) Floor: Lumber Increase=1.00, Plate Increase=1.00
Uniform Loads (plf)
Vert: 13-25=-10, 1-12=-100
Concentrated Loads (lb)
Vert: 12=-126(F)

TOMAS PONCE
LICENSE
No. 50068
STATE OF
FLORIDA
PROFESSIONAL ENGINEER

FEB 2 4 2009

Job	Truss	Truss Type	Qty	Ply	BAYBURY 2-3CAR _FL
ELEV_2_3CAR	FF	FLOOR	4	1	ELEV BBR 2 & 3 CAR Job Reference (optional)

Maronda Homes Inc., Sanford, FL

7.110 s Dec 15 2008 MiTek Industries, Inc. Thu Feb 05 10:02:35 2009 Page 1

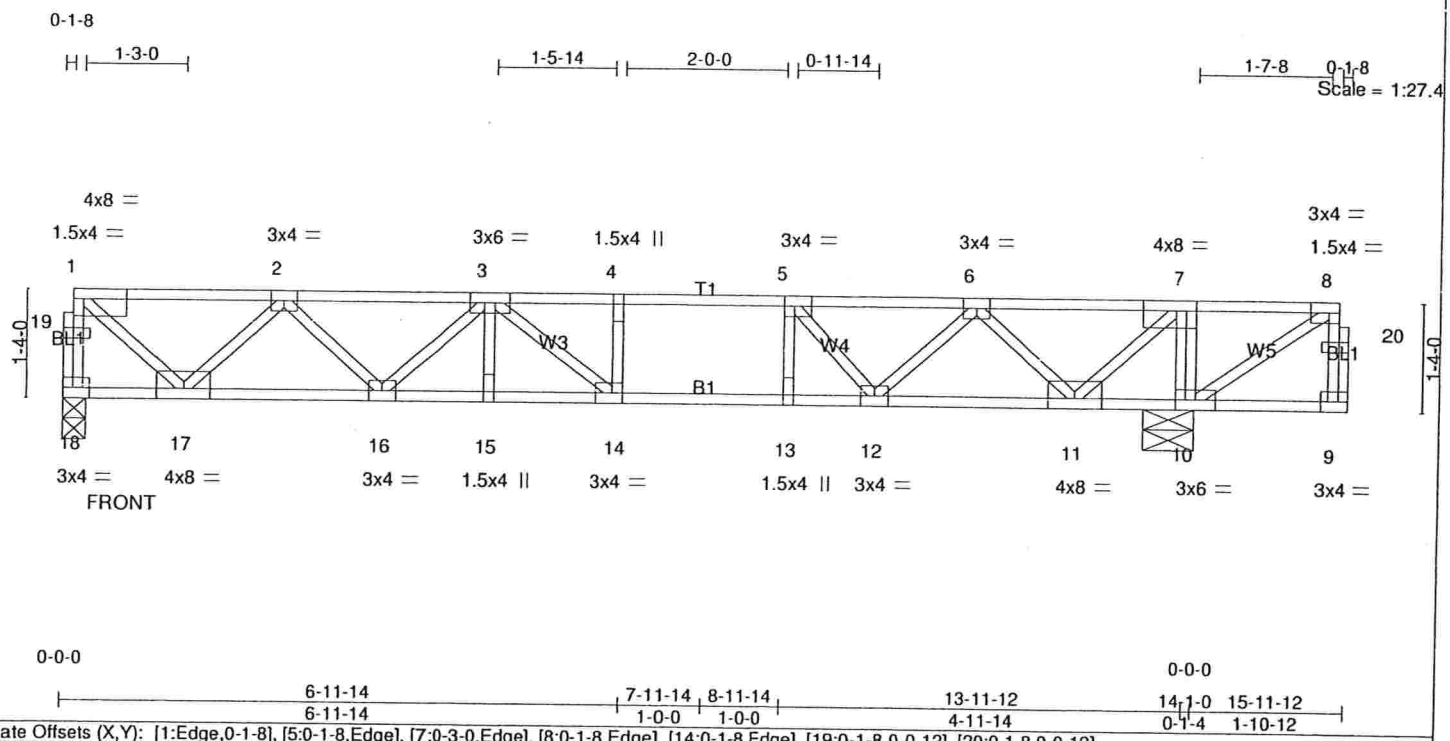

Plate Offsets (X,Y): [1:Edge,0-1-8], [5:0-1-8,Edge], [7:0-3-0,Edge], [8:0-1-8,Edge], [14:0-1-8,Edge], [19:0-1-8,0-0-12], [20:0-1-8,0-0-12]

LOADING (psf)		SPACING	2-0-0	CSI		DEFL	in	(loc)	l/defl	L/d	PLATES	GRIP
TCLL	40.0	Plates Increase	1.00	TC	0.73	Vert(LL)	-0.15	14-15	>999	480	MT20	244/190
TCDL	10.0	Lumber Increase	1.00	BC	0.87	Vert(TL)	-0.22	14-15	>757	360		
BCLL	0.0	Rep Stress Incr	NO	WB	0.39	Horz(TL)	0.03	10	n/a	n/a		
BCDL	5.0	Code FBC2007/TPI2002		(Matrix)							Weight: 86 lb	

LUMBER
TOP CHORD 4 X 2 SYP No.2
BOT CHORD 4 X 2 SYP No.1D
WEBS 4 X 2 SYP No.3

BRACING
TOP CHORD Structural wood sheathing directly applied or 6-0-0 oc purlins, except end verticals.
BOT CHORD Rigid ceiling directly applied or 6-0-0 oc bracing.

REACTIONS (lb/size) 18=726/0-1-8 (input: 0-3-8), 10=1118/0-1-8 (input: 0-7-10)
Max Grav 18=736(LC 2), 10=1173(LC 4)

FORCES (lb) - Max. Comp./Max. Ten. - All forces 250 (lb) or less except when shown.
TOP CHORD 18-19=-732/0, 1-19=-731/0, 1-2=-721/0, 2-3=-1670/0, 3-4=-1984/0, 4-5=-1984/0, 5-6=-1584/122, 6-7=-541/544, 7-8=0/808
BOT CHORD 16-17=0/1346, 15-16=0/2007, 14-15=0/2007, 13-14=0/1984, 12-13=0/1984, 11-12=-327/1179, 10-11=-808/0
WEBS 5-13=-12/334, 7-10=-906/0, 7-11=0/973, 8-10=-971/0, 1-17=0/928, 2-17=-870/0, 6-11=-890/0, 6-12=0/666, 5-12=-839/0, 2-16=0/450, 3-16=-458/0, 3-14=-406/297

NOTES
1) Unbalanced floor live loads have been considered for this design.
2) Recommend 2x6 strongbacks, on edge, spaced at 10-0-0 oc and fastened to each truss with 3-10d (0.131" X 3") nails. Strongbacks to be attached to walls at their outer ends or restrained by other means.
3) CAUTION, Do not erect truss backwards.
4) Hanger(s) or other connection device(s) shall be provided sufficient to support concentrated load(s) 462 lb down at 15-9-8 on top chord. The design/selection of such connection device(s) is the responsibility of others.
5) In the LOAD CASE(S) section, loads applied to the face of the truss are noted as front (F) or back (B).

LOAD CASE(S) Standard
1) Floor: Lumber Increase=1.00, Plate Increase=1.00
Uniform Loads (plf)
Vert: 9-18=-10, 1-8=-100
Concentrated Loads (lb)
Vert: 8=-126(F)

TOMAS PONCE
LICENSE
No. 50068
STATE OF
FLORIDA
PROFESSIONAL ENGINEER

FEB 2 4 2009

Job	Truss	Truss Type	Qty	Ply	BAYBURY 2-3CAR _FL
ELEV_2_3CAR	FG	FLOOR	4	1	ELEV BBR 2 & 3 CAR Job Reference (optional)

Maronda Homes Inc., Sanford, FL

7.110 s Dec 15 2008 MiTek Industries, Inc. Thu Feb 05 10:02:36 2009 Page 1

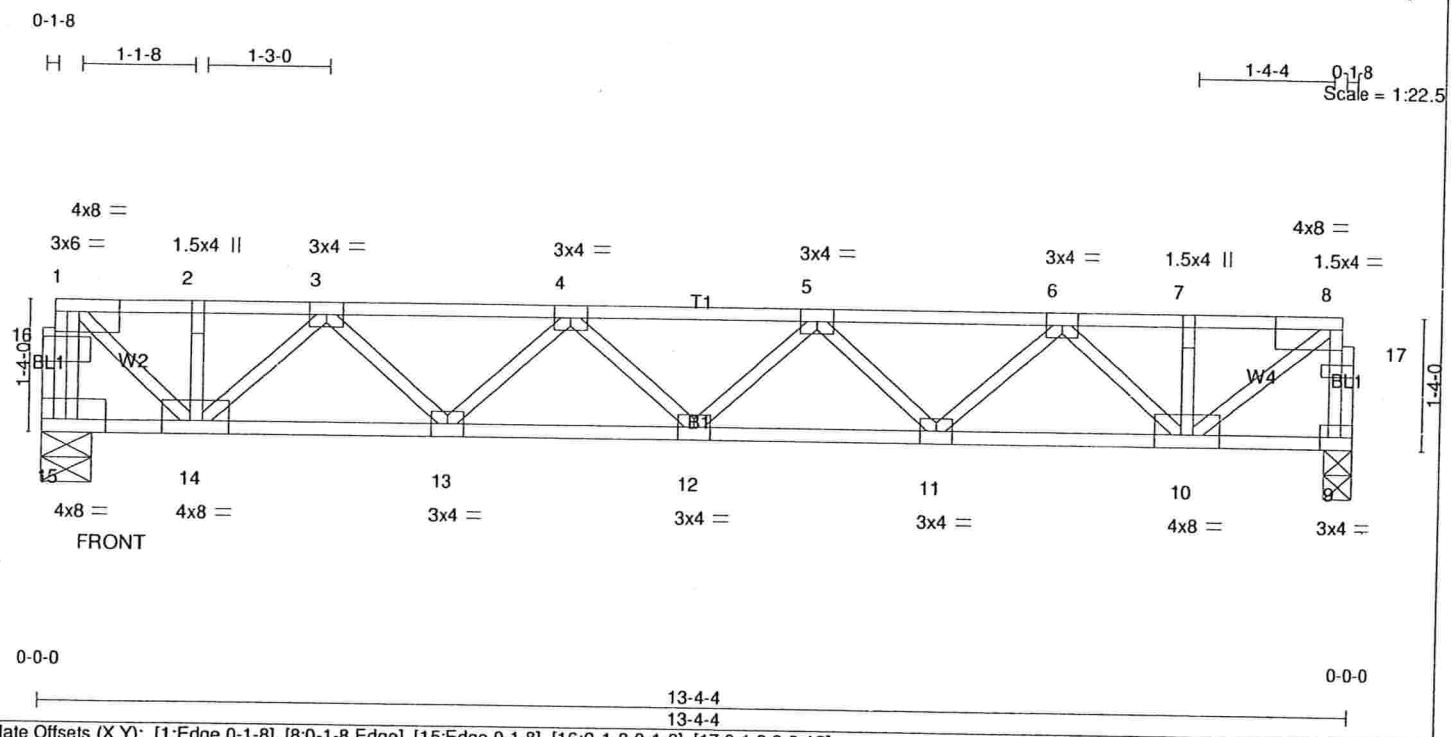

Plate Offsets (X,Y): [1:Edge,0-1-8], [8:0-1-8,Edge], [15:Edge,0-1-8], [16:0-1-8,0-1-8], [17:0-1-8,0-0-12]

LOADING (psf)		SPACING	2-0-0	CSI		DEFL	in	(loc)	l/defl	L/d	PLATES	GRIP
TCLL	40.0	Plates Increase	1.00	TC	0.25	Vert(LL)	-0.07	12	>999	480	MT20	244/190
TCDL	10.0	Lumber Increase	1.00	BC	0.49	Vert(TL)	-0.11	12	>999	360		
BCLL	0.0	Rep Stress Incr	NO	WB	0.41	Horz(TL)	0.03	9	n/a	n/a		
BCDL	5.0	Code FBC2007/TPI2002		(Matrix)							Weight: 75 lb	

LUMBER
TOP CHORD 4 X 2 SYP No.2
BOT CHORD 4 X 2 SYP No.2
WEBS 4 X 2 SYP No.3

BRACING
TOP CHORD Structural wood sheathing directly applied or 6-0-0 oc purlins, except end verticals.
BOT CHORD Rigid ceiling directly applied or 10-0-0 oc bracing.

REACTIONS (lb/size) 15=1166/0-1-8 (input: 0-6-6), 9=719/0-1-8 (input: 0-3-8)

FORCES (lb) - Max. Comp./Max. Ten. - All forces 250 (lb) or less except when shown.
TOP CHORD 15-16=-1165/0, 1-16=-1150/0, 9-17=-713/0, 8-17=-712/0, 1-2=-814/0, 2-3=-814/0, 3-4=-1662/0, 4-5=-1954/0, 5-6=-1668/0, 6-7=-828/0, 7-8=-828/0
BOT CHORD 13-14=0/1357, 12-13=0/1941, 11-12=0/1944, 10-11=0/1365
WEBS 3-14=-738/0, 3-13=0/425, 4-13=-387/0, 5-11=-384/0, 6-11=0/421, 6-10=-730/0, 8-10=0/1022, 1-14=0/943

NOTES
1) Recommend 2x6 strongbacks, on edge, spaced at 10-0-0 oc and fastened to each truss with 3-10d (0.131" X 3") nails. Strongbacks to be attached to walls at their outer ends or restrained by other means.
2) Hanger(s) or other connection device(s) shall be provided sufficient to support concentrated load(s) 462 lb down at 0-3-0 on top chord. The design/selection of such connection device(s) is the responsibility of others.
3) In the LOAD CASE(S) section, loads applied to the face of the truss are noted as front (F) or back (B).

LOAD CASE(S) Standard
1) Floor: Lumber Increase=1.00, Plate Increase=1.00
Uniform Loads (plf)
Vert: 9-15=-10, 1-8=-100
Concentrated Loads (lb)
Vert: 1=-462(F)

TOMAS PONCE
LICENSE
No. 50068
STATE OF
FLORIDA
PROFESSIONAL ENGINEER

FEB 2 4 2009

Job	Truss	Truss Type	Qty	Ply	BAYBURY 2-3CAR _FL
ELEV_2_3CAR	FJ	FLOOR	1	1	ELEV BBR 2 & 3 CAR Job Reference (optional)

Maronda Homes Inc., Sanford, FL

7.110 s Dec 15 2008 MiTek Industries, Inc. Thu Feb 05 10:02:38 2009 Page 1

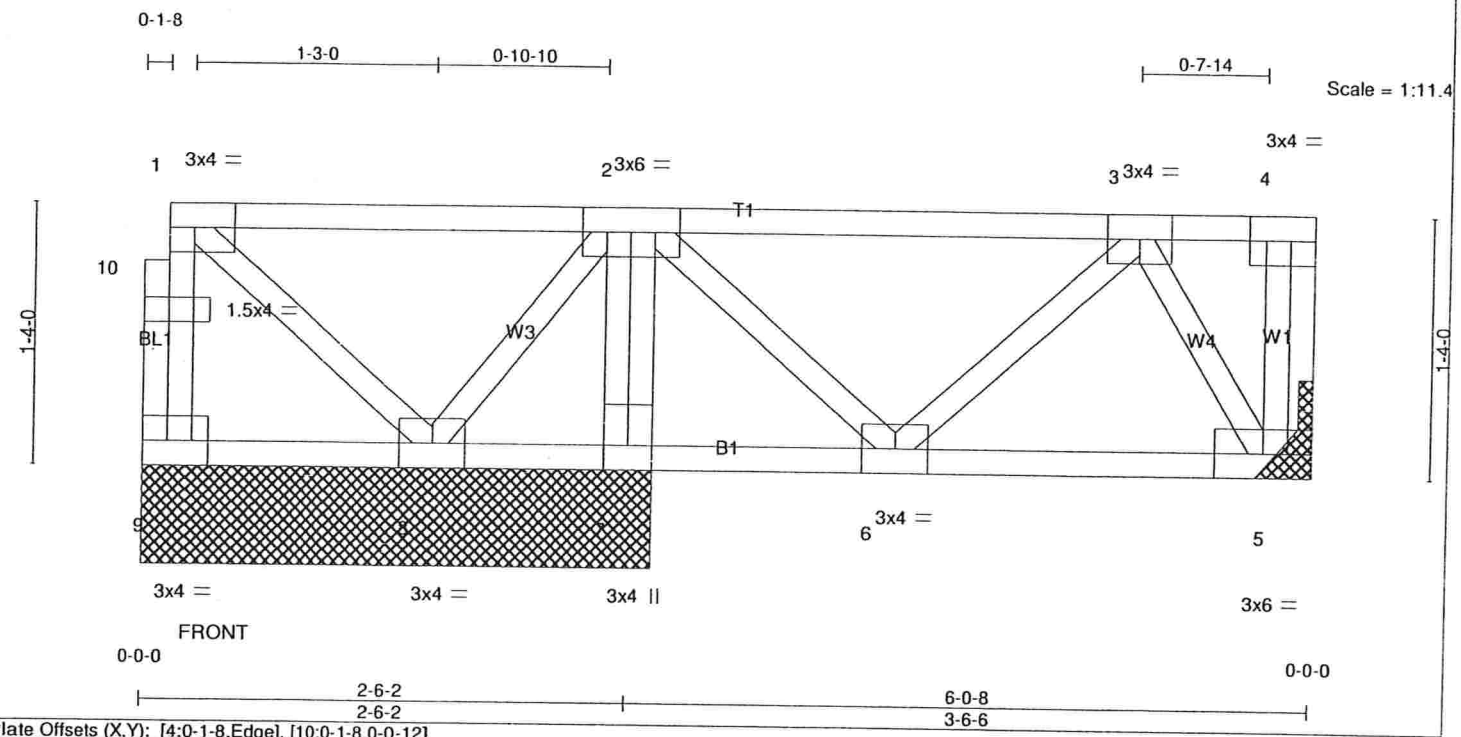

Plate Offsets (X,Y): [4:0-1-8,Edge], [10:0-1-8,0-0-12]

LOADING (psf)		SPACING	2-0-0	CSI		DEFL	in	(loc)	l/defl	L/d	PLATES	GRIP
TCLL	40.0	Plates Increase	1.00	TC	0.38	Vert(LL)	-0.00	6	>999	480	MT20	244/190
TCDL	10.0	Lumber Increase	1.00	BC	0.05	Vert(TL)	-0.00	5-6	>999	360		
BCLL	0.0	Rep Stress Incr	NO	WB	0.05	Horz(TL)	0.00	5	n/a	n/a		
BCDL	5.0	Code FBC2007/TPI2002		(Matrix)							Weight: 39 lb	

LUMBER
TOP CHORD 4 X 2 SYP No.2
BOT CHORD 4 X 2 SYP No.2
WEBS 4 X 2 SYP No.3

BRACING
TOP CHORD Structural wood sheathing directly applied or 6-0-0 oc purlins, except end verticals.
BOT CHORD Rigid ceiling directly applied or 6-0-0 oc bracing.

REACTIONS All bearings 2-7-10 except (jt=length) 5=Mechanical.
(lb) - Max Grav All reactions 250 lb or less at joint(s) 5, 8 except 9=504(LC 2), 7=304(LC 1)

FORCES (lb) - Max. Comp./Max. Ten. - All forces 250 (lb) or less except when shown.
TOP CHORD 9-10=-499/0, 1-10=-498/0
WEBS 2-7=-294/0

NOTES
1) Unbalanced floor live loads have been considered for this design.
2) Refer to girder(s) for truss to truss connections.
3) Recommend 2x6 strongbacks, on edge, spaced at 10-0-0 oc and fastened to each truss with 3-10d (0.131" X 3") nails. Strongbacks to be attached to walls at their outer ends or restrained by other means.
4) CAUTION, Do not erect truss backwards.
5) Hanger(s) or other connection device(s) shall be provided sufficient to support concentrated load(s) 462 lb down at 0-2-4 on top chord. The design/selection of such connection device(s) is the responsibility of others.
6) In the LOAD CASE(S) section, loads applied to the face of the truss are noted as front (F) or back (B).

LOAD CASE(S) Standard
1) Floor: Lumber Increase=1.00, Plate Increase=1.00
Uniform Loads (plf)
Vert: 5-9=-10, 1-4=-100
Concentrated Loads (lb)
Vert: 1=-462(F)

TOMAS PONCE
LICENSE
No. 50068
STATE OF
FLORIDA
PROFESSIONAL ENGINEER

FEB 2 4 2009

Job	Truss	Truss Type	Qty	Ply	BAYBURY 2-3CAR _FL
ELEV_2_3CAR	FK	FLOOR	2	1	ELEV BBR 2 & 3 CAR Job Reference (optional)

Maronda Homes Inc., Sanford, FL

7.110 s Dec 15 2008 MiTek Industries, Inc. Thu Feb 05 10:02:39 2009 Page 1

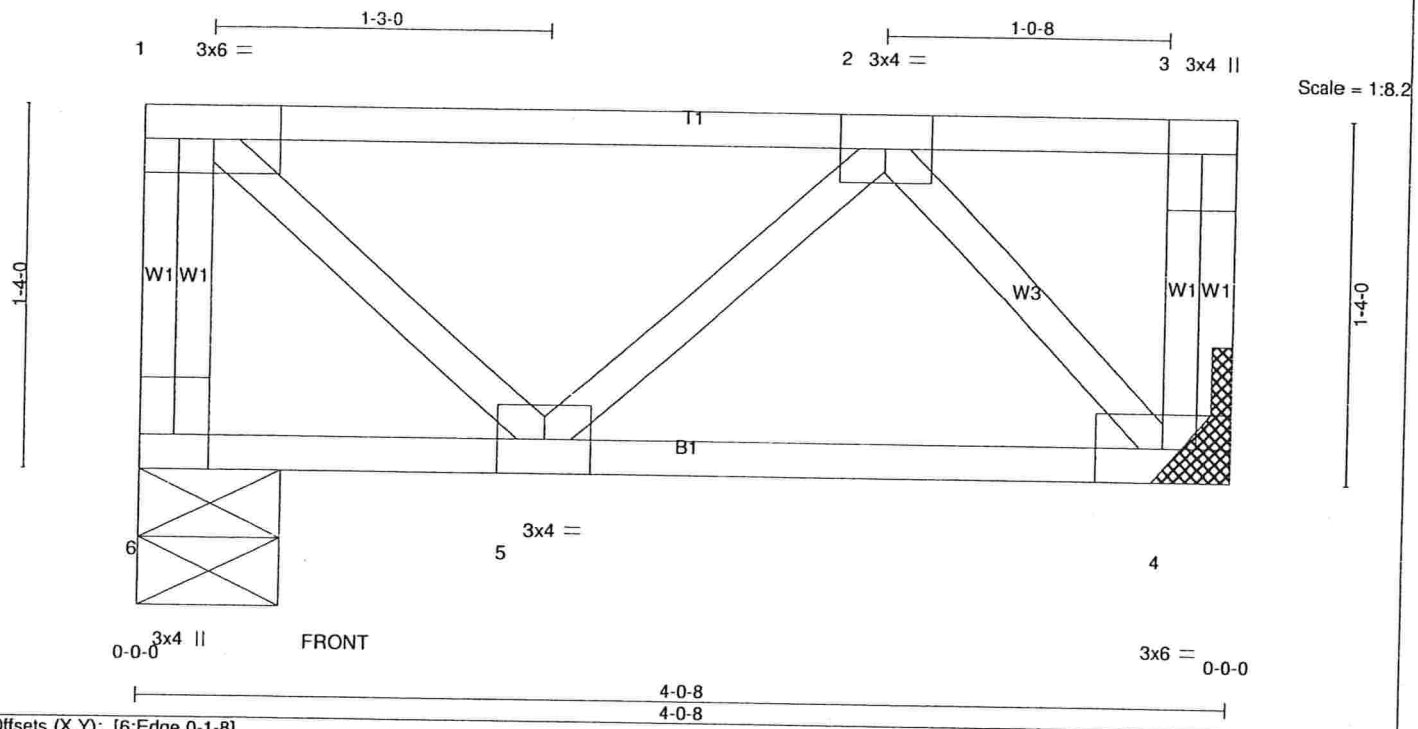

Plate Offsets (X,Y): [6:Edge,0-1-8]

LOADING (psf)		SPACING	2-0-0	CSI		DEFL	in	(loc)	l/defl	L/d	PLATES	GRIP
TCLL	40.0	Plates Increase	1.00	TC	0.35	Vert(LL)	-0.00	5	>999	480	MT20	244/190
TCDL	10.0	Lumber Increase	1.00	BC	0.07	Vert(TL)	-0.01	4-5	>999	360		
BCLL	0.0	Rep Stress Incr	NO	WB	0.06	Horz(TL)	0.00	4	n/a	n/a		
BCDL	5.0	Code FBC2007/TPI2002		(Matrix)							Weight: 26 lb	

LUMBER
TOP CHORD 4 X 2 SYP No.2
BOT CHORD 4 X 2 SYP No.2
WEBS 4 X 2 SYP No.3

BRACING
TOP CHORD Structural wood sheathing directly applied or 4-0-8 oc purlins, except end verticals.
BOT CHORD Rigid ceiling directly applied or 10-0-0 oc bracing.

REACTIONS (lb/size) 6=806/0-1-8 (input: 0-6-4), 4=209/Mechanical

FORCES (lb) - Max. Comp./Max. Ten. - All forces 250 (lb) or less except when shown.
TOP CHORD 1-6=-802/0
WEBS 2-4=-270/0

NOTES
1) Refer to girder(s) for truss to truss connections.
2) Recommend 2x6 strongbacks, on edge, spaced at 10-0-0 oc and fastened to each truss with 3-10d (0.131" X 3") nails. Strongbacks to be attached to walls at their outer ends or restrained by other means.
3) Hanger(s) or other connection device(s) shall be provided sufficient to support concentrated load(s) 597 lb down at 0-1-8 on top chord. The design/selection of such connection device(s) is the responsibility of others.
4) In the LOAD CASE(S) section, loads applied to the face of the truss are noted as front (F) or back (B).

LOAD CASE(S) Standard
1) Floor: Lumber Increase=1.00, Plate Increase=1.00
Uniform Loads (plf)
Vert: 4-6=-10, 1-3=-100
Concentrated Loads (lb)
Vert: 1=-597(F)

TOMAS PONCE
LICENSE
No. 50068
STATE OF
FLORIDA
PROFESSIONAL ENGINEER

FEB 2 4 2009

Job	Truss	Truss Type	Qty	Ply	BAYBURY 2-3CAR _FL
ELEV_2_3CAR	FI	FLOOR	1	1	ELEV BBR 2 & 3 CAR Job Reference (optional)

Maronda Homes Inc., Sanford, FL

7.110 s Dec 15 2008 MiTek Industries, Inc. Thu Feb 05 10:02:37 2009 Page 1

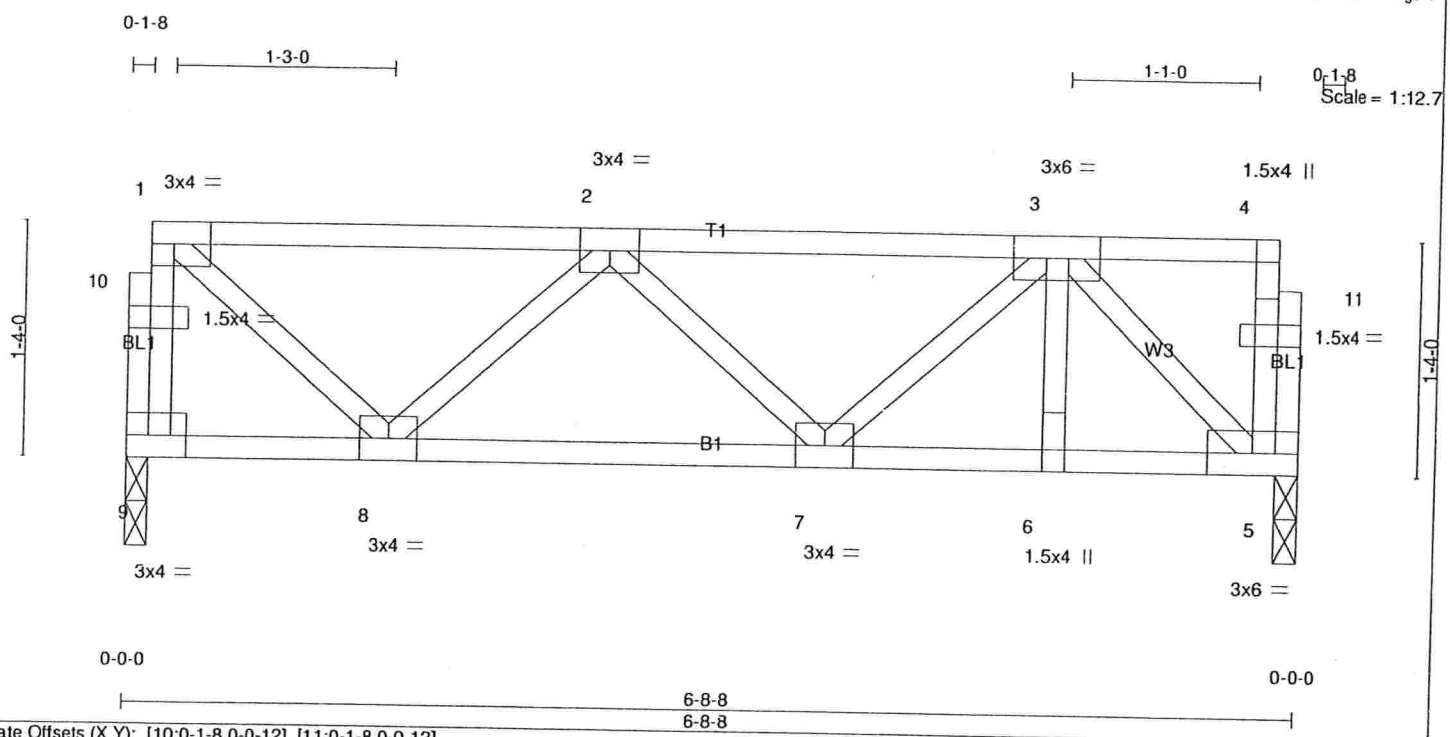

Plate Offsets (X,Y): [10:0-1-8,0-0-12], [11:0-1-8,0-0-12]

LOADING (psf)		SPACING	2-0-0	CSI		DEFL	in	(loc)	l/defl	L/d	PLATES	GRIP
TCLL	40.0	Plates Increase	1.00	TC	0.34	Vert(LL)	-0.01	7	>999	480	MT20	244/190
TCDL	10.0	Lumber Increase	1.00	BC	0.12	Vert(TL)	-0.01	7-8	>999	360		
BCLL	0.0	Rep Stress Incr	YES	WB	0.14	Horz(TL)	0.00	5	n/a	n/a		
BCDL	5.0	Code FBC2007/TPI2002		(Matrix)							Weight: 39 lb	

LUMBER
TOP CHORD 4 X 2 SYP No.2
BOT CHORD 4 X 2 SYP No.2
WEBS 4 X 2 SYP No.3

BRACING
TOP CHORD Structural wood sheathing directly applied or 6-0-0 oc purlins, except end verticals.
BOT CHORD Rigid ceiling directly applied or 10-0-0 oc bracing.

REACTIONS (lb/size) 9=349/0-1-8 (input: 0-1-8), 5=349/0-1-8 (input: 0-1-8)

FORCES (lb) - Max. Comp./Max. Ten. - All forces 250 (lb) or less except when shown.
TOP CHORD 9-10=-345/0, 1-10=-344/0, 1-2=-283/0, 2-3=-434/0
BOT CHORD 7-8=0/513, 6-7=0/329, 5-6=0/329
WEBS 1-8=0/360, 2-8=-320/0, 3-5=-451/0

NOTES
1) Provide mechanical connection (by others) of truss to bearing plate at joint(s) 9, 5.
2) Recommend 2x6 strongbacks, on edge, spaced at 10-0-0 oc and fastened to each truss with 3-10d (0.131" X 3") nails. Strongbacks to be attached to walls at their outer ends or restrained by other means.

LOAD CASE(S) Standard

TOMAS PONCE
LICENSE
No. 50068
STATE OF
FLORIDA
PROFESSIONAL ENGINEER

FEB 2 4 2009

CERTIFICATE OF

OCCUPANCY

COLUMBIA COUNTY, FLORIDA

Department of Building and Zoning Inspection

This Certificate of Occupancy is issued to the below named permit holder for the building and premises at the below named location, and certifies that the work has been completed in accordance with the Columbia County Building Code.

Parcel Number 10-4S-16-02856-131

Building permit No. 000027942

Use Classification SFD,UTILITY

Fire: 77.00

Permit Holder TED BROCK

Waste: 201.00

Owner of Building MARONDA HOMES

Total: 278.00

Location: 330 SW MULBERRY DRIVE, LAKE CITY, FL

Date: 10/28/2009

Building Inspector

POST IN A CONSPICUOUS PLACE
(Business Places Only)

PROPOSED BUILDING LAYOUT

IN SECTION 10, TOWNSHIP 4 SOUTH, RANGE 16 EAST, COLUMBIA COUNTY, FLORIDA

30 0 30 60 90

1" = 30'

LEGAL DESCRIPTION:

LOT THIRTY-ONE (31) OF "TIMBERLANDS" AS PER PLAT THEREOF, AS RECORDED IN PLAT BOOK '9', PAGE 27 OF THE PUBLIC RECORDS OF COLUMBIA COUNTY, FLORIDA.

N W E S

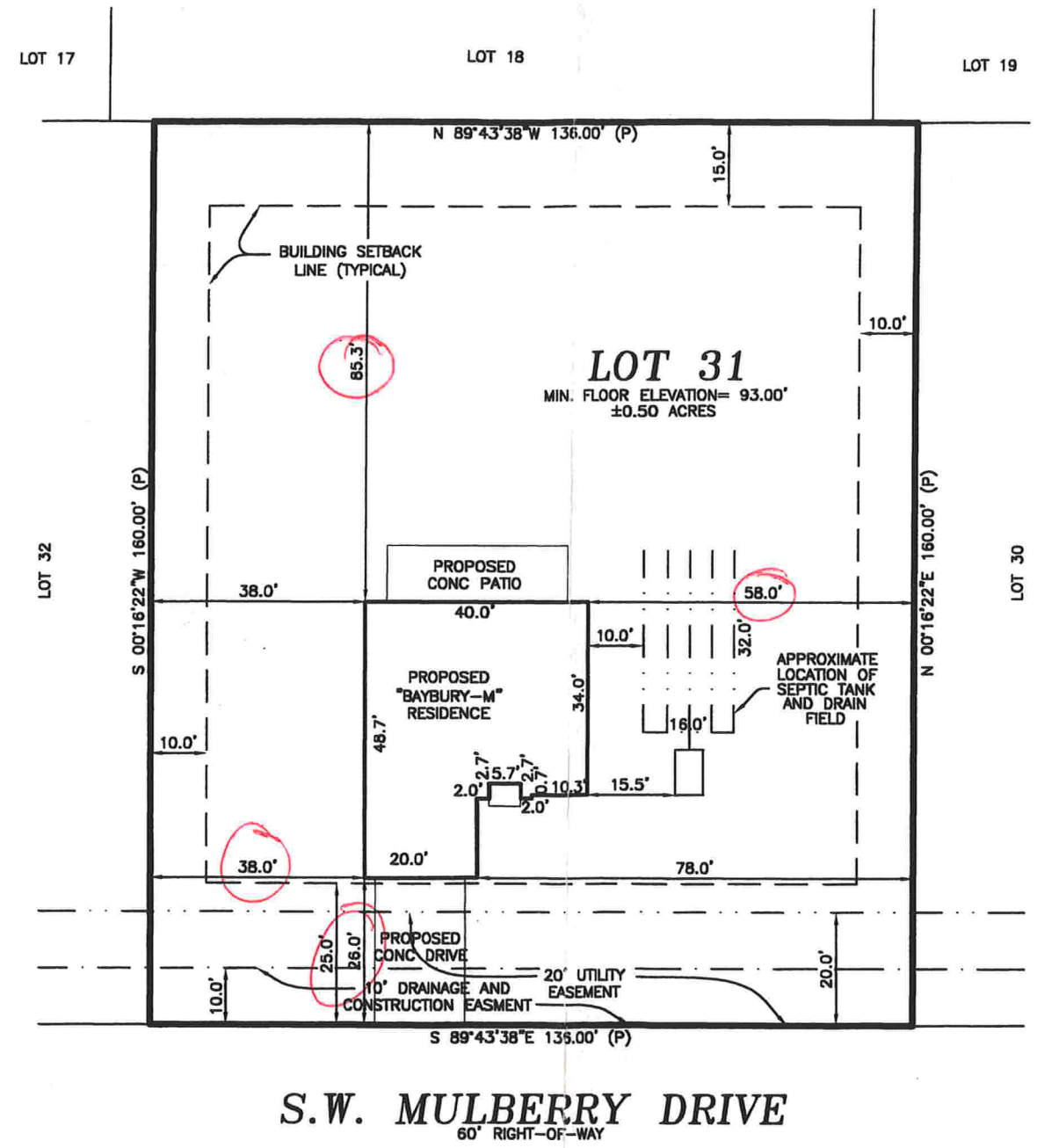

CERTIFIED TO:

1) MARONDA HOMES

BUILDING SETBACK NOTE:

BUILDING SETBACK INFORMATION FOR "TIMBERLANDS" IS AS FOLLOWS: FRONT 25', REAR 15', SIDE 10'

BENCHMARK NOTE:

ELEVATIONS SHOWN HEREON ARE BASED UPON A BENCHMARK SET IN A 8" PINE AT THE FRONT OF LOT 2, WITH AN ELEVATION OF 98.76'. THIS INFORMATION WAS PROVIDED TO THIS SURVEYOR BY BRITT SURVEYING (PLATTING SURVEYOR) DATUM UNKNOWN.

SURVEYOR NOTES:

1) TO THE BEST OF MY KNOWLEDGE, THERE ARE NO ENCROACHMENTS, BOUNDARY LINE DISPUTES, EASEMENTS, OR CLAIMS OF EASEMENTS, OTHER THAN ARE DEPICTED ON THIS DRAWING.
2) ALL UTILITIES AND OR IMPROVEMENTS, IF ANY, MAY NOT BE SHOWN ON THIS DRAWING.
3) IN THE OPINION OF THIS SURVEYOR THE BOUNDARY SHOWN HEREON BEST REPRESENTS THE LOCATION OF THE SUBJECT PROPERTY IN RELATION TO THE DESCRIPTION AND THOSE PROPERTY CORNERS FOUND TO BE ACCEPTABLE TO THIS SURVEYOR.
4) BUILDING SETBACK LINES DEPICTED HEREON ARE SHOWN AS PER THE RECORD PLAT, BUT ARE SUBJECT TO CHANGE. PRIOR TO ANY NEW CONSTRUCTION, THE APPROPRIATE GOVERNING AUTHORITY SHOULD BE CONTACTED FOR THE CURRENT SETBACK REQUIREMENTS.
5) THIS MAP OF SURVEY REFLECTS CONDITIONS LOCATED AS OF THE DATE OF FIELD WORK COMPLETION (SEE TITLE BLOCK).
6) AREAS OF ENVIRONMENTAL CONCERN HAVE NOT BEEN LOCATED BY THIS SURVEYOR, UNLESS OTHERWISE DEPICTED HEREON.

FLOOD NOTE:

IN THE OPINION OF THIS SURVEYOR, ACCORDING TO THE NATIONAL FLOOD INSURANCE PROGRAM, FLOOD INSURANCE RATE MAP COMMUNITY PANEL NO. 120070-0175-B, DATED 1-6-88, THIS PROPERTY IS IN FLOOD ZONE "X" WHICH IS AN AREA DETERMINED TO BE OUTSIDE 500-YEAR FLOOD PLAIN, AS SCALED FROM SAID MAP. INFORMATION FROM THE FEDERAL EMERGENCY MANAGEMENT AGENCY (FEMA) FLOOD INSURANCE RATE MAPS, SHOWN ON THIS MAP, WAS CURRENT AS OF THE REFERENCED DATE. MAP REVISIONS AND AMENDMENTS ARE PERIODICALLY MADE BY LETTER AND MAY NOT BE REFLECTED ON THE MOST CURRENT MAP.

TITLE NOTE:

THIS SURVEY IS SUBJECT TO ANY FACTS THAT MAY BE DISCLOSED BY A FULL AND ACCURATE TITLE SEARCH. THIS SURVEYOR HAS NOT PERFORMED A SEARCH OF THE PUBLIC RECORDS ON THIS PARCEL FOR ANY CLAIMS OF TITLE, EASEMENTS, OR RESTRICTIONS THAT MAY EFFECT THIS PARCEL. THE PRESENCE OR ABSENCE OF ANY SUCH CLAIMS ARE NOT CERTIFIED HEREON.

LEGEND:

- ● = FOUND 1/2" REBAR NO IDENTIFICATION
- ⊙ = FOUND 1/2" REBAR & CAP L.B. 6894
- ○ = SET 1/2" REBAR & CAP L.B. 6894
- ⊘ = FOUND 3/4" IRON PIPE
- ■ = FOUND 4" X 4" CONC. MON. NO IDENTIFICATION
- □ = SET 4" X 4" CONC. MON. P.S.M. 5582
- ✕ = SET NAIL & DISK P.S.M. 5582
- ✕ = FOUND NAIL & DISK
- ⊠ = FOUND 6" X 6" S.R.D. R/W MON.
- ⊟ = CATV RISER
- ⊡ = TELEPHONE PEDESTAL
- ⊘ = WOOD POWER POLE

ABBREVIATIONS:

A/C = AIR CONDITIONER
ASPH = ASPHALT
C = CALCULATED FROM MEASURED
CATV = CABLE TELEVISION
C/B = CONCRETE BLOCK
CLF = CHAIN LINK FENCE
CM = CONCRETE MONUMENT
CONC = CONCRETE
ELEC = ELECTRIC
ELEV = ELEVATION
FND = FOUND
FNC = FENCE
LB = LICENSED SURVEYOR BUSINESS
(M) = FIELD MEASURED
MH = MANHOLE
O.U. = OVERHEAD UTILITIES
P = PLAT
PB = PLAT BOOK
P.U.E. = PUBLIC UTILITIES EASEMENT
TRANS = TRANSFORMER
TYP = TYPICAL
WM = WATER METER
WV = WATER VALVE

THIS IS NOT A BOUNDARY SURVEY

CERTIFICATE OF SURVEYOR:

NOT VALID WITHOUT THE SIGNATURE AND THE ORIGINAL RAISED SEAL OF A FLORIDA LICENSED SURVEYOR AND MAPPER. ADDITIONS OR DELETIONS TO THIS MAP BY ANYONE OTHER THAN THIS SURVEYOR IS PROHIBITED.

I HEREBY CERTIFY THAT THE SURVEY DATA SHOWN HEREON, IS A TRUE AND CORRECT REPRESENTATION OF A SURVEY PERFORMED UNDER MY SUPERVISION OF THE HEREON DESCRIBED PROPERTY, AND IT MEETS THE MINIMUM TECHNICAL STANDARDS AS SET FORTH BY THE FLORIDA BOARD OF LAND SURVEYORS, PURSUANT TO SECTION 472.027, FLORIDA STATUTES, AND CHAPTER 61G17-6, FLORIDA ADMINISTRATIVE CODE.

BY: _____
JAMES E. BRINKMAN, PSM - FLA. CERT# 5582

DATE: 6/23/09

BRINKMAN SURVEYING & MAPPING INC.

4607 NW 6th STREET SUITE C, GAINESVILLE, FL. 32609

PHONE: (352) 374-7707 FAX: (352) 374-8757

SCALE: 1" = 30'	"THE BENCHMARK IN QUALITY SERVICE"	DRAWN BY: J.D.M.
DATE: 5/28/2009		CHECKED BY: J.B.
FIELD WORK COMPLETED ON **** FIELDBOOK **, PAGE **		
PREPARED FOR: MARONDA		DRAWING NUMBER 081-09

27942

BOUNDARY SURVEY

IN SECTION 10, TOWNSHIP 4 SOUTH, RANGE 16 EAST, COLUMBIA COUNTY, FLORIDA

30 0 30 60 90

1" = 30'

LEGAL DESCRIPTION:

LOT THIRTY-ONE (31) OF "TIMBERLANDS" AS PER PLAT THEREOF, AS RECORDED IN PLAT BOOK '9', PAGE 27 OF THE PUBLIC RECORDS OF COLUMBIA COUNTY, FLORIDA.

CERTIFIED TO:

1) MARONDA HOMES

BEARING NOTE:

BEARINGS SHOWN HEREON ARE REFERRED TO AN ASSUMED VALUE OF S. 89°43'38" W., FOR THE CENTERLINE OF S.W. MULBERRY DRIVE.

BUILDING SETBACK NOTE:

BUILDING SETBACK INFORMATION FOR "TIMBERLANDS" IS AS FOLLOWS: FRONT 25', REAR 15', SIDE 10'

BENCHMARK NOTE:

ELEVATIONS SHOWN HEREON ARE BASED UPON A BENCHMARK SET IN A 8" PINE AT THE FRONT OF LOT 2, WITH AN ELEVATION OF 98.76'. THIS INFORMATION WAS PROVIDED TO THIS SURVEYOR BY BRITT SURVEYING (PLATTING SURVEYOR) DATUM UNKNOWN.

SURVEYOR NOTES:

1) TO THE BEST OF MY KNOWLEDGE, THERE ARE NO ENCROACHMENTS, BOUNDARY LINE DISPUTES, EASEMENTS, OR CLAIMS OF EASEMENTS, OTHER THAN ARE DEPICTED ON THIS DRAWING.
2) ALL UTILITIES AND OR IMPROVEMENTS, IF ANY, MAY NOT BE SHOWN ON THIS DRAWING.
3) IN THE OPINION OF THIS SURVEYOR THE BOUNDARY SHOWN HEREON BEST REPRESENTS THE LOCATION OF THE SUBJECT PROPERTY IN RELATION TO THE DESCRIPTION AND THOSE PROPERTY CORNERS FOUND TO BE ACCEPTABLE TO THIS SURVEYOR.
4) BUILDING SETBACK LINES DEPICTED HEREON ARE SHOWN AS PER THE RECORD PLAT, BUT ARE SUBJECT TO CHANGE. PRIOR TO ANY NEW CONSTRUCTION, THE APPROPRIATE GOVERNING AUTHORITY SHOULD BE CONTACTED FOR THE CURRENT SETBACK REQUIREMENTS.
5) THIS MAP OF SURVEY REFLECTS CONDITIONS LOCATED AS OF THE DATE OF FIELD WORK COMPLETION (SEE TITLE BLOCK).
6) AREAS OF ENVIRONMENTAL CONCERN HAVE NOT BEEN LOCATED BY THIS SURVEYOR, UNLESS OTHERWISE DEPICTED HEREON.

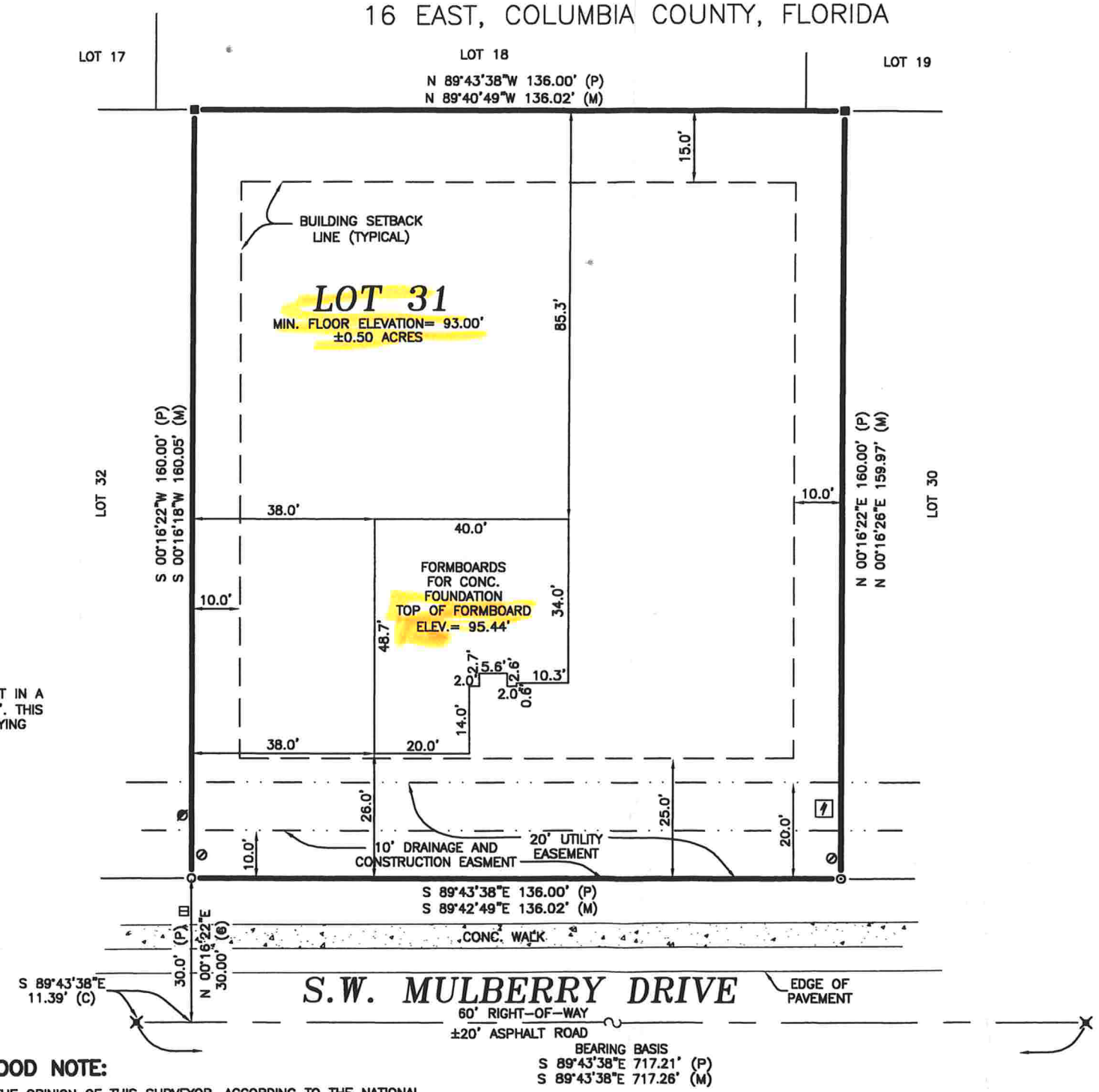

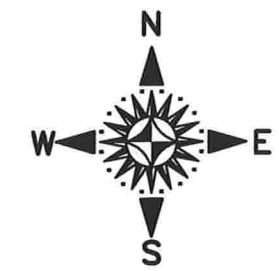

LEGEND:

- ⊙ = FOUND 1/2" REBAR & CAP L.B. 6894
- o = SET 1/2" REBAR & CAP L.B. 6894
- ■ = FOUND 4" X 4" CONC. MON. P.S.M. 5757
- X = FOUND NAIL & DISK P.S.M. 5757
- ⊟ = CATV RISER
- ⊘ = TELEPHONE HANDHOLE
- ⌀ = FIBERGLASS LIGHT POLE
- [ϟ] = ELECTRIC TRANSFORMER

ABBREVIATIONS:

A/C = AIR CONDITIONER
ASPH = ASPHALT
C = CALCULATED FROM MEASURED
CATV = CABLE TELEVISION
C/B = CONCRETE BLOCK
CLF = CHAIN LINK FENCE
CM = CONCRETE MONUMENT
CONC = CONCRETE
ELEC = ELECTRIC
ELEV = ELEVATION
FND = FOUND
FNC = FENCE
LB = LICENSED SURVEYOR BUSINESS
(M) = FIELD MEASURED
MH = MANHOLE
O.U. = OVERHEAD UTILITIES
P = PLAT
PB = PLAT BOOK
P.U.E. = PUBLIC UTILITIES EASEMENT
TRANS = TRANSFORMER
TYP = TYPICAL
WM = WATER METER
WV = WATER VALVE

FLOOD NOTE:

IN THE OPINION OF THIS SURVEYOR, ACCORDING TO THE NATIONAL FLOOD INSURANCE PROGRAM, FLOOD INSURANCE RATE MAP COMMUNITY PANEL NO. 120070-0175-B, DATED 1-6-88, THIS PROPERTY IS IN FLOOD ZONE "X" WHICH IS AN AREA DETERMINED TO BE OUTSIDE 500-YEAR FLOOD PLAIN, AS SCALED FROM SAID MAP. INFORMATION FROM THE FEDERAL EMERGENCY MANAGEMENT AGENCY (FEMA) FLOOD INSURANCE RATE MAPS, SHOWN ON THIS MAP, WAS CURRENT AS OF THE REFERENCED DATE. MAP REVISIONS AND AMENDMENTS ARE PERIODICALLY MADE BY LETTER AND MAY NOT BE REFLECTED ON THE MOST CURRENT MAP.

TITLE NOTE:

THIS SURVEY IS SUBJECT TO ANY FACTS THAT MAY BE DISCLOSED BY A FULL AND ACCURATE TITLE SEARCH. THIS SURVEYOR HAS NOT PERFORMED A SEARCH OF THE PUBLIC RECORDS ON THIS PARCEL FOR ANY CLAIMS OF TITLE, EASEMENTS, OR RESTRICTIONS THAT MAY EFFECT THIS PARCEL. THE PRESENCE OR ABSENCE OF ANY SUCH CLAIMS ARE NOT CERTIFIED HEREON.

CERTIFICATE OF SURVEYOR:

NOT VALID WITHOUT THE SIGNATURE AND THE ORIGINAL RAISED SEAL OF A FLORIDA LICENSED SURVEYOR AND MAPPER. ADDITIONS OR DELETIONS TO THIS MAP BY ANYONE OTHER THAN THIS SURVEYOR IS PROHIBITED.

I HEREBY CERTIFY THAT THE SURVEY DATA SHOWN HEREON, IS A TRUE AND CORRECT REPRESENTATION OF A SURVEY PERFORMED UNDER MY SUPERVISION OF THE HEREON DESCRIBED PROPERTY, AND IT MEETS THE MINIMUM TECHNICAL STANDARDS AS SET FORTH BY THE FLORIDA BOARD OF LAND SURVEYORS, PURSUANT TO SECTION 472.027, FLORIDA STATUTES, AND CHAPTER 61G17-6, FLORIDA ADMINISTRATIVE CODE.

BY: _____
JAMES E. BRINKMAN, PSM - FLA. CERT# 5582
DATE: 7/30/09

BRINKMAN SURVEYING & MAPPING INC.
4607 NW 6th STREET SUITE C, GAINESVILLE, FL. 32609
PHONE: (352) 374-7707 FAX: (352) 374-8757

SCALE: 1" = 30'	"THE BENCHMARK IN QUALITY SERVICE"	DRAWN BY: J.D.M.
DATE: 7/30/2009		CHECKED BY: J.B.
FIELD WORK COMPLETED ON 7/24/2009	FIELDBOOK 101, PAGE 76	
PREPARED FOR: MARONDA		DRAWING NUMBER 081-09

Casey

HOMETEAM
PEST DEFENSE®

TREATMENT WORKORDER

☐ Termite Baiting System w/Tubes-under-the slab

☐ Treat Only ☒ Tubes-under-the slab and Treat ☐ Bora-Care

DATE CALLED IN:		DATE OF SCHEDULE:	8-5
TIME CALLED IN:		TIME SCHEDULE:	9:00

JOB NAME: Maunda SUBDIVISION: Timberland

JOB ADDRESS: 330 SW Mulberry Dr.

BILLING NAME: BILLING PHONE:

BILLING ADDRESS:

CALLED IN BY: PHONE: PERMIT NUMBER: 27942

LOT & MODEL NUMBER: Lot 31

DATE & TIME COMPLETED: 8/5/09 9:25am

SQUARE FOOT: 1962 LINEAR FOOT: BLOCKVOIDS:

SLAB TYPE: mono TYPE OF FILL: sand/dirt

APPROX. DEPTH OF FOOTING: Outside: Inside:

☐ Addition ☐ Spot Treat ☐ Pool Addition ☐ Driveway

☐ Final/Completion ☐ Other

PESTICIDE USED: Imaxx Pro TOTAL APPLIED: 100 gal

PERCENT (%) USED: .1% STICKER POSTED: yes

PRICE PER SQ. FT. =	TOTAL FOR P.T.		
	ADDITIONAL		
	TAX:		
/ /	TOTAL AMOUNT	$	

X X TECHNICIAN: Casey

I hereby acknowledge the satisfactory completion of the above described work.

GT 23 / TCI 12/05